Grinotex® External Venetian Blinds.
Technology, options, applications.



GRIESSER



Griesser. Grinotex® External Venetian Blinds.





Grinotex® Venetian blinds.

There are various ways to save energy. One of them is called Grinotex®. Thanks to sealing lips, the slat blinds can be closed tightly. Grinotex® is a high-performance adjustable solar shade that provides optimum light regulation, and can effectively block the light entering your rooms. Grinotex® advantage: an encased stain-less-steel cable is used rather than textile, for incredible strength and guaranteed durability.

Optimum light management.
Grinotex® slats can be set to any angle. So you can decide how much light to let into each room. Children, for instance, are known to learn better in natural light.

Save energy.
Save up to 40% energy in summer and reduce your heating costs in winter thanks to intelligent daylight control. You can find the latest studies and research results on this topic here: www.es-so.com

Unobstructed views.
Daylight has a huge effect on the productivity, the health and the general well-being of anyone working in an indoor environment.

Outstanding design.
Opt for style. With its vast range of venetian blind models, systems and options, Griesser is a byword for sleek and straightforward design.

High wind resistance.
Griesser's venetian blinds are provenly wind-resistant, with some models capable of withstanding wind strengths of 92 km/h or more.

Technical highlights.

With their self-supporting construction, Grinotex® Venetian blinds are made to stand strong. Their very robust slat profile offers both outstanding elegance and an ideal means of setting architectural accents. And at 20,000 cycles, Griesser subjects its Grinotex® products to twice the tests required under the applicable norms.



1 A self-supporting blind system up to 2 m width.
Facade insulation remains intact and noise transmissions are reduced.



2 Durability.
A sheathed, durable and robust steel cable is used for turning the slats.



3 Safety locking.
Grinotex®'s anti-intrusion safety locking functions in every blind position.



4 Safety sensing edge.
The built-in safety sensing edge ensures that the blind will stop as soon as it encounters any obstacle.





5 Soft closing as standard.
With its gentle movement, Comfort Drive enables the slats to be precisely positioned and ensures exact light regulation, while the slow speed approaching final position makes closing the blind an almost silent operation.



6 Work Setting as an option.
With the Work Setting, the system's slats will maintain an angle of around 48 degrees as the blind is lowered, to avoid the inconvenient darkening of the room during the lowering process.

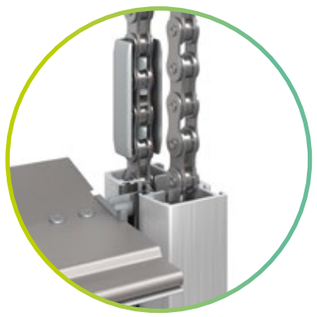

7 Lift integrated in the guides.
Protected from the weather, the lift chain is invisible from the outside. This eliminates the lifting belts in the middle of the slat.

Installation locations.

Grinotex® is a highly versatile system that can be installed in a wide range of construction contexts and will fit perfectly into virtually any facade.



1 **Grinotex® with cover.**
2 If no header niche is available, the whole system housing can be concealed behind a cover.

3 **On the facade.**
4 With appropriate bracketing, Grinotex® products can be installed directly onto (and slightly protruding from) the facade. Various cover options are available to ensure an optimum visual finish.

5 **Grinotex® Standard.**
In header niche.

6 **Grinotex® Sinus.**
In header niche.

7 **Grinotex® Fix combined.**
Multiple products used side by side can also be combined. Up to three products can be connected in this way, up to a maximum width of 10 m and a maximum area of 8 m². The prime benefit of such combined units: they only require a single drive.

Options.

With the available options, you can modify your product according to your ideas and to your individual requirements.

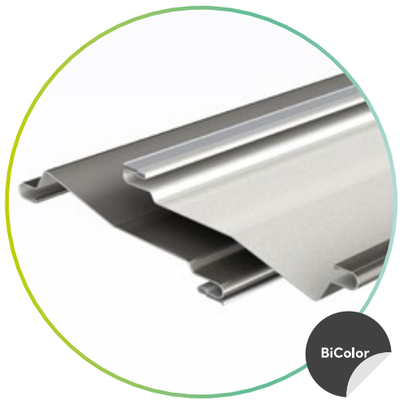

BiColor.
With our BiColor option, you can choose one color for the outward side of your slats that helps your blinds fit harmoniously into your building's facade, and another color for the inward side that matches the tones of your room.
Exclusively from Griesser.

Note: With the BiColor version, a narrow strip of the outer color is visible on the inside of the blind for each slat.

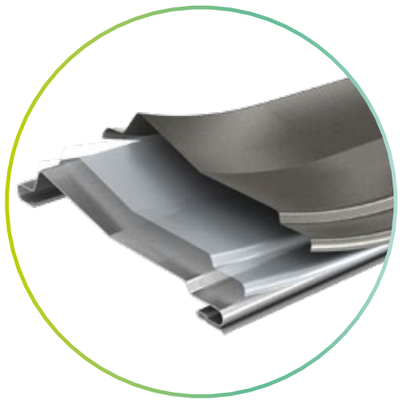

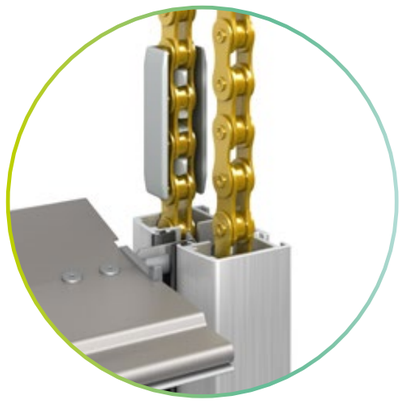

Protect^{PLUS}.
Challenging air conditions by the sea or in locations with extensive air pollution can make great demands on slatted products. Additional coatings on the slats concerned can protect them from filiform corrosion. Nickel-plated chains are used instead of the standard type.

Variants.

Grinotex® is available in different variants, which means that it can be optimally customized to your needs.



Grinotex® Standard.

- Robust profile with sealing lip.
- Curved and double-flanged, 96 mm wide.



Grinotex® Sinus.

- Sinus slats deliver up to 50% more daylight into the interior.
- With their wave-like form, the slats better direct light up to the ceiling while avoiding lower-level glare.
- Curved and double-flanged, 89 mm wide.

Covers. **Open header.**

1.1 Straight cover.

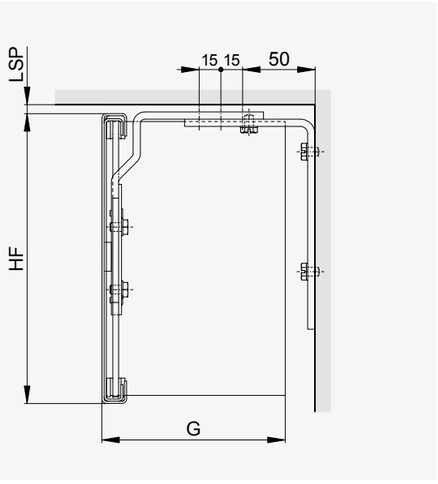

Corner connections	possible
Closing panel	loose or fixed
Clip, fastening	at top or rear

1.3 Straight cover.

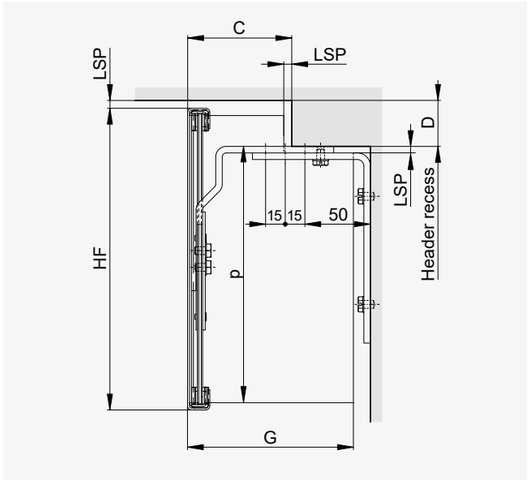

Corner connections	possible
Closing panel	loose or fixed
Clip, fastening	at top or rear

7.1 Soffit from 60 mm.

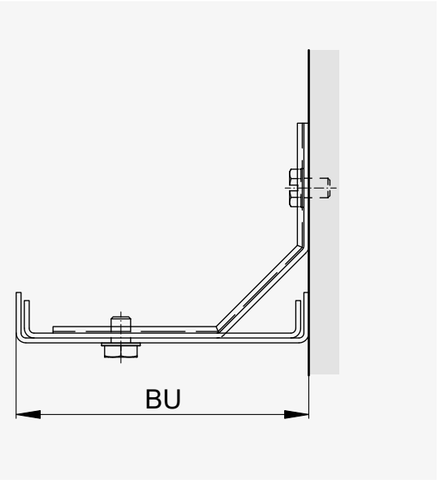

Corner connections	none
Clip, fastening	at rear or at front on clip

Covers. **Facade.**

8.1 Porch cover.

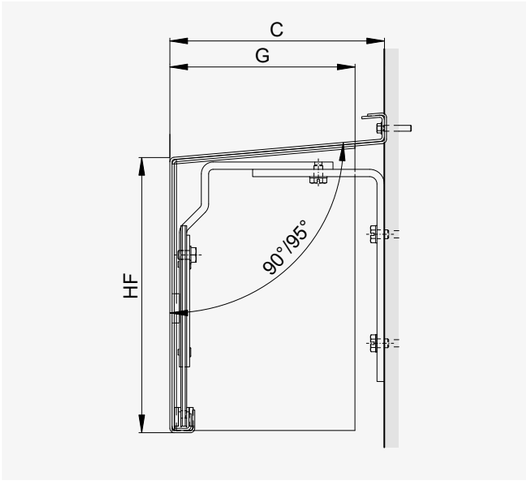

Corner connections	possible
Closing panel	loose or fixed
Clip, fastening	at rear
Option	with 90° (Depth C)

8.2 Porch cover below weatherboard.

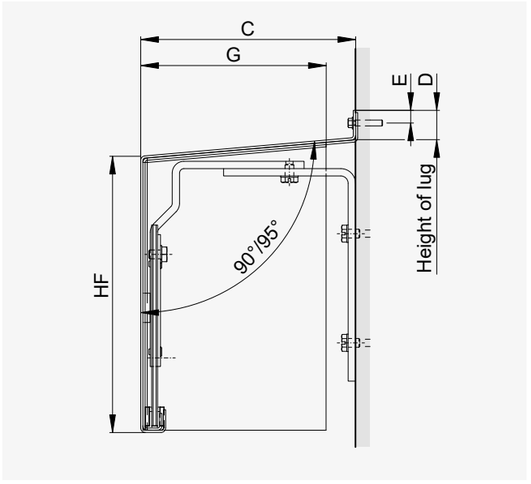

Corner connections	possible
Closing panel	loose or fixed
Clip, fastening	at rear
Option	with 90° (Depth C)
Option	ledge at bottom (D dimension)

HF Front height
P Package height
LSP Light gap
G Closing panel depth
C Front panel depth

The covers are 1.5 mm thick. The covers are cut to size and shaped before being powder-coated in-house, to avoid hairline coating cracks at the bend edges. The covers are manufactured to withstand proven EN 13659:2015 wind strengths of 130 km/h and pressures of up to 800 N/m².

The all-round feelgood package for your living and working space.

Discover the Griesser Smart Home and Smart Building controls. With their intelligent network credentials, these systems also offer open interfaces to outside products. Interconnected technology for optimum room comfort. Explore Griesser's unique trio of comfort dimensions.

Griesser's control solutions provide thermal and visual comfort and optimum privacy protection, all to ensure an ultimate feelgood living and working experience.

Visual comfort.
Griesser's Smart Home system gives you absolute control over the light coming into your home. Smart Home eliminates uncomfortable glare while simultaneously ensuring optimum light volumes – as much or as little light as you wish.

Thermal comfort.
Automatically operated solar shading maintains an optimum room ambience all year round. The system not only perfectly regulates inside temperatures: it lowers the need for heating and cooling, too. That saves energy to deliver a truly winning combination of feelgood comfort with strong sustainable credentials.

Protective comfort.
Griesser's Smart Home system does not just deliver welcome physical comfort: it provides reassuring protection of your personal privacy, too. So you can enjoy all the coziness of your own four walls free of prying eyes. Safe, secure and undisturbed: Smart Home offers it all.

Griesser Smart Home.
With its solar shading models, weather sensors, receivers and apps, Griesser has a wide range of systems to help you reliably network your solar shading facilities. And with their perfect interconnections, we'll provide you with a solar shading solution that is ideally tailored to your particular wishes and needs.

KNX house and building automation.
Griesser's KNX solar shading control option is an integrated master control system that boasts a broad range of functions to serve buildings of every size. With their tried-and-trusted features such as solar tracking and horizon limitation, KNX systems meet the highest demands of any solar shading controls.

BiLine radio control.
Griesser's BiLine control system blends contemporary design with high functional reliability through its routing technology. Radio control systems offer the key advantage of being easy to install, be it in new constructions or as retrofits to provide an existing building with automated systems control.

GET IN ON Google Play

Download on the App Store



Live more sustainably. Save energy.





Griesser. Grinotex® External Venetian Blinds.

Immerse yourself in the **Griesser color world.**

Choose from over 150 colors to harmonize your solar shading perfectly with your facade. The color of your blinds will be a combination of color shade, luminosity and texture. Components are provided as standard with a matt texture and a semi-gloss luminosity.



No more compromise with the BiColor option.
Slats coated in two distinct colors, one for inside and one for the outside look.

Create your color.
Instead of restricting you to silver, grey or black, Griesser invites you to simply choose your own favorite color. And if you can't see it in our range, you can bring us your favorite pullover or a sample of the color of your wall. We can then recreate the shade using our color spectrometer and blend it especially for you. So that your solar shading fits perfectly into your architecture's color concept.

Rich. Elegant. Optimally coated.
We want our products to be both durable and suitable for use in any situation. That's why we've developed an optimal coating for each of our products. It consists of the color shade, the luminosity level and the texture. The result: colors that are as rich and intense as you want them to be. For solar shading that reflects and absorbs just the right amount of light to suit the climate and the space. And for the final touch, we also provide additional particles that create a particularly elegant effect.

GriRAL.
Our GriRAL color collection consists of 50 different RAL color shades. From sand yellow to traffic white, we offer an extensive range of shades in every color segment. So we're convinced we have just the color shade, to meet your particular wishes and needs.

GriColors.
Our GriColors range, with its four collections of Glass & Stone, Sun & Fire, Water & Moss and Earth & Wood, offers some 100 color shades from cool whites to warm reds, natural blues and earthy browns.

BiColor

BiColor.
Slats in two colors: one for the interior and one for the outside world – that's the BiColor product. So for the outer face of your blinds, you can select a color for your slats that fits seamlessly into your facade in visual terms. And for the inner face of the blind, you can align your slats' color to the contents of the room. **Exclusively at Griesser.** Dare to be bold!

Note: With the BiColor version, a narrow strip of the outer color is visible on the inside of the blind for each slat.

Verified quality.
All the suppliers of our color lacquers and powders have earned themselves the globally recognized QUALICOAT quality seal of approval.

Grinotex® | Grinotex® Sinus dimensions.

Minimum and maximum dimensions by type of drive.

Operation	Width mín. (bk)		Width [1] max. (bk)	Height min. (hl)	Height max. (hl)	Surface [2] max. (m^2)
Crank drive	600	800 [3]	4000	380	4250	8 *
Motor drive	760	825 [4]				8

Connected systems.

Operation	Width [1] max. (bk)	Height max. (hl)	Blinds (max.)	Blinds per system	Surface [2] max. [m^2]
Crank drive [5]	10 000	4250	3	2	8 *
				3	6.5 *
Motor drive	5500		2	2	8

1 For buildings and high-rise structures, which are exposed to high winds, this maximum value should be decreased as required. Also see wind classes data sheet.
2 If crank drive is in slat area: maximum surface area and crank position available on request.
3 Gearbox in slat area.
4 Motor drive with operating position.
5 In the case of three connected blinds, the drive should be positioned between two blinds.
* With MBMA– on request.

Minimum depth of header niche.

	Grinotex®	Grinotex® Sinus
Depth of niche * (tn)	min. 130	min. 130
A*/B	min. 65	min. 65

* Plus any addition required for protruding weatherboard or doorknob.

Minimum height of header niche (hs).

Opening height (hl)	Grinotex® Width of construction (bk)							Grinotex® Sinus Width of construction (bk)						
	≤2000	2001–2250	2251–2500	2501–2750	2751–3000	3001–3250	3251–3750	≤2000	2001–2250	2251–2500	2501–2750	2751–3000	3001–3250	3251–3750
<750								230	230	230	230	230	230	235
751–1000								230	230	230	240	240	240	255
1001–1250	230	230	230	245	245	245	255	245	245	245	260	260	260	270
1251–1500	245	245	245	260	260	260	275	260	260	260	275	275	275	290
1501–1750	265	265	280	280	280	290	290	285	285	300	300	300	310	310
1751–2000	280	280	295	295	295	310	310	300	300	315	315	315	330	330
2001–2250	300	300	315	315	315	325	325	320	320	335	335	335	345	345
2251–2500	315	315	330	330	345	345	345	340	340	355	355	365	365	365
2501–2750	335	335	350	350	360	360		355	355	370	370	380	380	
2751–3000	350	365	365	365	380			380	395	395	395	405		
3001–3250	370	385	385	385				395	410	410	410			
3251–3500	390	405	405					410	425	425				
End slat	23	38		50				23	38		50			

Header dimensions are approximate values which may exhibit negative or positive deviations depending on the technical circumstances.
All dimensions are in mm. Complete table in the short manual.

Grinotex® | Grinotex® Sinus dimensions.

Technical details.

Vertical section of header niche Grinotex® Standard

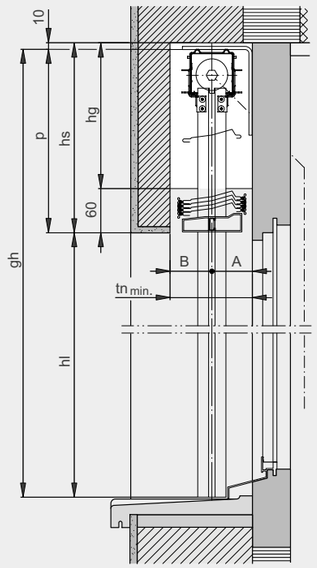

Vertical section with cover Grinotex® Sinus

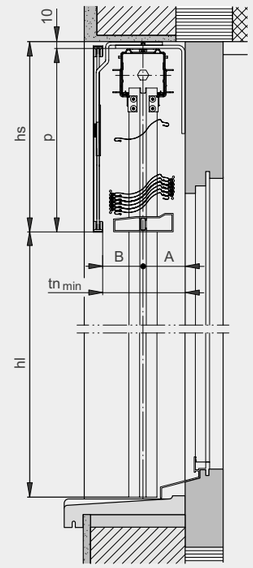

Guides recessed

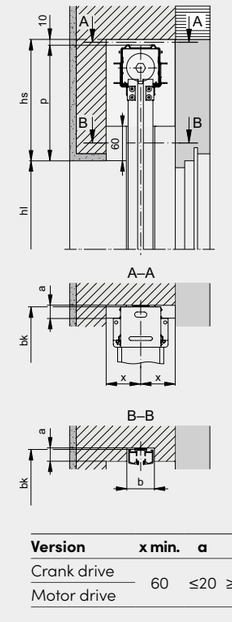

Version	x min.	a	b
Crank drive	60	≤20	≥50
Motor drive			

Detail for bottom: Grinotex® Standard

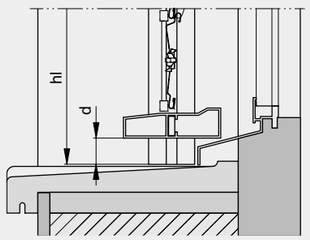

d (d-dimension)
5... 50 +5/–3
in 5 mm steps | Standard: 20

Horizontal section for crank drive

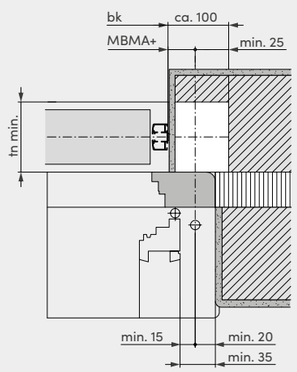

Horizontal section for guide rail

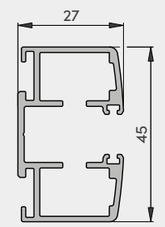

gh Overall height hl Finished clear height hs Height of header
Further technical details are available in the Short Guide at griesser.com.

Product variants.

Installation situations.

	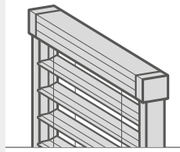 Grinotex®	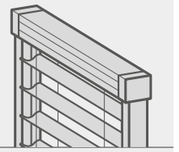 Grinotex® Sinus
Installation location		
in header niche	■	■
beneath header	(■)[1]	(■)[1]
on facade	(■)[1]	(■)[1]
Type of installation		
self-supporting 2	■	■

1 With cover.
2 Self-supporting up to a width of 2,000 mm. From a width of 2,001 mm, box supports are required. A load-bearing, professional base is required for blind installation.

Slats.

	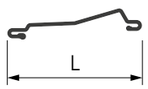 Grinotex®	 Grinotex® Sinus
Slat width (L)	93	89

End slat.

	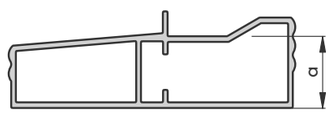 Grinotex®	Grinotex® Sinus
Height of the end slat		
	23	23
	38	38
	50	50

Product variants.

Operation.

Drive (motor or crank)	**Radio-less**	**Simple radio**	**Bi-directional radio**	**Crank**
Elero	■	–[1]	BiLine[2]	–
Somfy	■	–[3]	–[4]	–
Crank	–	–	–	■

Note: The IO receivers are not compatible with the soft-closing motor.
1 An RTS radio receiver can be ordered separately.
Attention: The RTS radio receiver only works in conjunction with an Elero Soft motor.
2 An IO radio receiver can be ordered separately.
Attention: The IO radio receiver only works in conjunction with an Elero Soft Motor.
3 An RTS radio receiver can be ordered separately.
4 An IO radio receiver can be ordered separately.

■ possible – not possible

Automation.

Smart Home		**Smart Building**	
Griesser BiLine	KNX	KNX	gBUS

Compatible with further controls: on request.

Wind categories.

Grinotex® | Grinotex® Sinus.

Product	Permissible wind resistance category thresholds[1]							
Width	1500	2000	2500	3000	3500	4000	4500	5000
Grinotex® | Grinotex® Sinus	6	6	5	4	3	3	2	2

[1] Tests based on EN 13659 product norm. Product limit dimensions as per data sheet.

Setting values for sensors according to manufacturer.

Category 0	Category 1	Category 2	Category 3	Category 4	Category 5	Category 6	Category [7]	Category [8]
< 9.0 m/s	9.0 m/s	10.7 m/s	12.8 m/s	16.7 m/s	21.0 m/s	25.6 m/s	29.2 m/s	33.3 m/s
< 32.5 km/h	32.5 km/h	38.5 km/h	46 km/h	60 km/h	76 km/h	92 km/h	105 km/h	120 km/h

Setting for wind sensors if installed on the product.
[ ] No wind resistance category based on product norm.

Corrosion classes.

Grinotex® | Grinotex® Sinus.

Product	Corrosion class
Grinotex®	4 [1]
Grinotex® Sinus	4 [1]

[1] Without the Protect[PLUS] option, the product has corrosion class 3.

Tests and evaluations:
Salt spray tests conducted in accordance with ISO 9227.
Visual inspections performed in accordance with EN 1670.

Corrosion classes as per EN 13659:2015.

Corrosion class		Applications	Length of testing
1	Little resistance	Indoors in dry environments	24 h
2	Moderate resistance	Indoors in environments where condensation may occur	48 h
3	High resistance	Outdoors where damp, rain or dew may occasionally or frequently occur	96 h
4	Very high resistance	Outdoors in very tough conditions	240 h

Fire protection categories.

Grinotex® | Grinotex® Sinus.

Product group	Venetian blinds
Blind/shutter material	Aluminum
Example	Grinotex®
Swiss VKF flammability group	RF1
Swiss VKF fire index number	6q.3
EU fire performance class under EN13501-1	A2-s1.d0
Description	(virtually) nonflammable

Product identification.

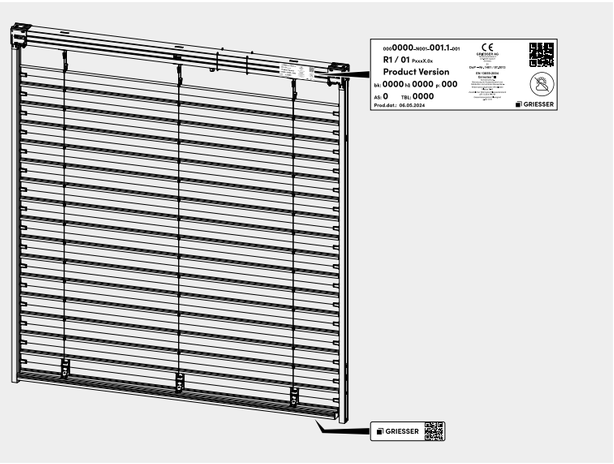

Griesser products are labelled with an individual QR code. Scanning this QR code provides a wealth of information and services.

For further technical details, please refer to our documentation at: griesser.com.

Inspired by the **Sun.**

griesser.com

Subject to change without prior notice 20260617 Item no. 183014