Tech Guide
External venetian blinds



GRIESSER

External venetian blinds
Table of contents

Metalunic® V | Metalunic® V Sinus	**3**
Grinotex® III | Grinotex® III Sinus	**30**
Lamisol® III	**71**
Lamisol® III System	**116**
Lamisol® III Vento	**146**
Aluflex®	**172**
Solomatic® II	**232**
Solomatic® II System	**296**
Annex	**326**
Index	**331**

The information and values given refer to our products in their standard version according to the brochure and intended use / application.

20261109

Metalunic® V | Metalunic® V Sinus

Specifications

Limit dimensions **4**

Mounting situations

Built-in system **5**

Built-in system with cover **5**

Header dimensions | Heights of package **6**

Slat profiles **7**

Darkening **8**

Guide rail **9**

Sections | Details **10**

Sections for crank drive (MBMA) **11**

Fastenings

Guide rail installation (principle) **12**

Guide rail fastenings (principle) **14**

Guide extension and facet **20**

Guide rail cut-outs in windowsill area **21**

Fastening points **23**

Drive

Connected systems **27**

Technical data of motors **29**

Limit dimensions

Single blind

Operation	Width min. (bk)	Width[1] max. (bk)	Height min. (hl)	Height max. (hl)	Surface[2] max. [m²]
Crank drive	500	2800	440	4000	6.5
Motor drive	700				8

Connected systems

Operation	Width[1] max. (bk)	Height max. (hl)	Blinds max.	Blinds per system	Surface[2] max. [m²]
Crank drive	8400	4000	3	2	5
				3	4
Motor drive			2	2	4.8

[1] For buildings and high-rise structures, which are exposed to high winds, this maximum value should be decreased as required. Also see wind classes data sheet.

[2] If crank drive is in slat area: maximum surface area and crank position available on request.

Inclined installation

~~Metalunic® V Sinus~~

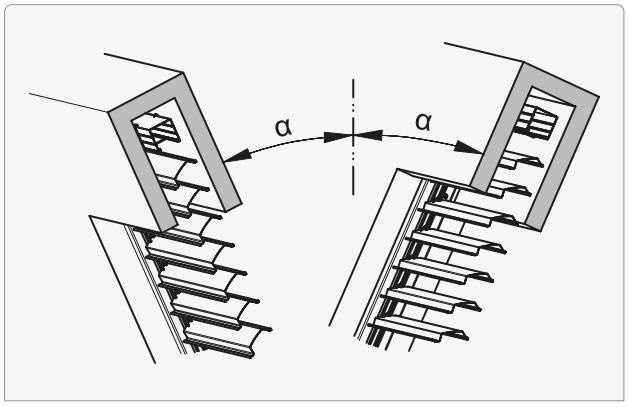

Angle from the vertical [α]	Width max. (bk)
max. 25°	1800

Reduce maximum loading with inclined installation by 20 %.

Protect blinds angled towards the outside from the effects of weathering (snow, ice).

Definitions of dimensions 327

Built-in system

Vertical section: Metalunic® V

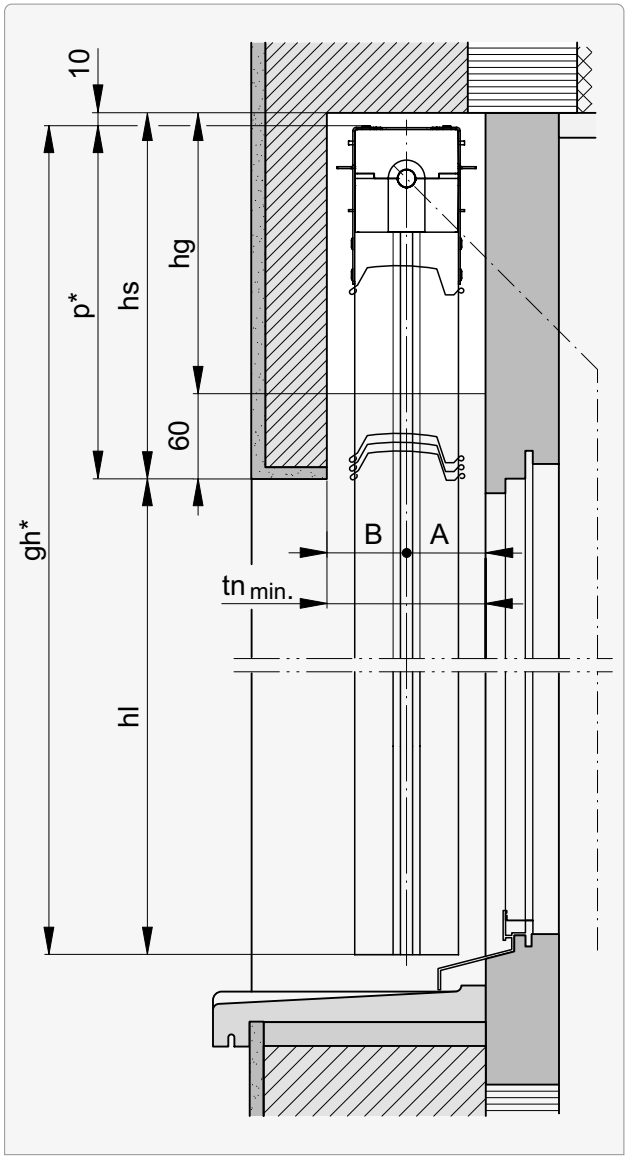

Built-in system with cover

Vertical section: Metalunic® V Sinus

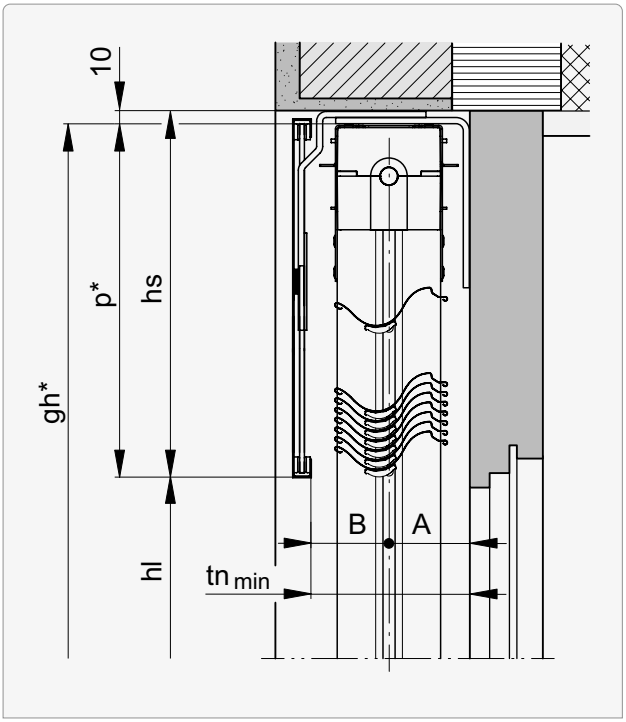

*Due to the split arrangement of the chain, **gh** and /or **p** can be reduced by up to 15 mm compared to the ordering dimensions.

Horizontal section

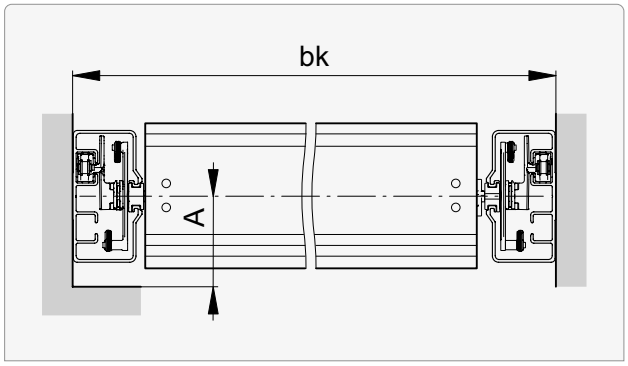

Sections | Details 10
Values for **A**, **B** and **tn** 6

Header dimensions | Heights of package

Metalunic® V

hl →I	P min.	hs[1]	hl →I	P min.	hs[1]
1000	260	270	**2550**	410	420
1050	260	270	**2600**	420	430
1100	260	270	**2650**	425	435
1150	265	275	**2700**	425	435
1200	270	280	**2750**	435	445
1250	275	285	**2800**	440	450
1300	285	295	**2850**	440	450
1350	285	295	**2900**	450	460
1400	290	300	**2950**	460	470
1450	295	305	**3000**	460	470
1500	300	310	**3050**	465	475
1550	305	315	**3100**	470	480
1600	315	325	**3150**	475	485
1650	315	325	**3200**	480	490
1700	320	330	**3250**	490	500
1750	330	340	**3300**	490	500
1800	330	340	**3350**	500	510
1850	340	350	**3400**	505	515
1900	345	355	**3450**	505	515
1950	345	355	**3500**	515	525
2000	355	365	**3550**	520	530
2050	360	370	**3600**	520	530
2100	360	370	**3650**	530	540
2150	370	380	**3700**	530	540
2200	380	390	**3750**	540	550
2250	380	390	**3800**	545	555
2300	385	395	**3850**	545	555
2350	395	405	**3900**	555	565
2400	395	405	**3950**	560	570
2450	400	410	**4000**	565	575
2500	405	415			

tn[2] min.	A	B
120*	60	60

Metalunic® V Sinus

hl →I	P min.	hs[1]	hl →I	P min.	hs[1]
1000	260	270	**2550**	415	425
1050	260	270	**2600**	415	425
1100	260	270	**2650**	425	435
1150	260	270	**2700**	425	435
1200	270	280	**2750**	435	445
1250	270	280	**2800**	440	450
1300	270	280	**2850**	440	450
1350	280	290	**2900**	450	460
1400	290	300	**2950**	455	465
1450	295	305	**3000**	460	470
1500	305	315	**3050**	470	480
1550	310	320	**3100**	470	480
1600	310	320	**3150**	475	485
1650	315	325	**3200**	485	495
1700	325	335	**3250**	485	495
1750	325	335	**3300**	495	505
1800	335	345	**3350**	495	505
1850	345	355	**3400**	500	510
1900	345	355	**3450**	510	520
1950	350	360	**3500**	510	520
2000	360	370	**3550**	520	530
2050	360	370	**3600**	530	540
2100	370	380	**3650**	530	540
2150	375	385	**3700**	535	545
2200	375	385	**3750**	545	555
2250	385	395	**3800**	545	555
2300	385	395	**3850**	550	560
2350	390	400	**3900**	555	565
2400	400	410	**3950**	560	570
2450	400	410	**4000**	565	575
2500	410	420			

tn[2] min.	A	B
120*	60	60

[1] With gearbox in slat area: **hs + 20**.

[2] **Depending on the angle** of the gearbox output, **tn min.** should be **increased by 5 ... 10 mm** in this area.

* + possible addition for protruding weatherboard or doorknobs.

Header dimensions are approximate values which may exhibit **negative or positive deviations** depending on the technical circumstances. **A dimensional tolerance of ±5 mm** is observed for the header height.

Slat profiles

Metalunic® V

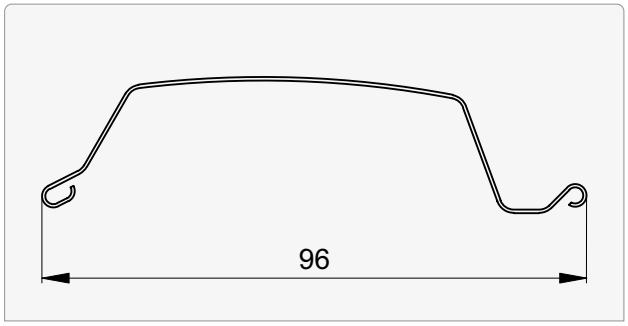

Metalunic® V Sinus

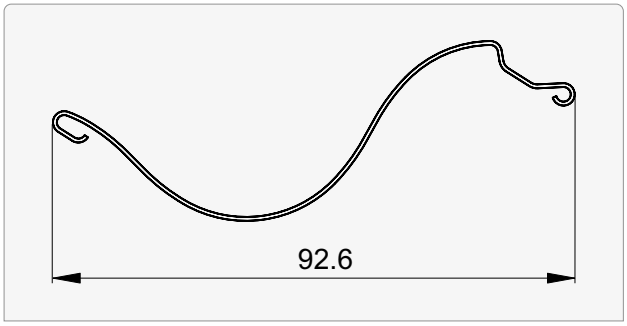

Darkening

The following measures make it possible to achieve ideal shading results:

Vertical

Locate the guides outside of the clear dimension of the window glass, if possible

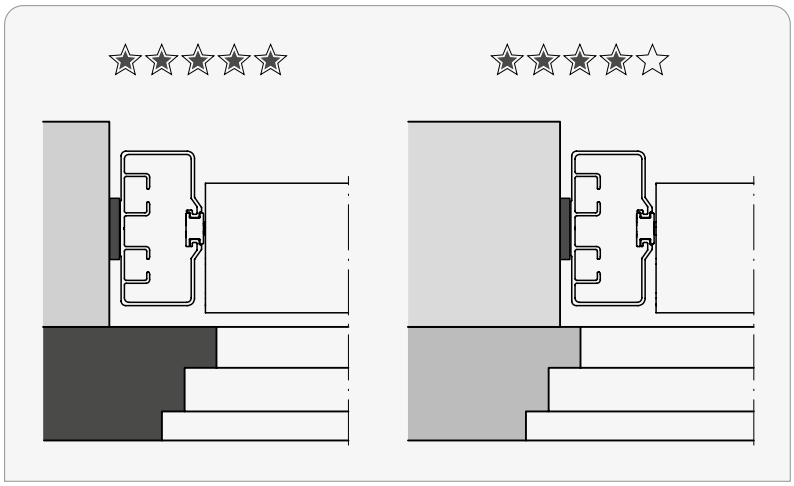

Continuous fixing bracket

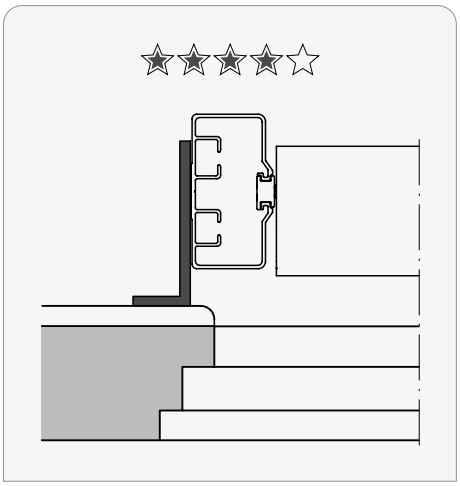

Horizontal

~~Metalunic® V Sinus~~

Darkening profile

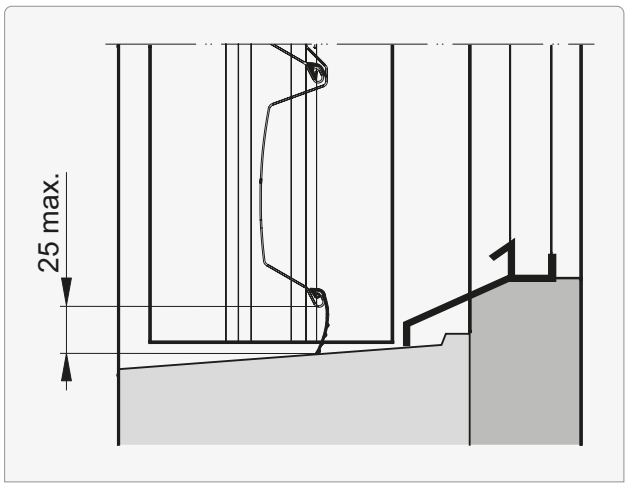

Guide rail

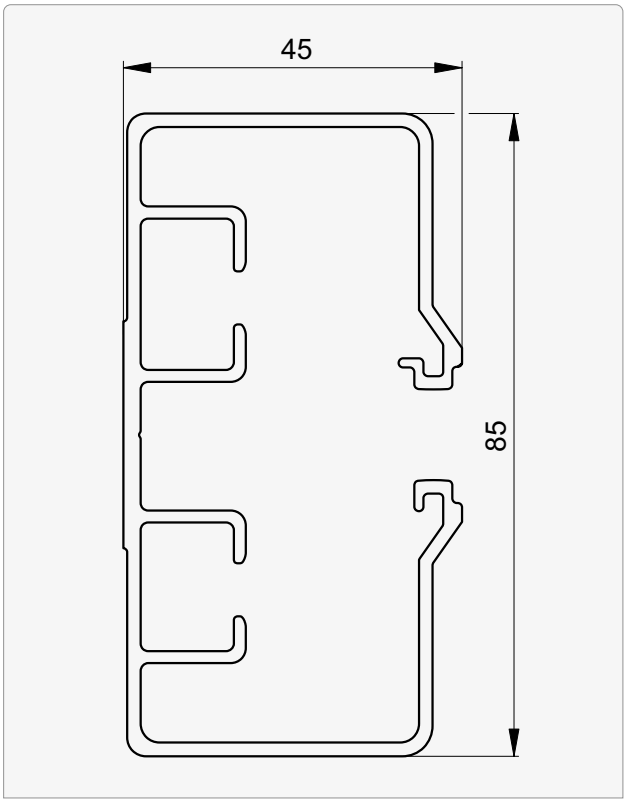

Distance between guides **FD** **27**
Fastening points **23**
Guide extension and facet **20**
Guide rail fastenings **14**
Guide rail cut-outs in windowsill area **21**
Integrated guides **13**

Sections | Details

Detail for bottom: Metalunic® V

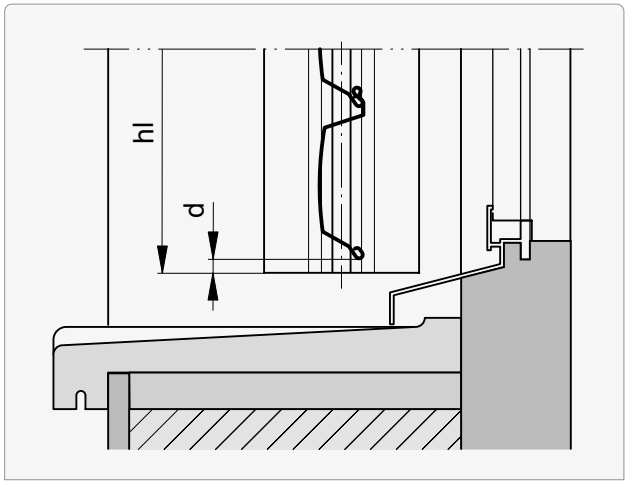

d (d - dimension)
6 ±5

d - dimension may vary with different blind dimensions.

Detail for bottom: Metalunic® V Sinus

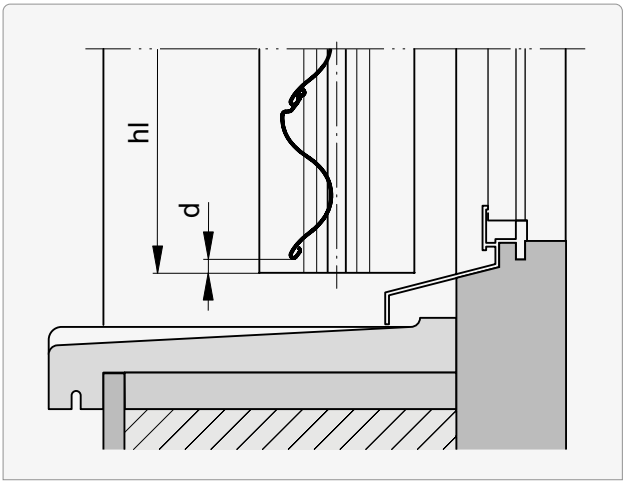

Sections for crank drive (MBMA)

outside bk

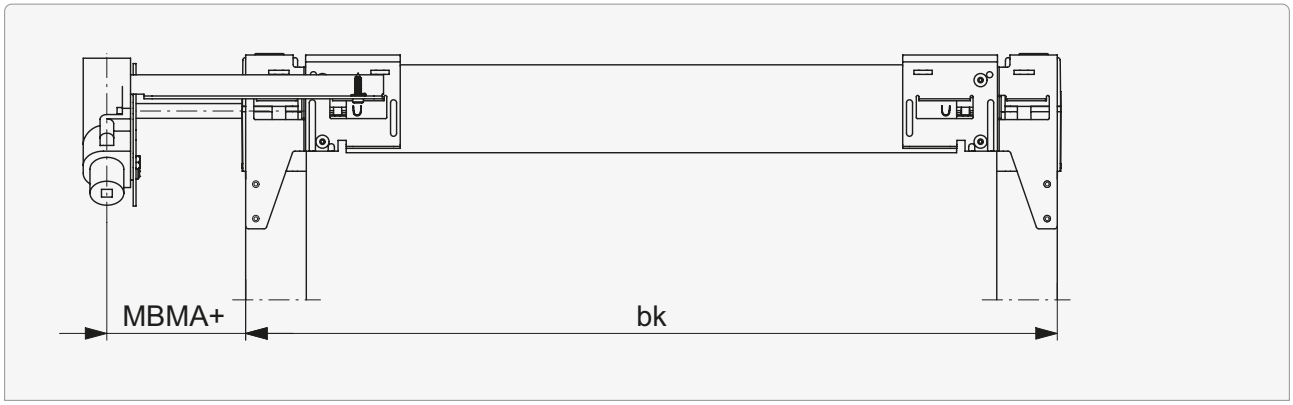

within bk

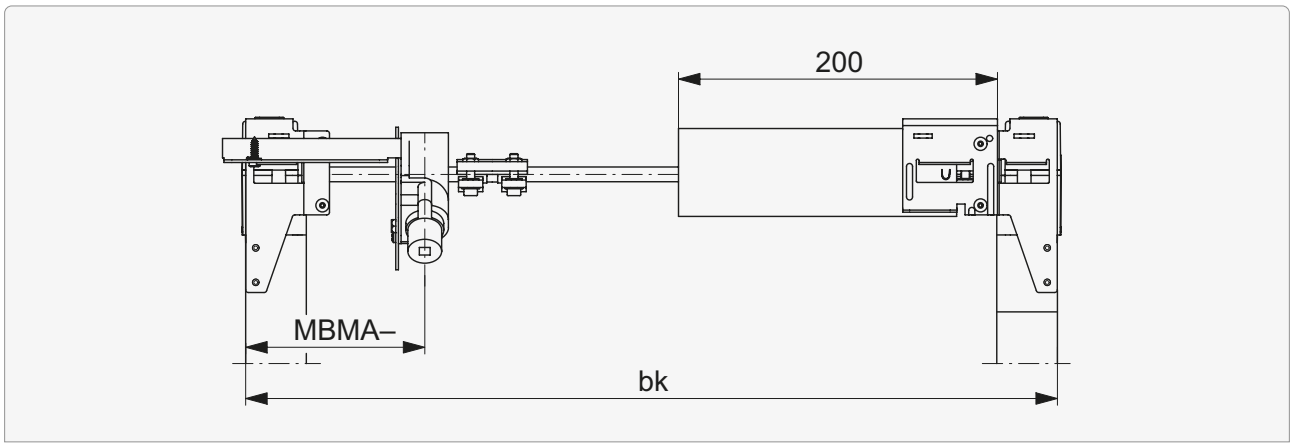

Gearbox inside housing

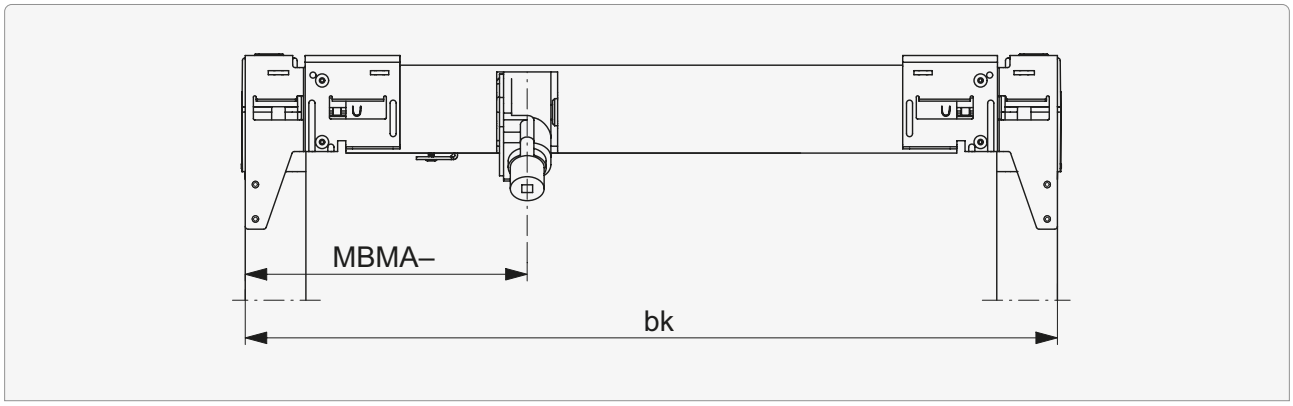

MBMA+
25 ... 160

MBMA–
90 ... 210
211 ... (bk / 2)*

* Gearbox inside housing

Guide rail installation (principle)

Guides attached (to soffit) | Type A

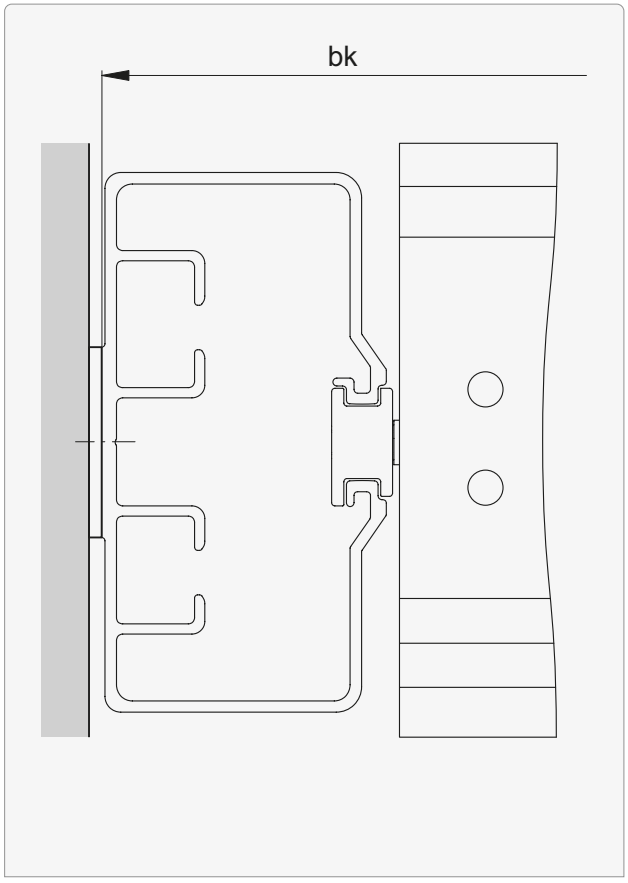

Guides suspended

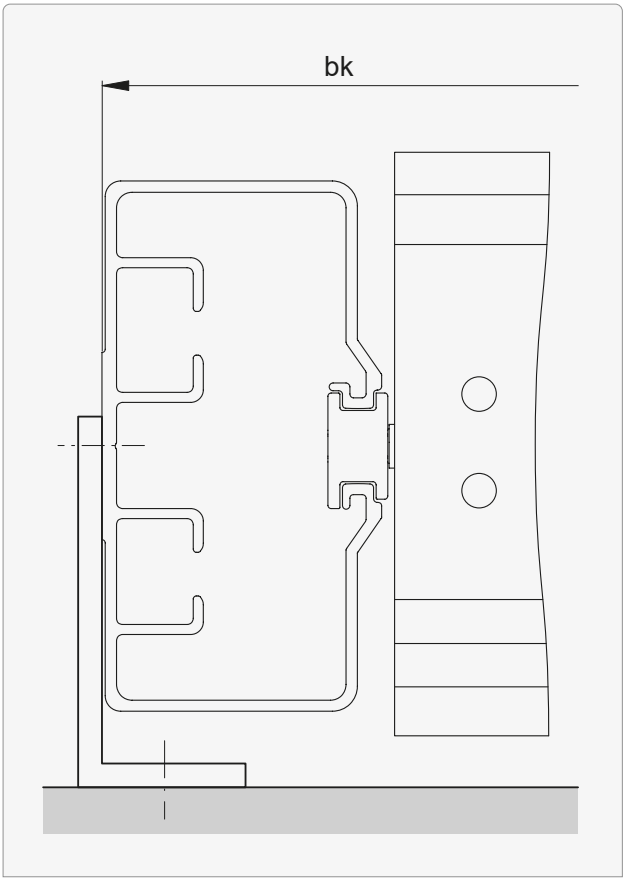

Observe possible guide rail spacer for **bk**.
Standard: 2 mm

Guide rail installation (principle)

Guides recessed

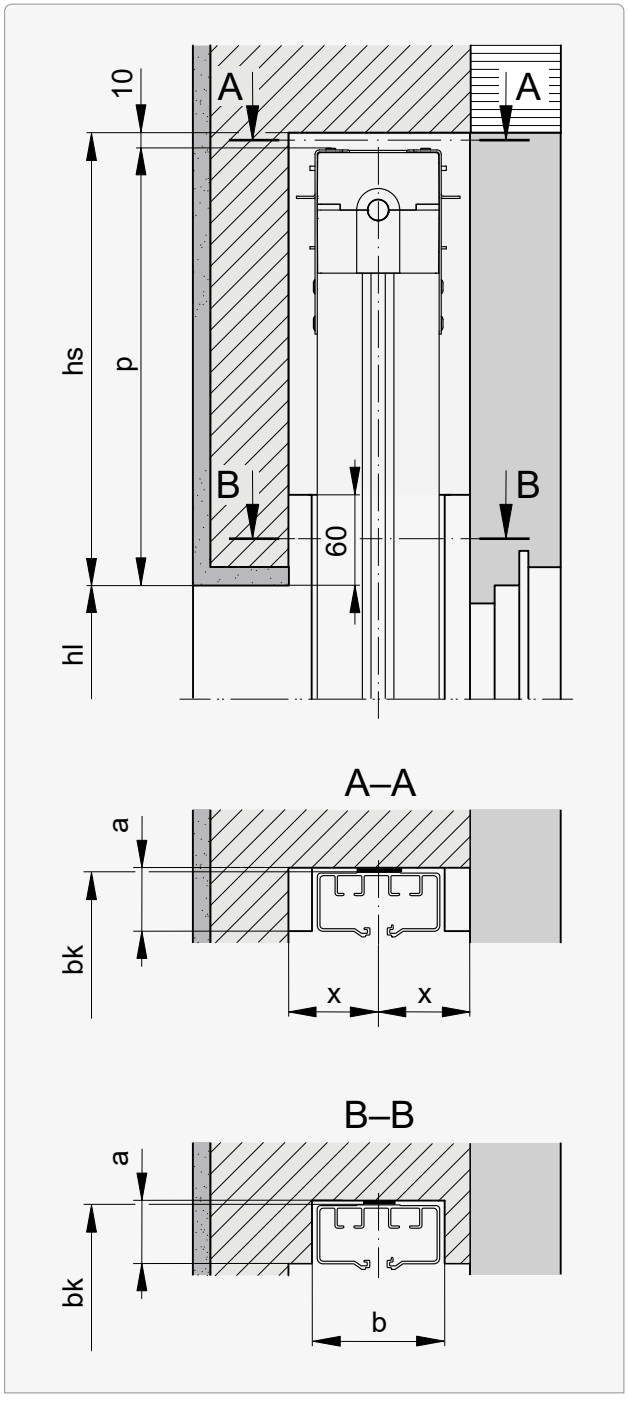

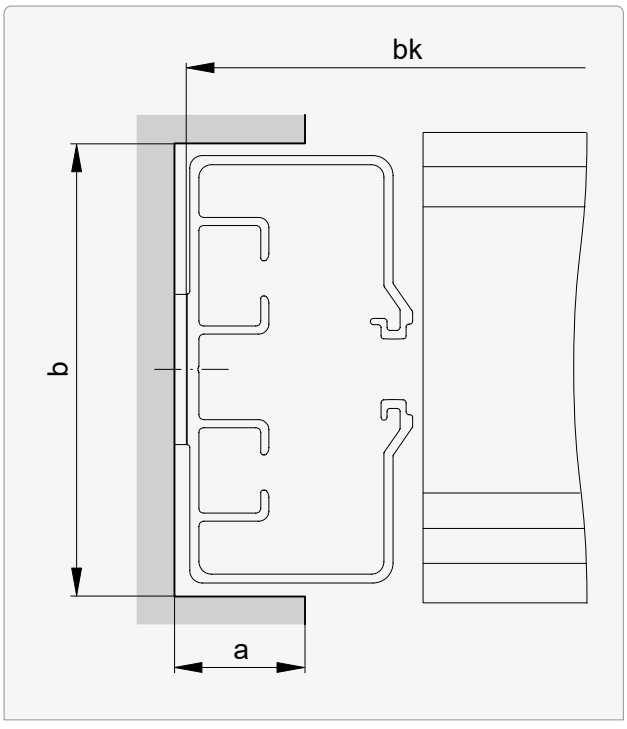

Version	x min.
Crank drive	60
Motor drive	50

a	b
≤40	≥90

Guide rail fastenings (principle)

Overview

Type														
A	B	Bd	C	Cd	E	F	G	H	Kv	M	T	Tv	V	Wv
●	●	●	●	●	●	●	–	–	–	–	●	–	●	–

● applicable without restrictions

A Soffit installation

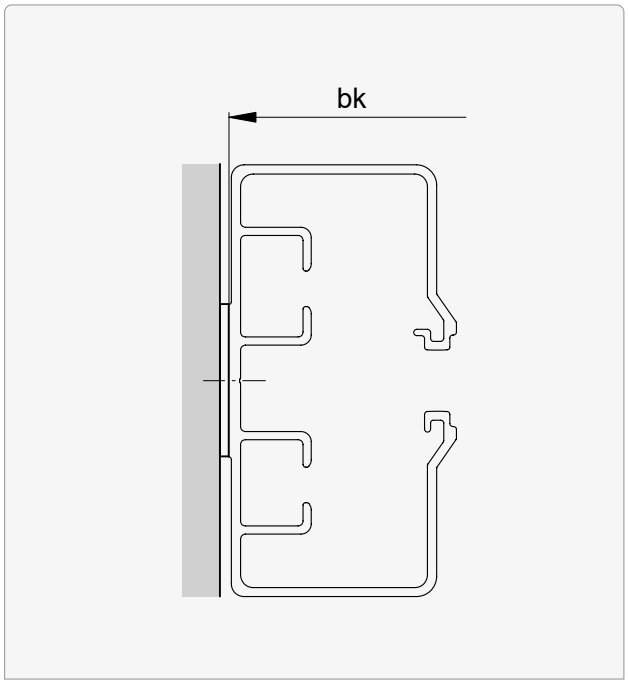

Transverse and holding force per fastening point at least 1000 N.

Observe possible guide rail spacer for **bk**.
Standard: 2 mm

Guide rail fastenings (principle)

B Installation with fastening bracket

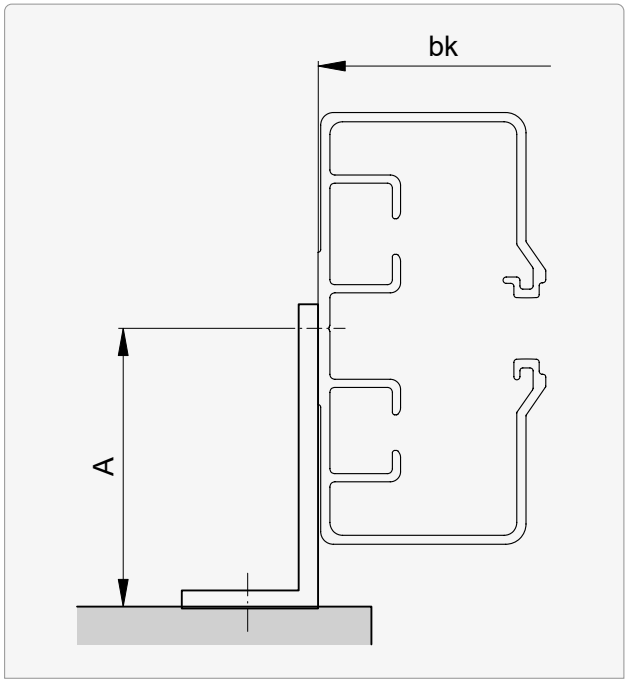

Bracket outwards

C Installation with fastening bracket

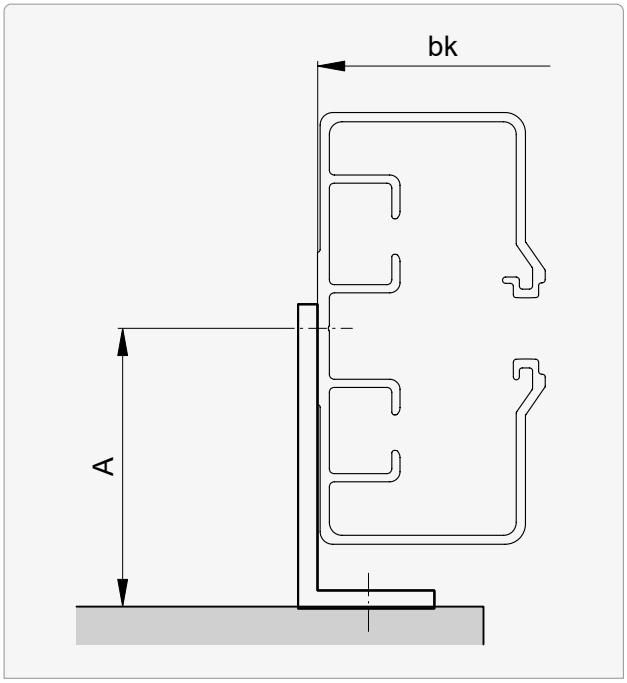

Bracket inwards

Fastening bracket for types B and C

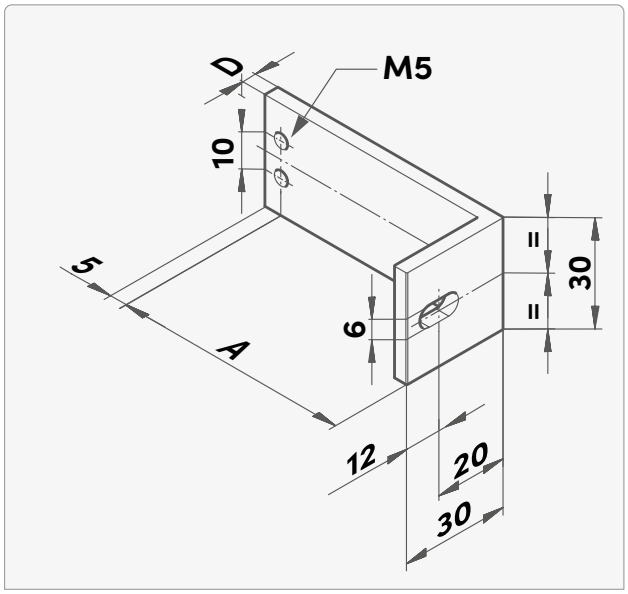

A*	D
20 ... 115	4

For suspended guide rails always with **brackets 70 mm**.

Transverse force at least 1000 N and holding force:

A*	bk < 1.5 m	bk < 2.5 m	bk < 2.9 m
0 ... 45	1000 N	1000 N	1000 N
46 ... 90	1000 N	1452 N	1814 N
91 ... 205	1500 N	3300 N	4100 N
206 ... 300	2250 N	4850 N	6000 N

* in 5 mm steps

20261109

Guide rail fastenings (principle)

Fastening bracket 70 mm for types B and C

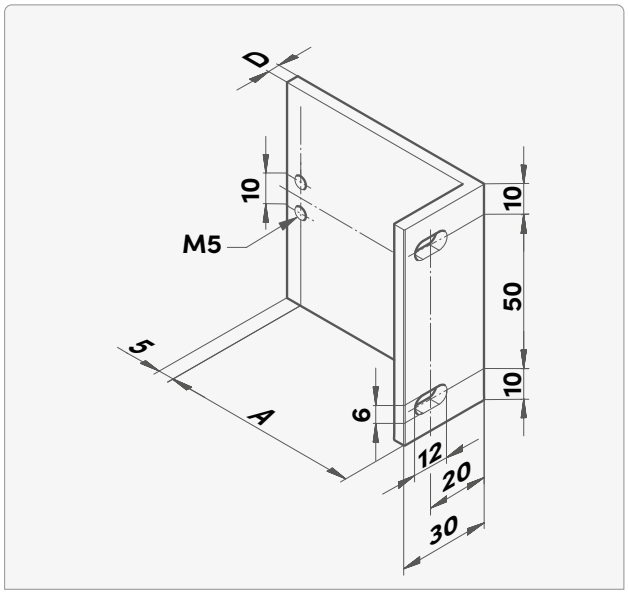

A*	D
20 ... 115	4
120 ... 215	5

Transverse force at least 1000 N and holding force at least 3500 N per fastening point.

If the **projection is ≥120**, all products are fastened with a **70 mm bracket**.

* in 5 mm steps

Guide rail fastenings (principle)

Bd Installation with continuous fastening bracket

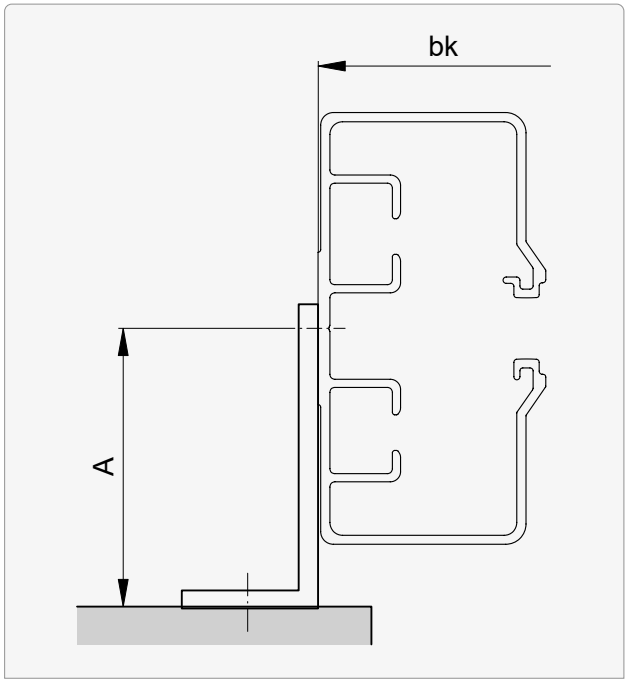

Bracket outwards

Cd Installation with continuous fastening bracket

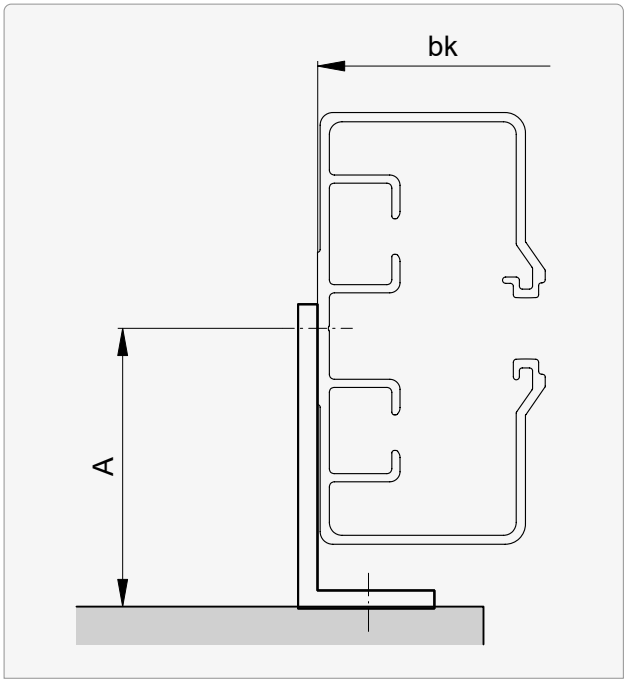

Bracket inwards

Continuous fastening bracket for types Bd and Cd

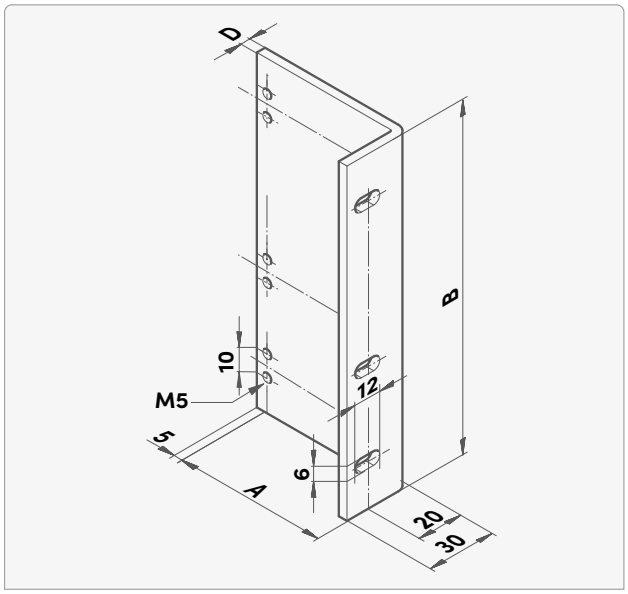

A*	D
20 ... 300	always 4

Transverse force at least 1000 N and holding force:

A*	bk < 1.5 m	bk < 2.5 m	bk < 2.9 m
0 ... 45	1250 N	2700 N	3300 N
46 ... 90	2475 N	5300 N	6650 N
91 ... 205	5600 N	12100 N	15200 N
206 ... 300	8250 N	17750 N	22200 N

* in 5 mm steps

20261109

Guide rail fastenings (principle)

E | F Installation with fastening lug

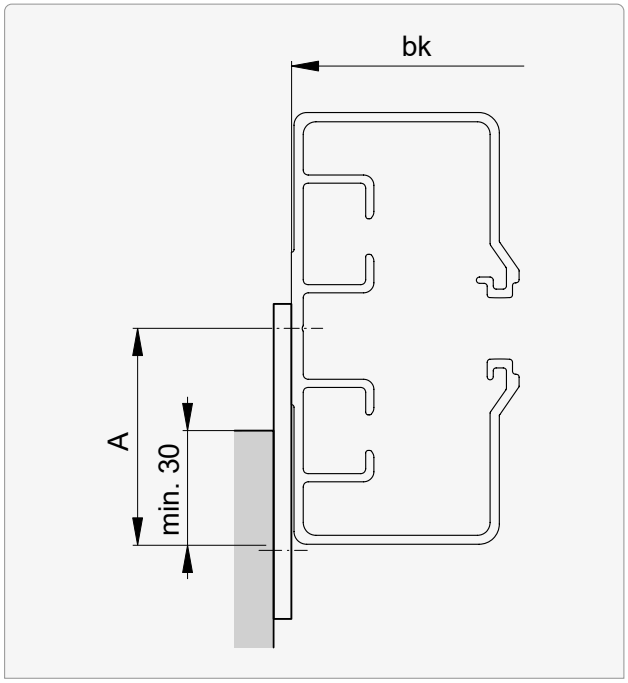

inwards / outwards

T Installation with T-bracket

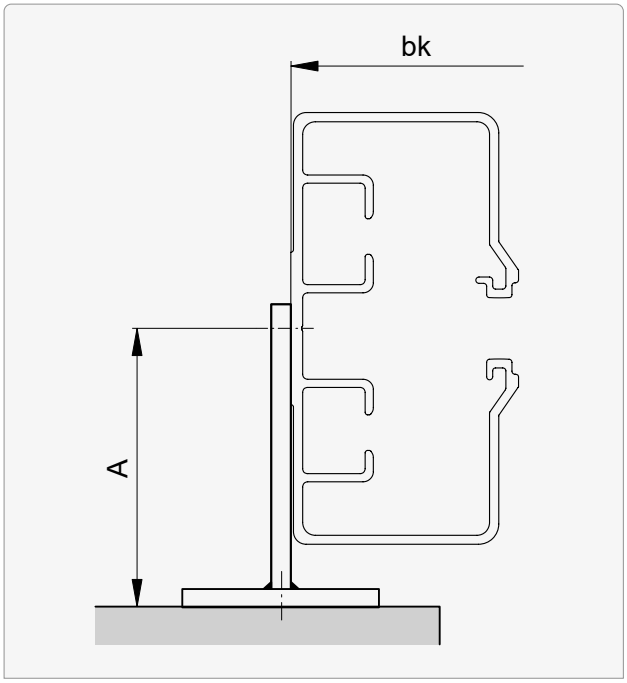

Fastening lug for type E | F

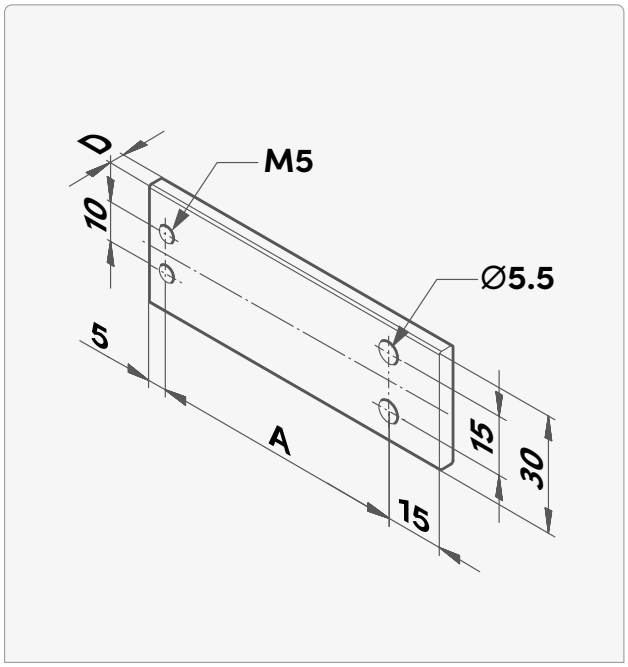

A*	D
50 ... 115	4
120 ... 125	5

Transverse force at least 1000 N and holding force at least 4200 N per fastening point.

T-bracket for type T

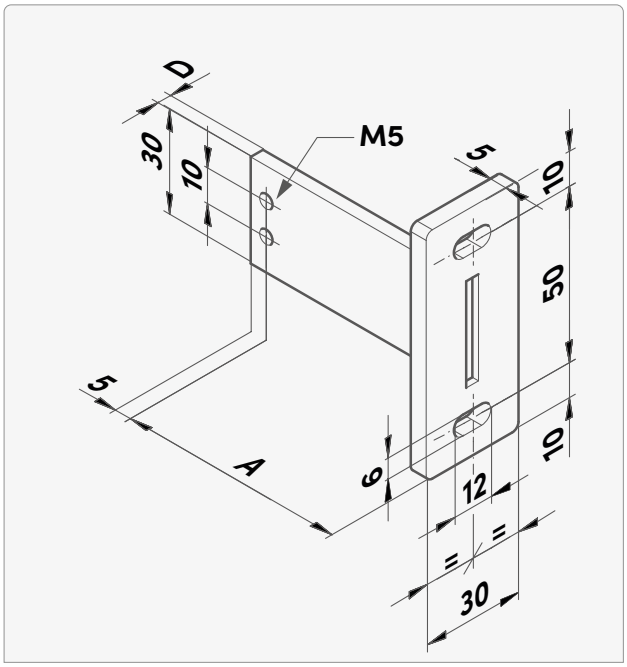

A*	D
20 ... 115	4
120 ... 215	5

Transverse force at least 1000 N and holding force at least 3300 N per fastening point.

* in 5 mm steps

Guide rail fastenings (principle)

V Installation with one bracket

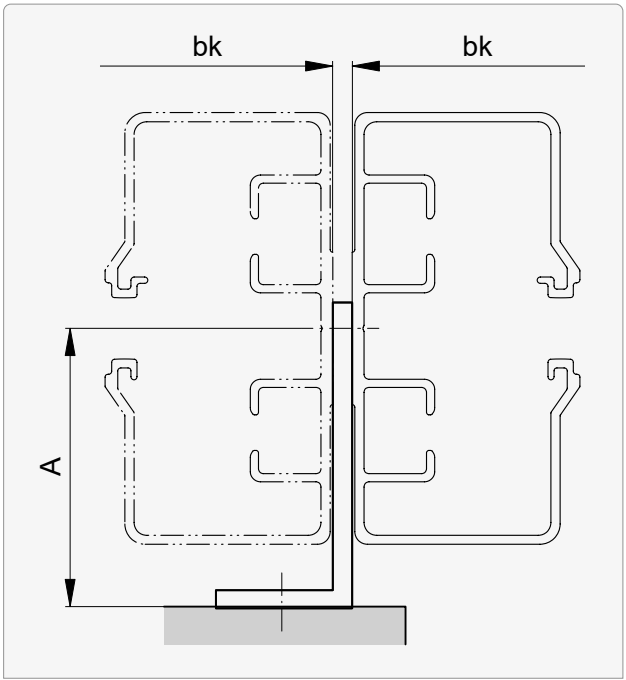

The blind on the right uses the fastening for the blind on the left.

Transverse and holding force per fastening point at least 1000 N.

Guide extension and facet

Extension

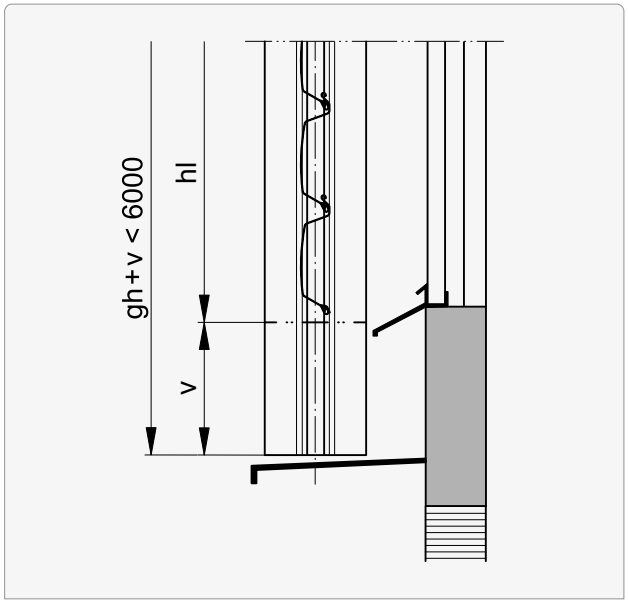

v
0 ... 3000

Facet

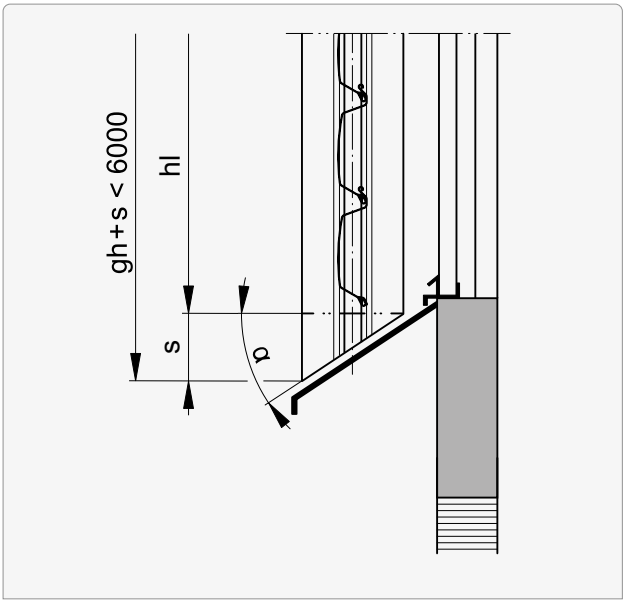

α
5 ... 60°

Extension and facet

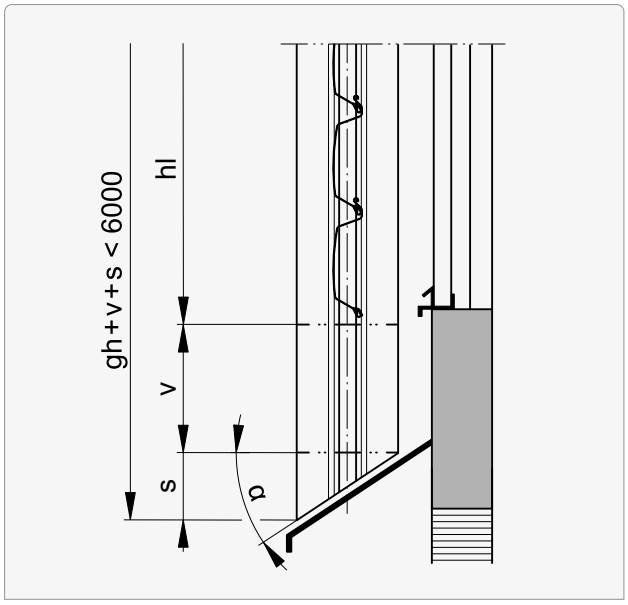

v	α
0 ... 3000	5 ... 60°

Angling at the guides

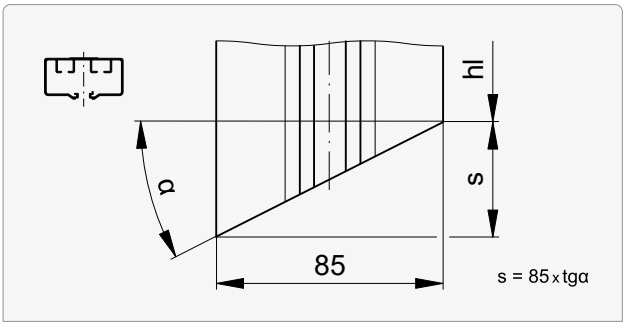

α	s	α	s	α	s	α	s	α	s	α	s
5	7	**15**	23	**25**	40	**35**	60	**45**	85	**55**	121
6	9	**16**	24	**26**	41	**36**	62	**46**	88	**56**	126
7	10	**17**	26	**27**	43	**37**	64	**47**	91	**57**	131
8	12	**18**	28	**28**	45	**38**	66	**48**	94	**58**	136
9	13	**19**	29	**29**	47	**39**	69	**49**	98	**59**	141
10	15	**20**	31	**30**	49	**40**	71	**50**	101	**60**	147
11	17	**21**	33	**31**	51	**41**	74	**51**	105		
12	18	**22**	34	**32**	52	**42**	77	**52**	109		
13	20	**23**	36	**33**	55	**43**	79	**53**	113		
14	21	**24**	38	**34**	57	**44**	82	**54**	117		

Guide rail cut-outs in windowsill area

Rear cut-out in combination with inner cut-out not possible!

Rear cut-out | with extension / with extension and facet

Extension

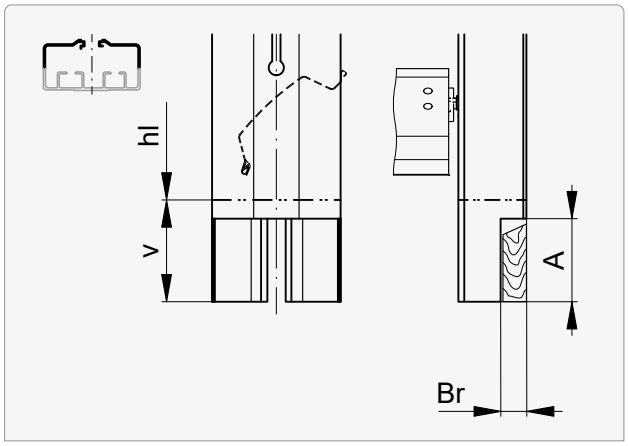

A ≤ v	Br
0 … 130	0 … 13
	17 … 25

Extension and facet

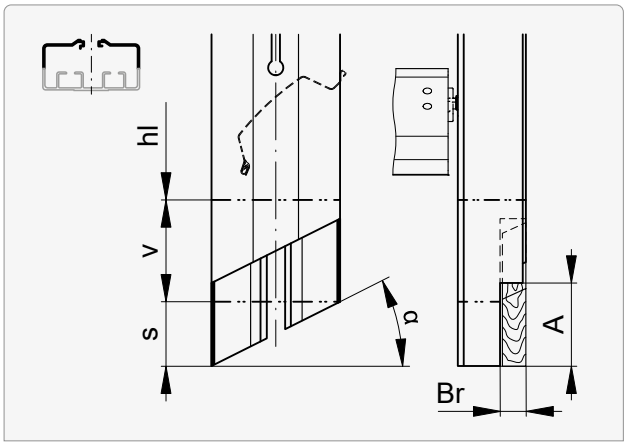

A ≤ (v + s)	Br	α
0 … 35	0 … 13	0° … 30°
	17 … 25	

Inner cut-out | without / with extension

Without extension

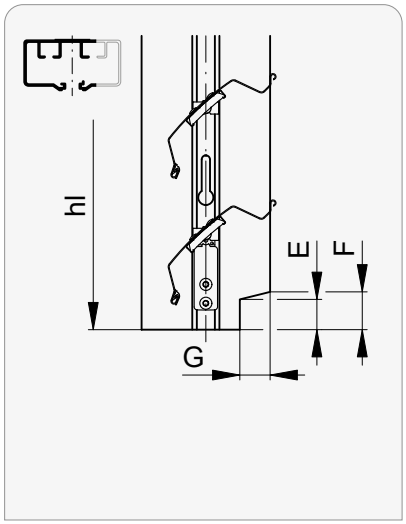

E	F	G
0 … 20	0 … 25	0 … 20

Extension | v ≤ F

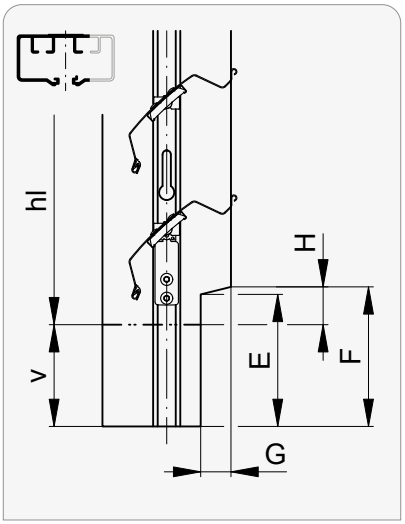

E	F	G	H
0 … 130	0 … 180	0 … 20	0 … 25

Extension | v > F

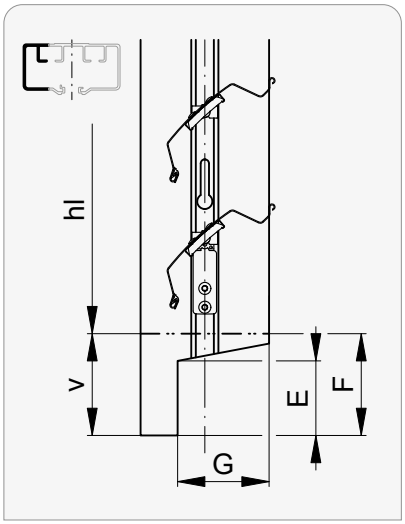

E	F	G
		0 … 20
0 … 130	0 … 180	37 … 48
		54 … 78

v Guide rail extension: 0 … 3000

Guide rail cut-outs in windowsill area

Inner cut-out | with facet

Facet | s ≤ F

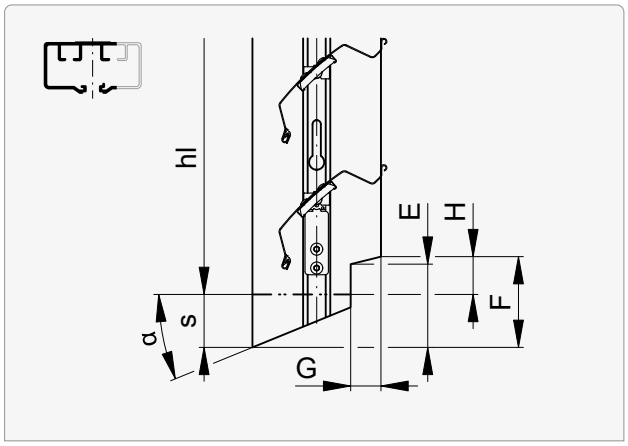

E	F	G	H
0 … 130	0 … 180	0 … 20	0 … 25

Facet | s > F

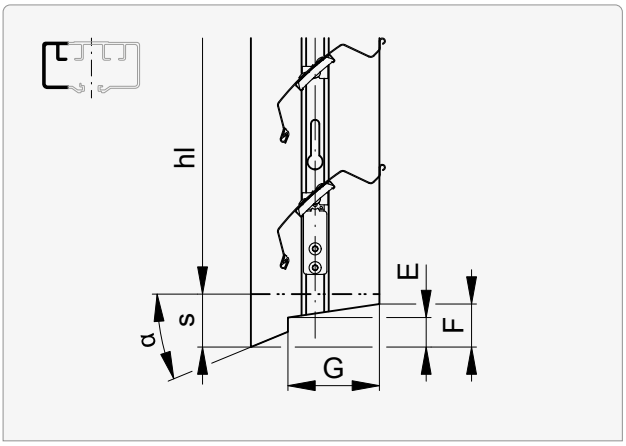

E	F	G
		0 … 20
0 … 130	0 … 180	37 … 48
		54 … 78

Inner cut-out | with extension and facet

Extension and facet | (v + s) ≤ F

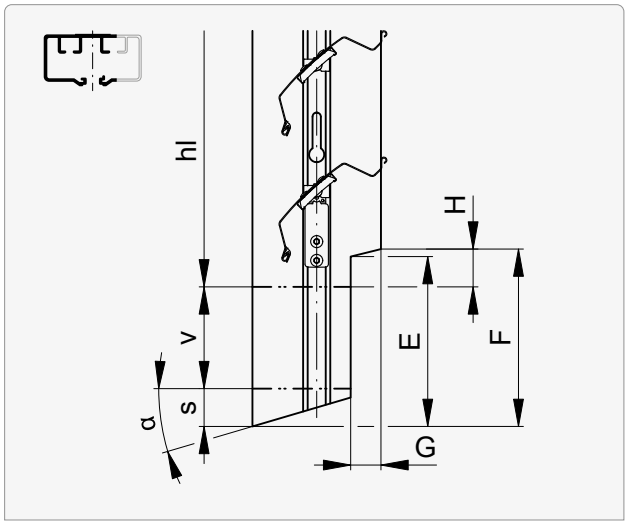

E	F	G	H
0 … 130	0 … 180	0 … 20	0 … 25

Extension and facet | (v + s) > F

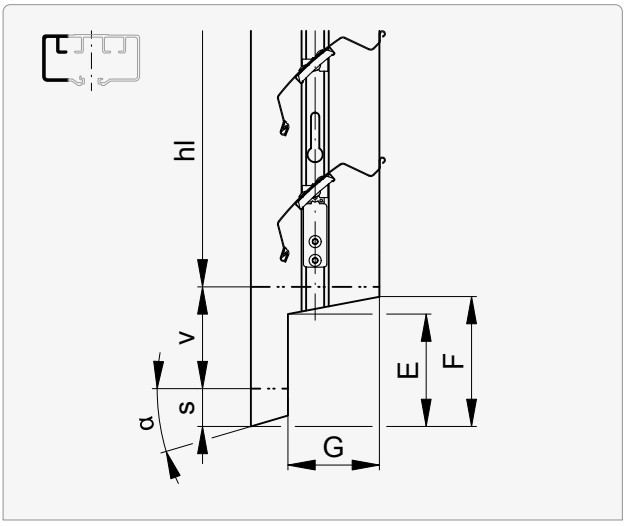

E	F	G
		0 … 20
0 … 130	0 … 180	37 … 48
		54 … 78

v Guide rail extension: 0 … 3000

Fastening points

Transverse and holding force per fastening point at least 1000 N.

Without guide rail extension

hl	**AS** min.
≤ 1500	2
1501 ... 2700	3
2701 ... 3900	4
3901 ... 5100	5
> 5100	6

Regular

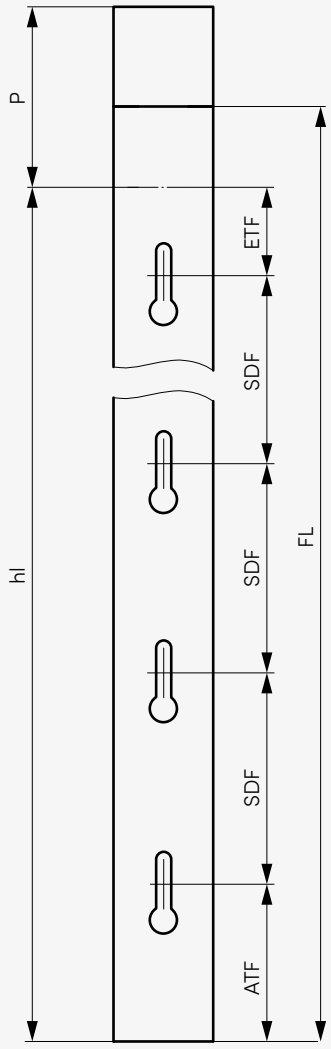

Irregular

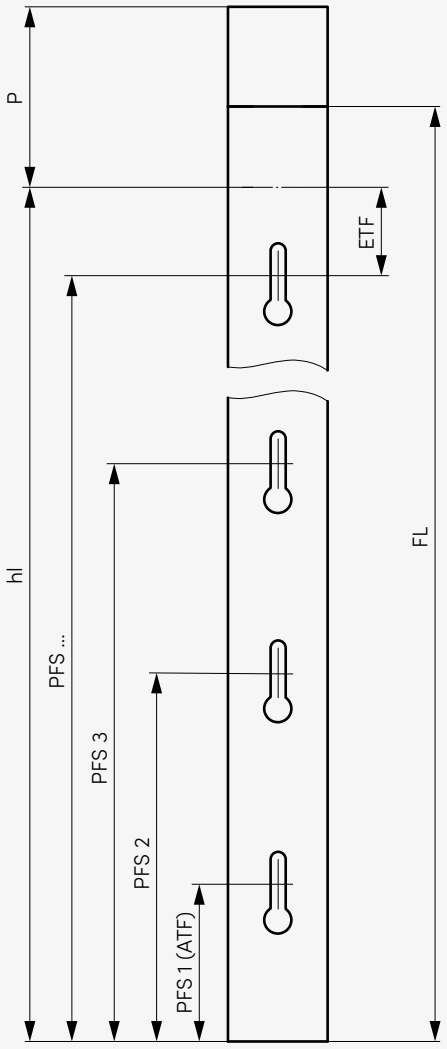

AS Number of slits
ATF Initial spacing guide rail (standard 200)
ETF Endspacing guide rail (standard 100)
FL Guide length
PFS Slot position
SDF Slot distance guide rail: 100 ... 1200

Guide rail fastenings **14**

Fastening points

Transverse and holding force per fastening point at least 1000 N.

With guide rail extension

Z	AS min.
≤ 1500	2
1501 ... 2700	3
2701 ... 3900	4
3901 ... 5100	5
> 5100	6

Regular

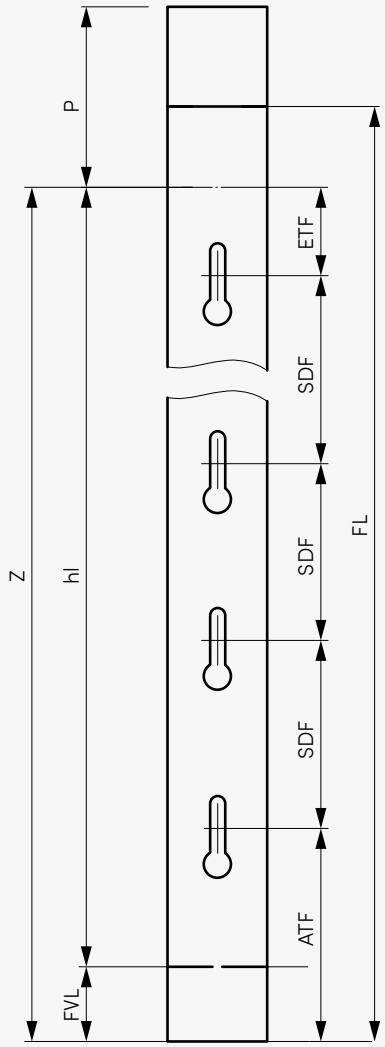

Irregular

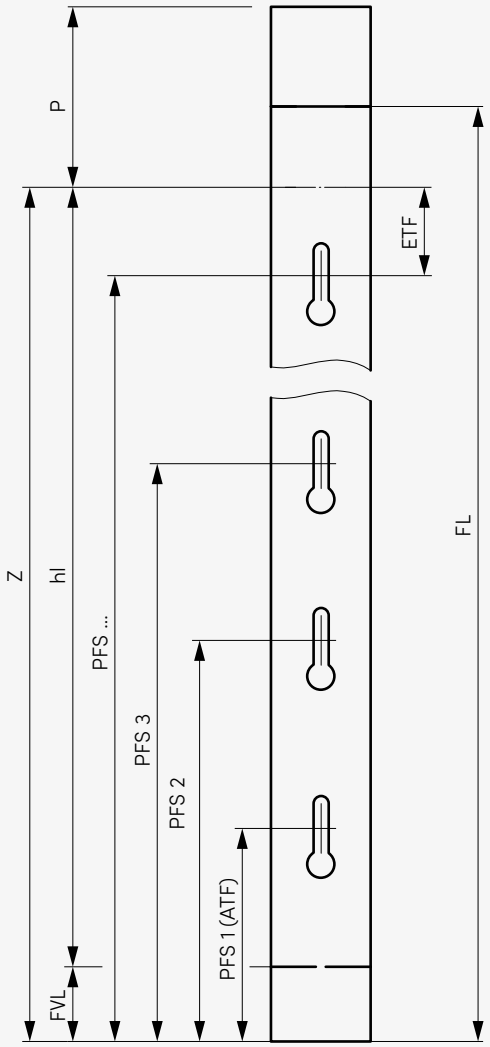

AS Number of slits
ATF Initial spacing guide rail (standard 200)
ETF Endspacing guide rail (standard 100)
FL Guide length

FVL Guide rail extension
PFS Slot position
SDF Slot distance guide rail: 100 ... 1200

Guide extension and facet 20
Guide rail fastenings 14

Fastening points

Transverse and holding force per fastening point at least 1000 N.

Without guide rail extension, with facet

Z	**AS** min.
≤ 1500	2
1501 ... 2700	3
2701 ... 3900	4
3901 ... 5100	5
> 5100	6

Regular

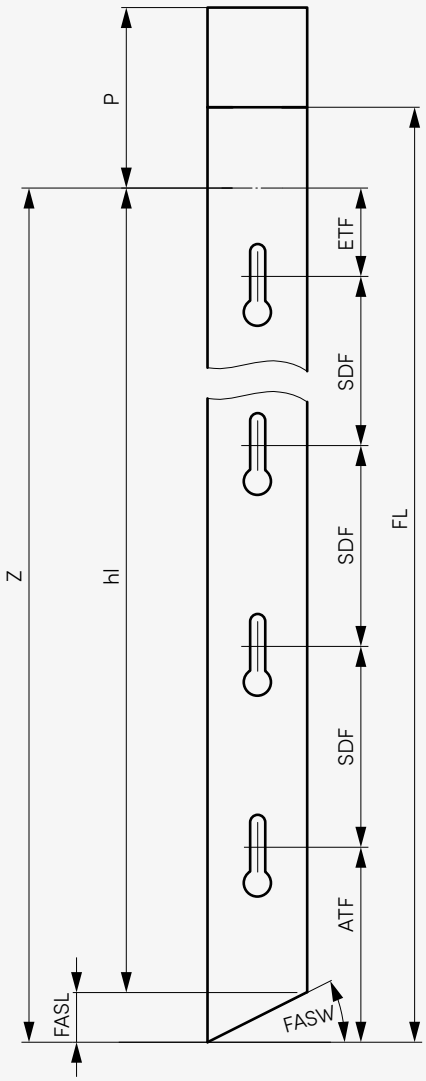

Irregular

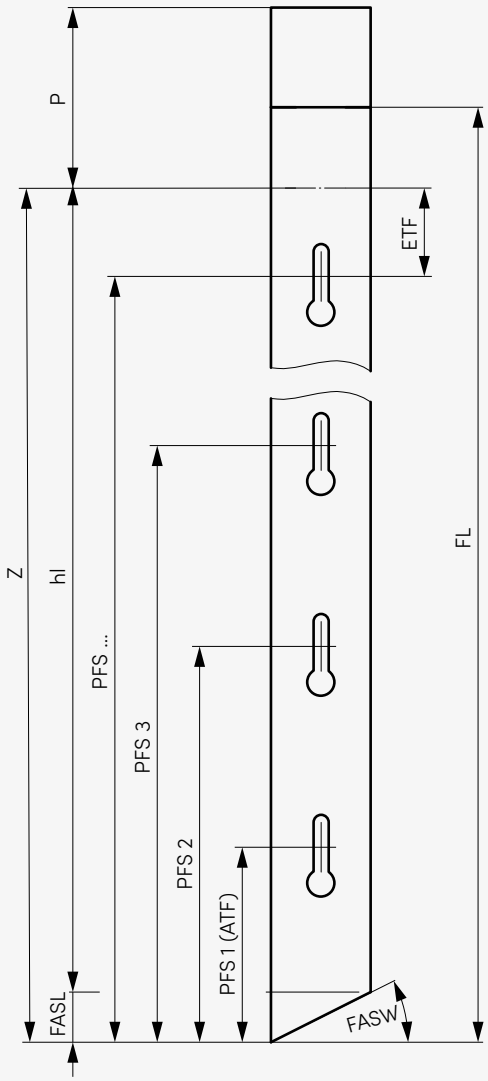

AS Number of slits
ATF Initial spacing guide rail (standard 200)
ETF Endspacing guide rail (standard 100)
FASL Guide rail facet length
FASW Guide rail facet angle
FL Guide length
PFS Slot position
SDF Slot distance guide rail: 100 ... 1200

Guide extension and facet 20
Guide rail fastenings 14

Fastening points

Transverse and holding force per fastening point at least 1000 N.

With guide rail extension and facet

Z	AS min.
≤1500	2
1501 ... 2700	3
2701 ... 3900	4
3901 ... 5100	5
>5100	6

Regular

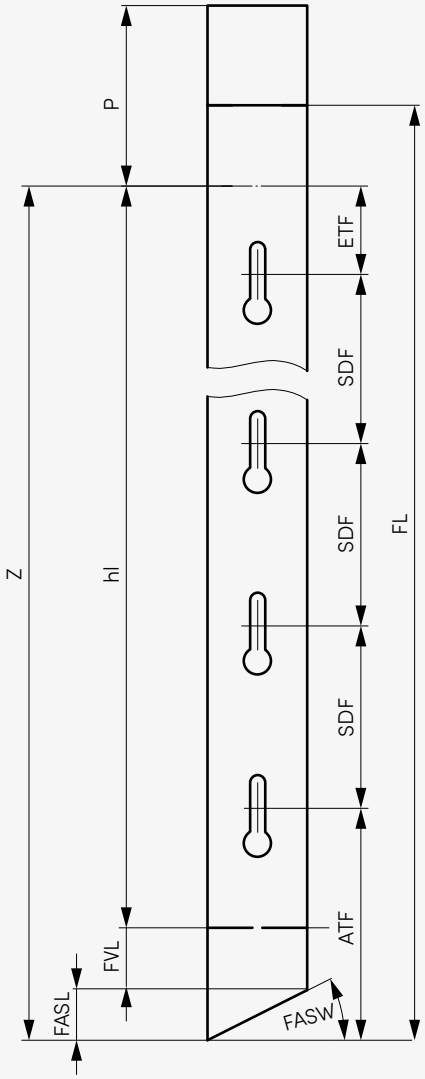

Irregular

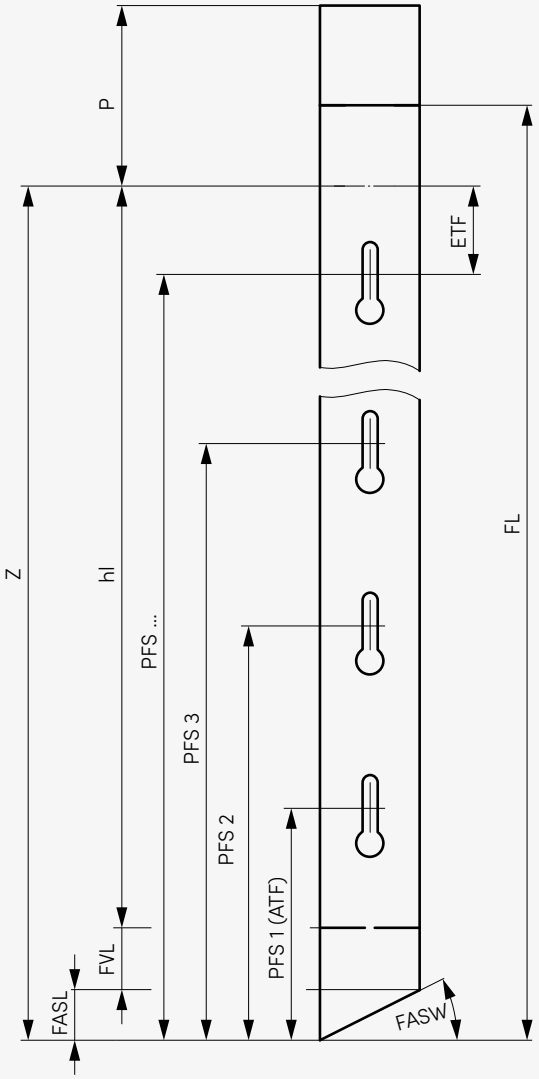

AS Number of slits
ATF Initial spacing guide rail (standard 200)
ETF Endspacing guide rail (standard 100)
FASL Guide rail facet length
FASW Guide rail facet angle

FL Guide length
FVL Guide rail extension
PFS Slot position
SDF Slot distance guide rail: 100 ... 1200

Guide extension and facet 20
Guide rail fastenings 14

Connected systems

System width

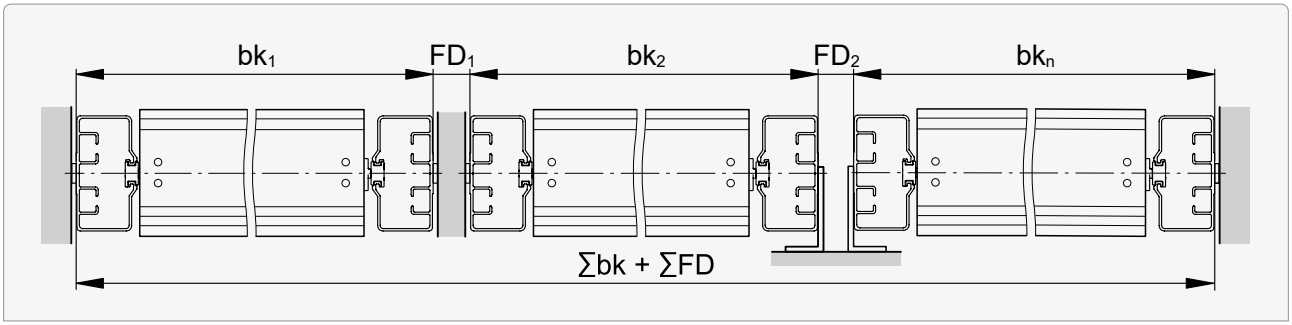

Distance between guides FD

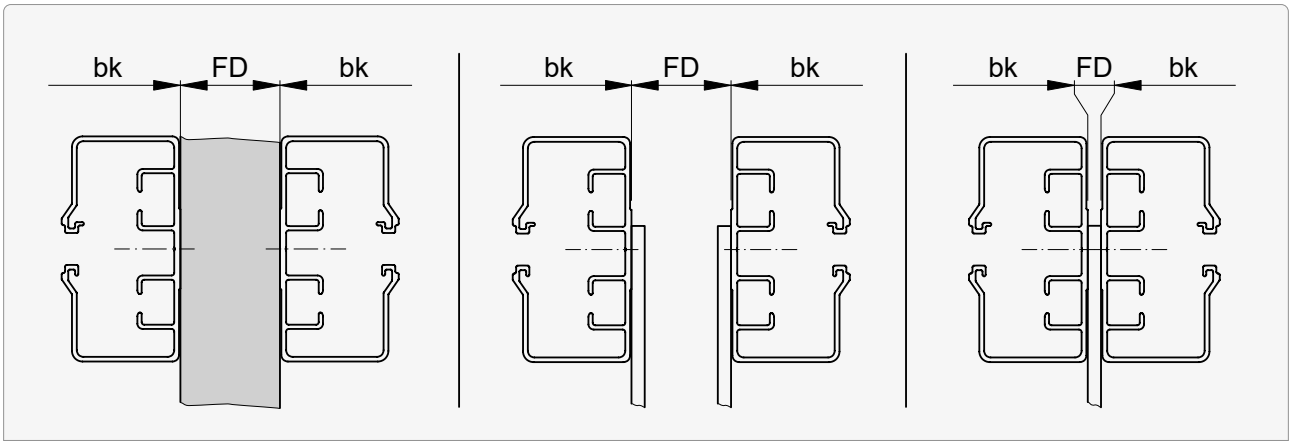

FD min.	FD max.
5	1000

Opening for connected blinds 28

Connected systems

Drive position

Gearbox

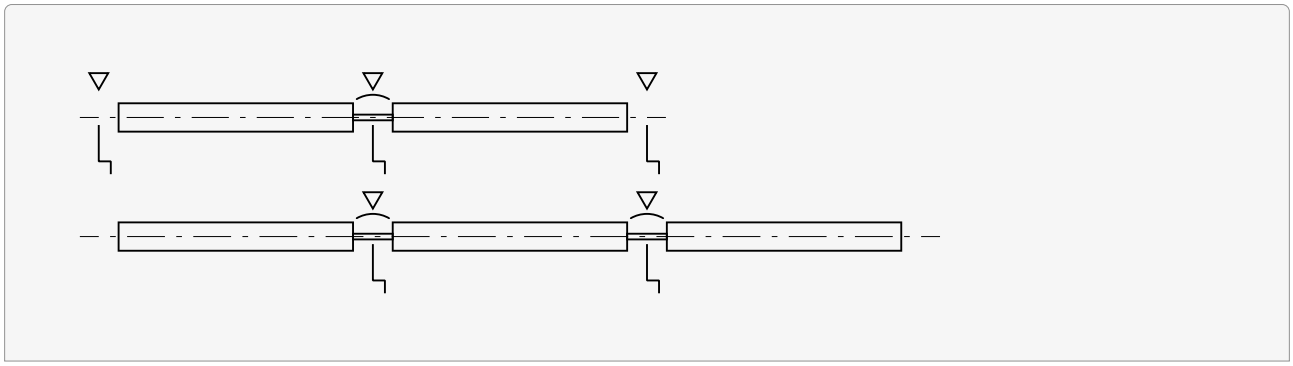

Motor

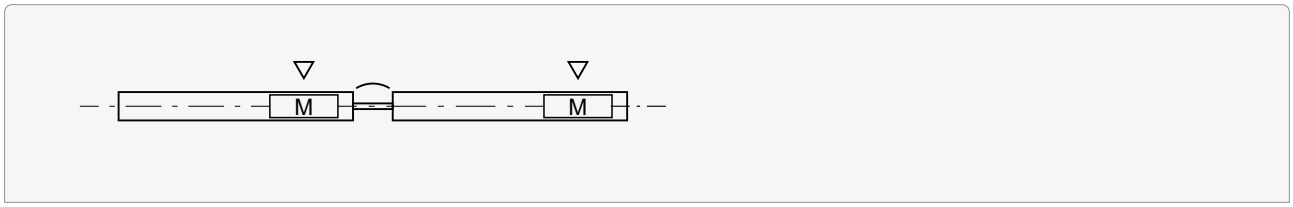

▼ Standard drive position
▽ Possible drive position

Opening for connected blinds

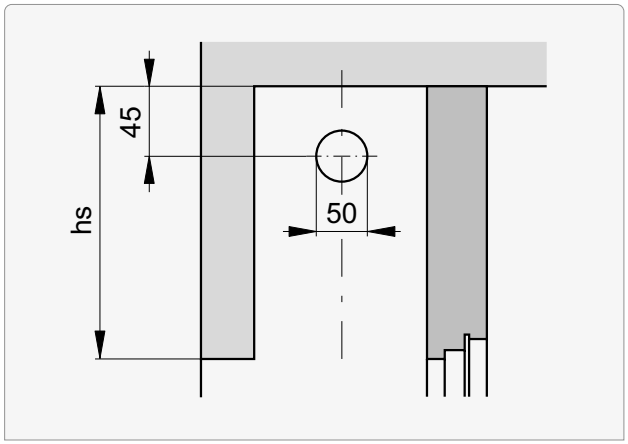

Technical data of motors

Performance characteristics

Type		Limit switch Type	Limit switch Number of	M [Nm]	n [1/min.]	P [W]	I [A]
Standard							
Elero Comfort							
ECM...	06.01	electronic	2	6	26	115	0.50
	09.01			9		156	0.68
	06.51	electronic	3	6		115	0.50
	09.51			9		156	0.68
ECB...	06.51	electronic	3	6	26	115	0.50
	09.51			9		156	0.68

I Current consumption
M Torque
n Rotational speed
P Power consumption

Grinotex® III | Grinotex® III Sinus

Specifications

Limit dimensions 31

Mounting situations

Built-in system 32
Built-in system with cover 32
Header dimensions Grinotex® III 33
Heights of package Grinotex® III 33
Header dimensions Grinotex® III Sinus 34
Heights of package Grinotex® III Sinus 34
Slat profiles 35
End rail 35
Beginning distance | Slot spacing 36
Housing fastening 37
Number of box supports 39
Darkening 40
Guide rail 41
Sections | Details 42
Sections for crank drive (MBMA) 43
Vertical connections | Standard motor position 44

Fastenings

Guide rail installation (principle) 49
Guide rail fastenings (principle) 51
Guide extension and facet 57
Guide rail cut-outs in windowsill area 58
Installation window 62
Fastening points 63

Drive

Connected systems 68
Technical data of motors 70

Limit dimensions

Single blind

Operation	Width min. (bk)	Width[1] max. (bk)	Height min. (hl)	Height max. (hl)	Surface[2] max. [m²]
Crank drive	600 800[3]	4000	380	4250	8*
Motor drive	760 825[4]				8

Connected systems

Operation	Width[1] max. (bk)	Height max. (hl)	Blinds max.	Blinds per system	Surface[2] max. [m²]
Crank drive[5]	10000	4250	3	2	8*
				3	6.5*
Motor drive	5500		2	2	8

[1] For buildings and high-rise structures, which are exposed to high winds, this maximum value should be decreased as required. Also see wind classes data sheet.

[2] If crank drive is in slat area: maximum surface area and crank position available on request.

[3] Gearbox in slat area.

[4] Motor drive with operating position.

[5] In the case of 3 connected blinds, the drive should be positioned between two blinds.

* with MBMA– on request

Definitions of dimensions 327

Built-in system

Vertical section: Grinotex® III

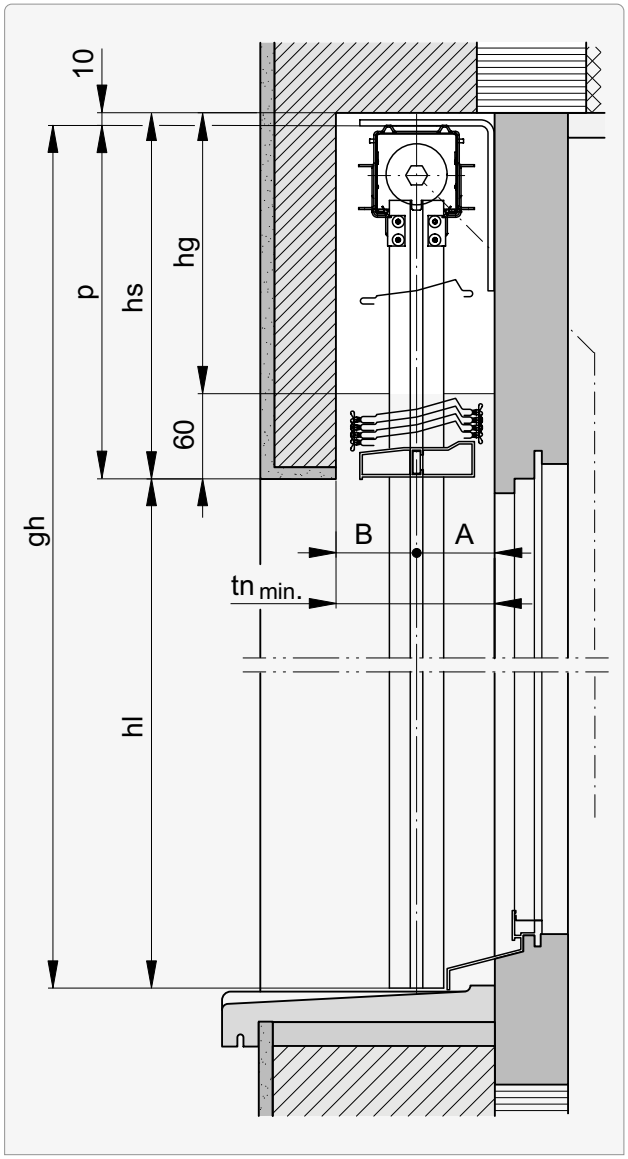

Horizontal section: Grinotex® III

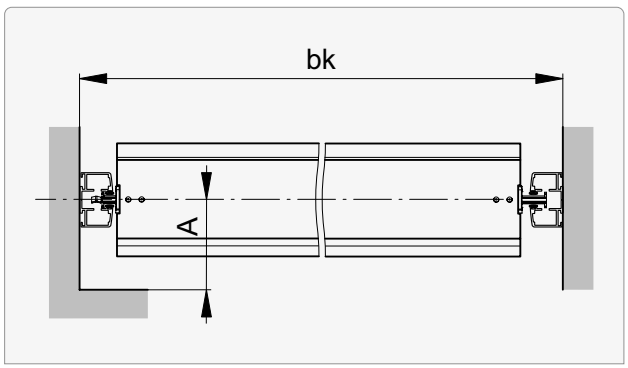

Built-in system with cover

Vertical section: Grinotex® III Sinus

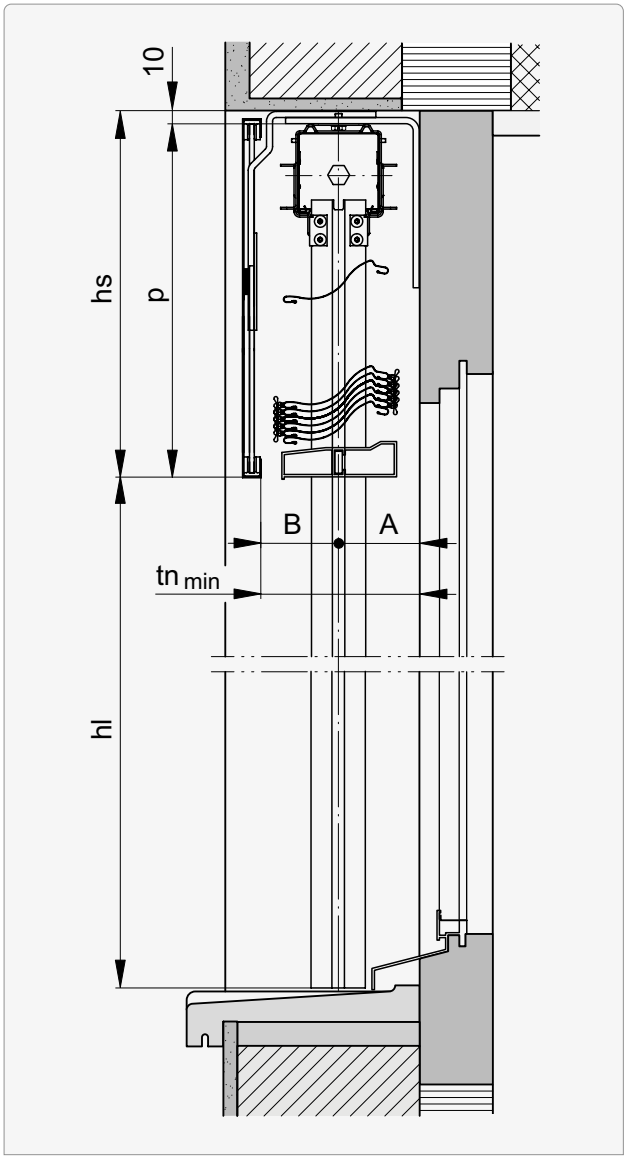

Horizontal section: Grinotex® III Sinus

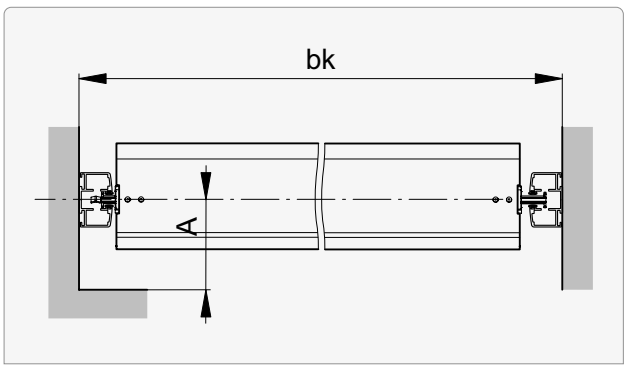

Sections | Details 42

Values for **A**, **B** and **tn** 33

Header dimensions Grinotex® III

hl →I	hs[1]									tn min.	A	B
	bk ≤2000	2001–2250	2251–2500	2501–2750	2751–3000	3001–3250	3250–3500	3501–3750	3751–4000			
1250	230	230	230	245	245	245	255	255	255			
1500	245	245	245	260	260	260	275	275	275			
1750	265	265	280	280	280	290	290	290	290			
2000	280	280	295	295	295	310	310	310	310			
2250	300	300	315	315	315	325	325	325	325			
2500	315	315	330	330	345	345	345	345				
2750	335	335	350	350	360	360				130*	65	65
3000	350	365	365	365	380							
3250	370	385	385	385								
3500	390	405	405									
3750	410	425	425									
4000	425	440										
4250	445	460										
End rail	23 mm	38 mm	50 mm									

Heights of package Grinotex® III

hl →I	p									tn min.	A	B
	bk ≤2000	2001–2250	2251–2500	2501–2750	2751–3000	3001–3250	3250–3500	3501–3750	3751–4000			
1250	220	220	220	235	235	235	245	245	245			
1500	235	235	235	250	250	250	265	265	265			
1750	255	255	270	270	270	280	280	280	280			
2000	270	270	285	285	285	300	300	300	300			
2250	290	290	305	305	305	315	315	315	315			
2500	305	305	320	320	335	335	335	335				
2750	325	325	340	340	350	350				130*	65	65
3000	340	355	355	355	370							
3250	330	375	375	375								
3500	380	395	395									
3750	400	415	415									
4000	415	430										
4250	435	450										
End rail	23 mm	38 mm	50 mm									

[1] With gearbox in slat area: **hs + 20**.

* + possible addition for protruding weatherboard or doorknobs.

Header dimensions are approximate values which may exhibit **negative or positive deviations** depending on the technical circumstances. **A dimensional tolerance of ±5 mm** is observed for the header height.

Header dimensions Grinotex® III Sinus

hl →I	hs[1]									tn min.	A	B
	bk ≤2000	2001–2250	2251–2500	2501–2750	2751–3000	3001–3250	3250–3500	3501–3750	3751–4000			
750	230	230	230	230	230	230	235	235	235			
1000	230	230	230	240	240	240	255	255	255			
1250	245	245	245	260	260	260	270	270	270			
1500	260	260	260	275	275	275	290	290	290			
1750	285	285	300	300	300	310	310	310	310			
2000	300	300	315	315	315	330	330	330	330			
2250	320	320	335	335	335	345	345	345	345			
2500	340	340	355	355	365	365	365	365		130*	65	65
2750	355	355	370	370	380	380						
3000	380	395	395	395	405							
3250	395	410	410	410								
3500	410	425	425									
3750	430	445	445									
4000	455	470										
4250	470	485										
End rail	23 mm	38 mm				50 mm						

Heights of package Grinotex® III Sinus

hl →I	p									tn min.	A	B
	bk ≤2000	2001–2250	2251–2500	2501–2750	2751–3000	3001–3250	3250–3500	3501–3750	3751–4000			
750	220	220	220	220	220	220	225	225	225			
1000	220	220	220	230	230	230	245	245	245			
1250	235	235	235	250	250	250	260	260	260			
1500	250	250	250	265	265	265	280	280	280			
1750	275	275	290	290	290	300	300	300	300			
2000	290	290	305	305	305	320	320	320	320			
2250	310	310	325	325	325	335	335	335	335			
2500	330	330	345	345	355	355	355	355		130*	65	65
2750	345	345	360	360	370	370						
3000	370	385	385	385	395							
3250	385	400	400	400								
3500	400	415	415									
3750	420	435	435									
4000	445	460										
4250	460	475										
End rail	23 mm	38 mm				50 mm						

[1] With gearbox in slat area: **hs + 20**.

* + possible addition for protruding weatherboard or doorknobs.

Header dimensions are approximate values which may exhibit **negative or positive deviations** depending on the technical circumstances. **A dimensional tolerance of ±5 mm** is observed for the header height.

Slat profiles

Grinotex® III

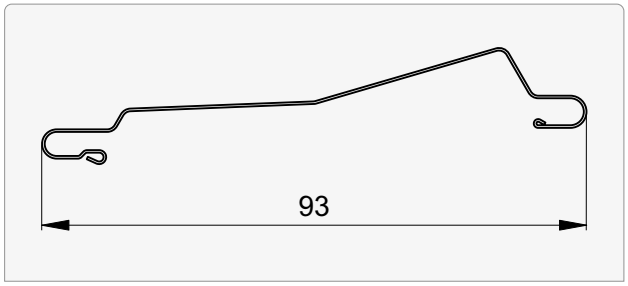

Grinotex® III Sinus

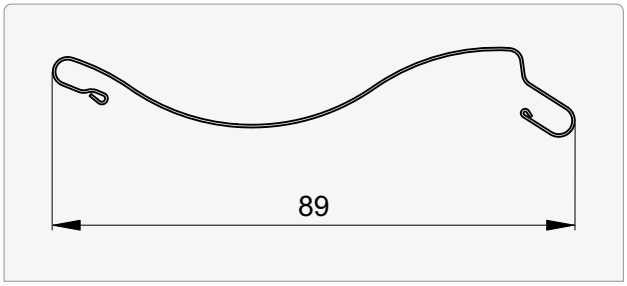

End rail

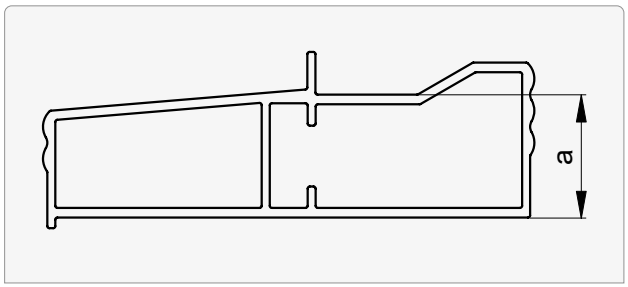

a
23
38
50

Beginning distance | Slot spacing

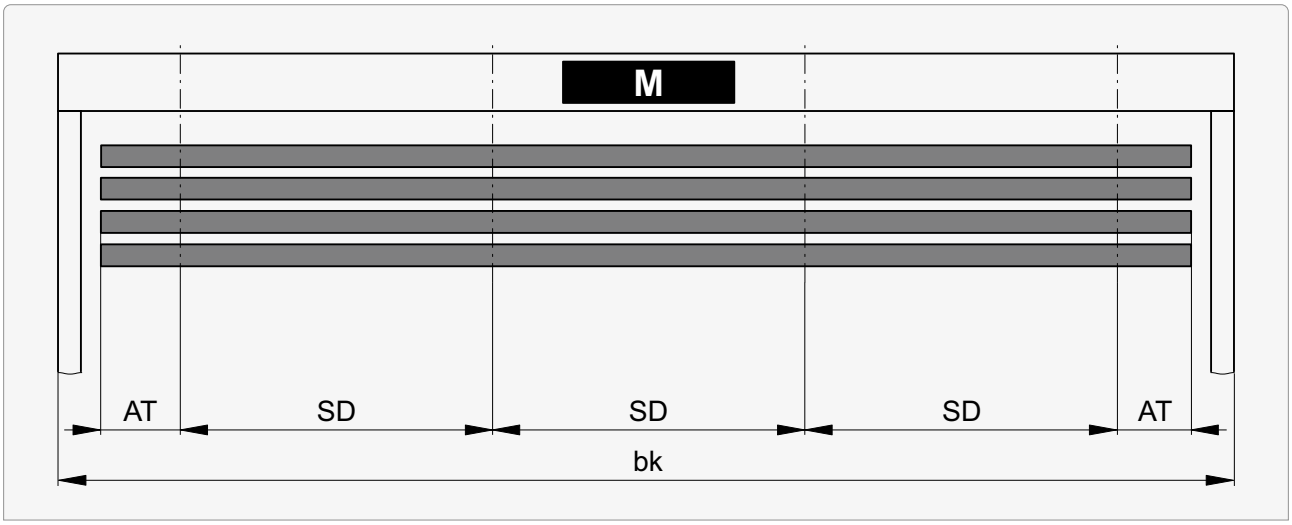

bk	AT min.		SD min.	SD max.
	without operating position	with operating position		
≤750	100	130	335*	800*
751 ... 1000	120	130		
>1000	200	200		
Special	80[1] / 250[1]	110[1] / 250[1]		

[1] on request

* Standard slot spacing machine fabrication

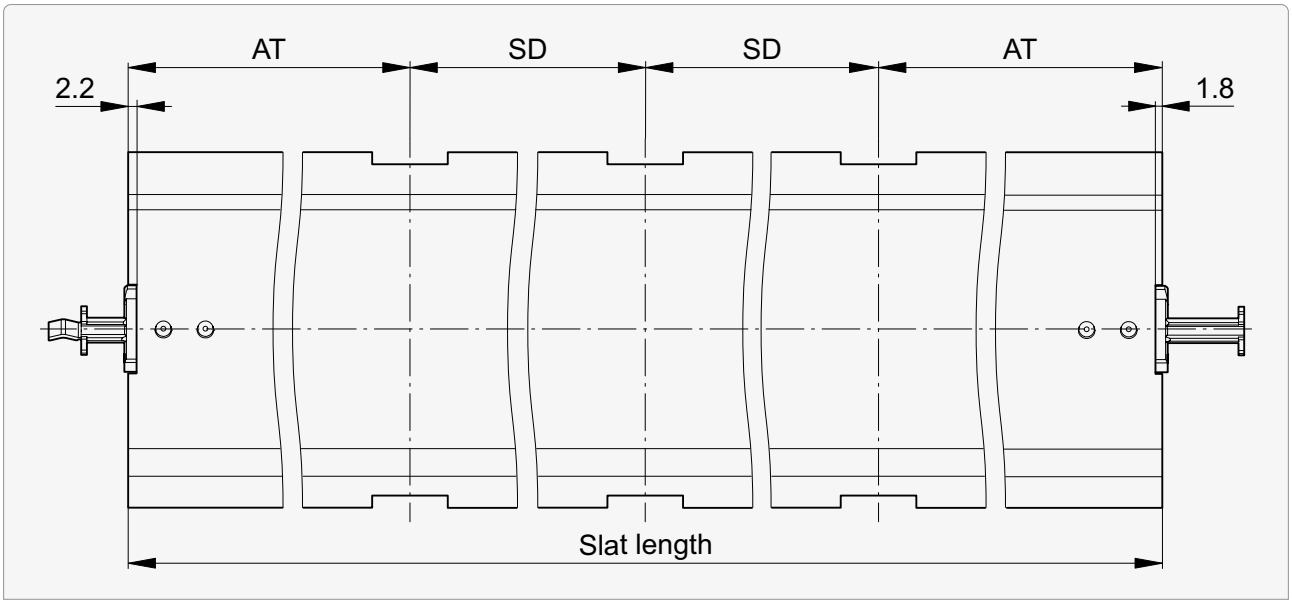

AT Beginning distance
Distance from beginning of slat to centre of bearing

SD Slot spacing
Distance from centre of bearing (slot) to centre of bearing (slot)

Housing fastening

Transverse and holding force per fastening point at least 700 N.

At top NO

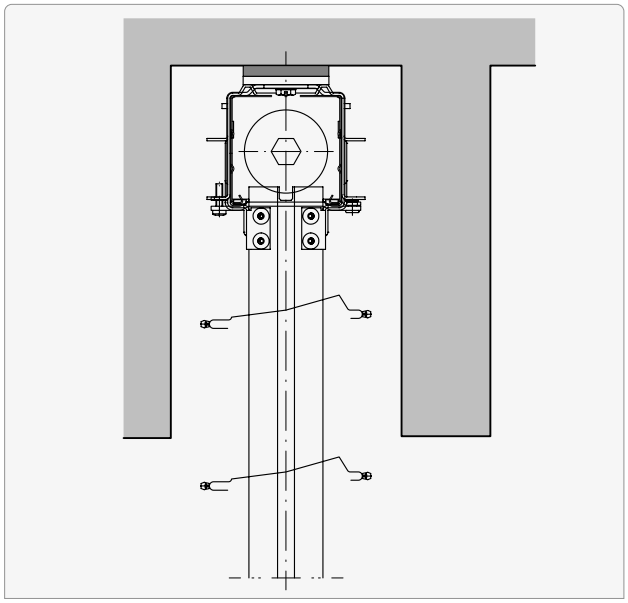

Box support KT

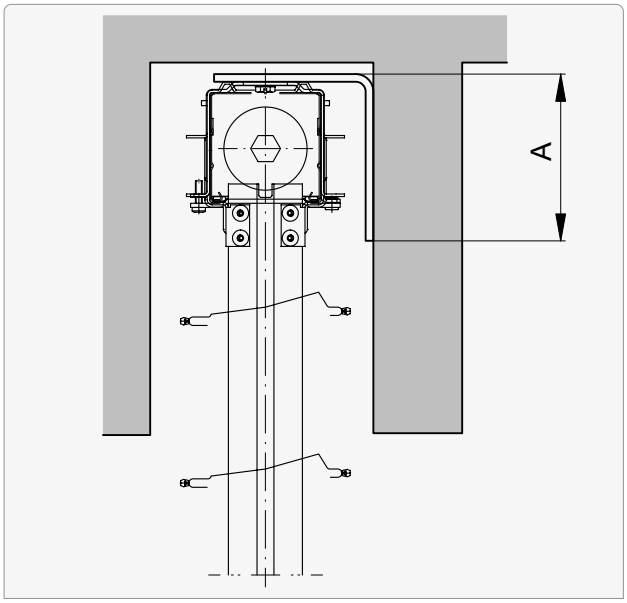

Box support for type KT, for small headers*

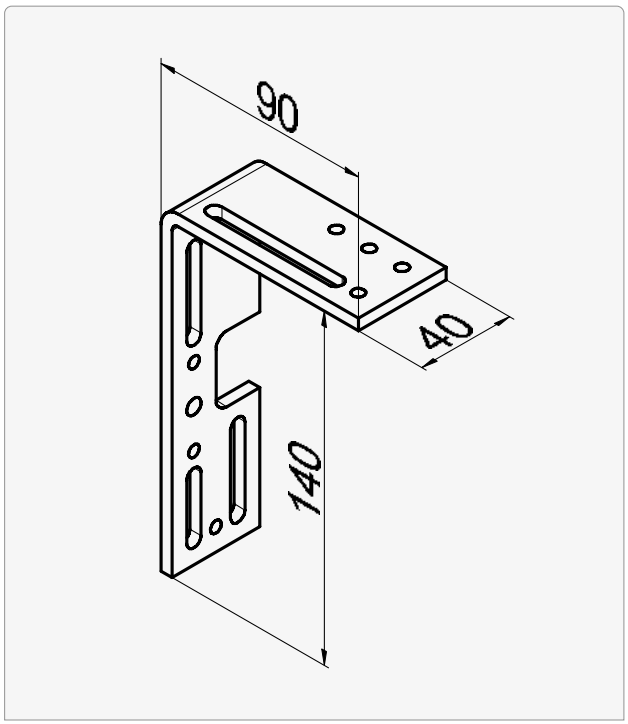

Box support for type KT

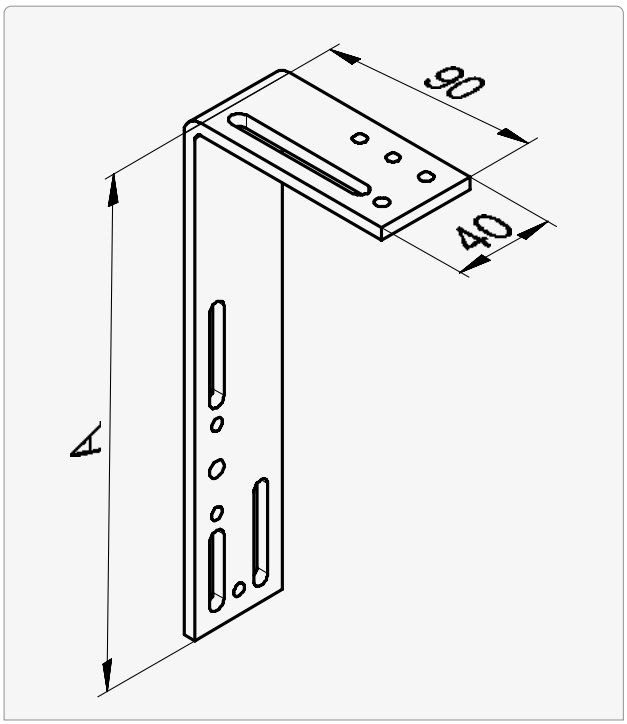

A
140

A
200
260

* Header 100

Housing fastening

Transverse and holding force per fastening point at least 700 N.

Double box support DR

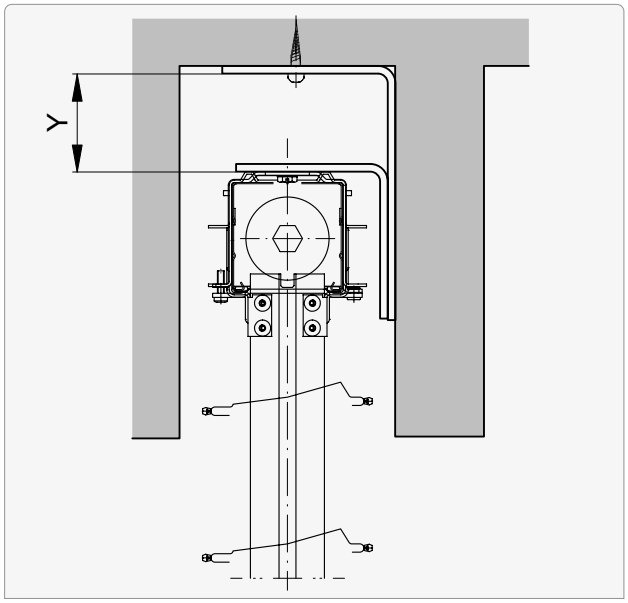

Double box support for type DR

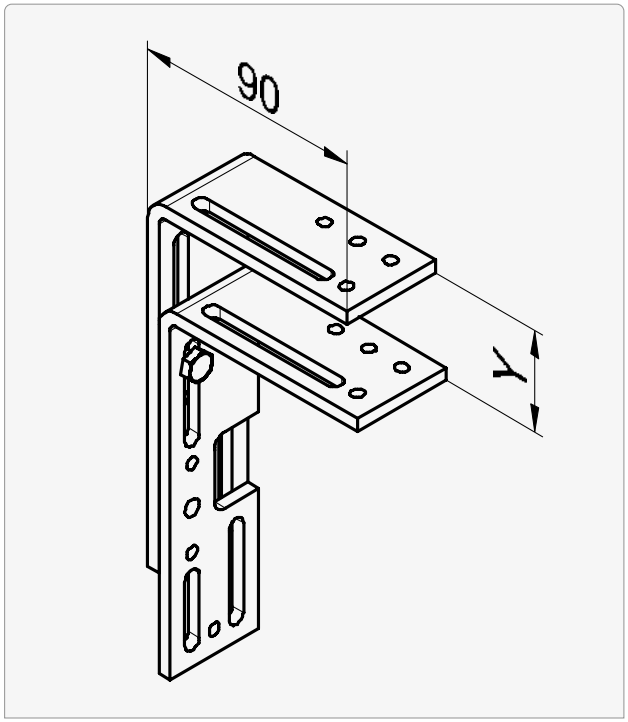

Y
10 ... 75
75 ... 135
135 ... 200

Gallery clip GB

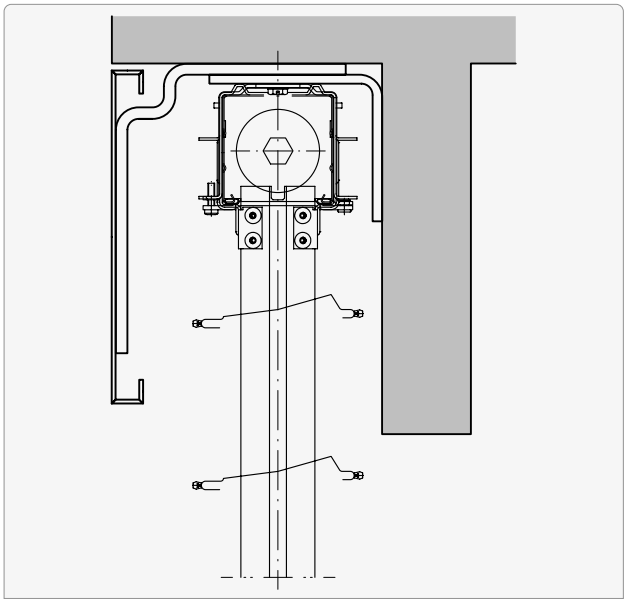

Gallery clip for type GB

See additional documentation at the Griesser Download Center:

Tech Guide "Covers"

Number of box supports

bk	Quantity
≤ 2000*	0
2001 … 3000	1
3001 … 4000	2
> 4000	3

* **bk ≤ 1500** with **motor > 9 Nm**

Darkening

Horizontal: Double lip-seal

Situation A

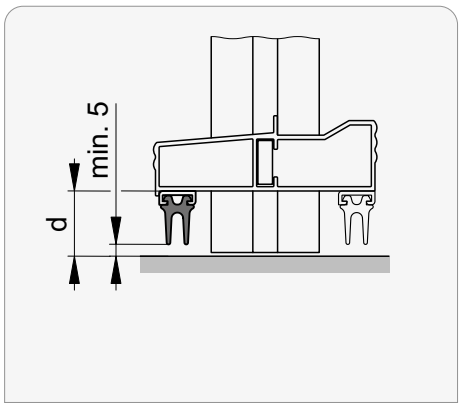

d
≥25

Situation B

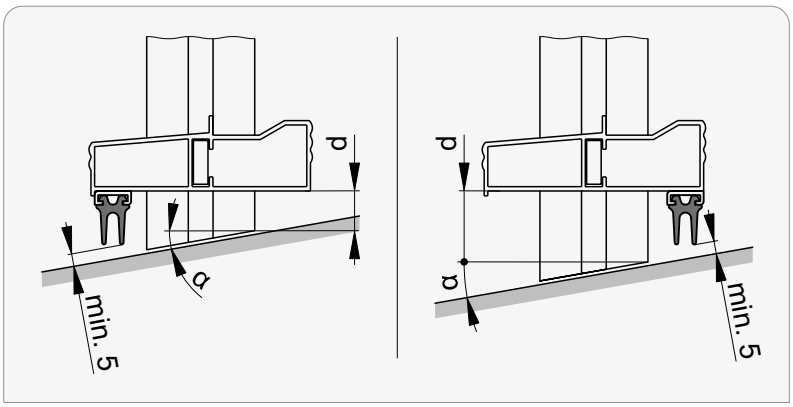

outside	
α	d
1 … 7	30
3 … 12	25
8 … 15	20
13 … 15	15

inside	
α	d
1 … 8	30
1 … 21	35
9 … 32	40
21 … 40	45
30 … 46	50 (max.)
47 … 60	–

Guide rail

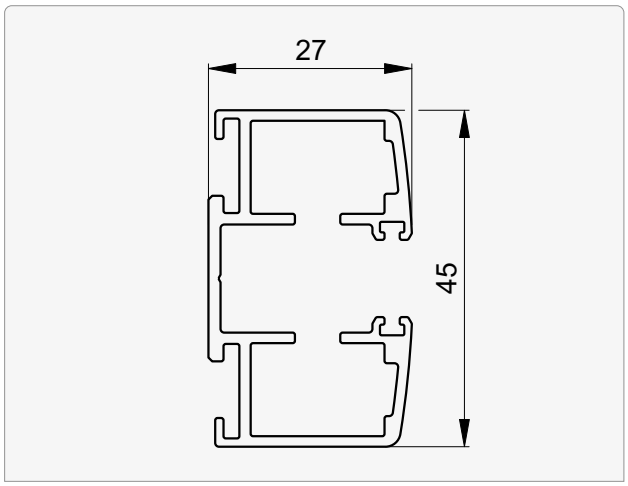

Distance between guides **FD** **68**
Fastening points **63**
Guide extension and facet **57**
Guide rail fastenings **51**
Guide rail cut-outs in windowsill area **58**
Installation window **62**
Integrated guides **50**

Sections | Details

Horizontal section

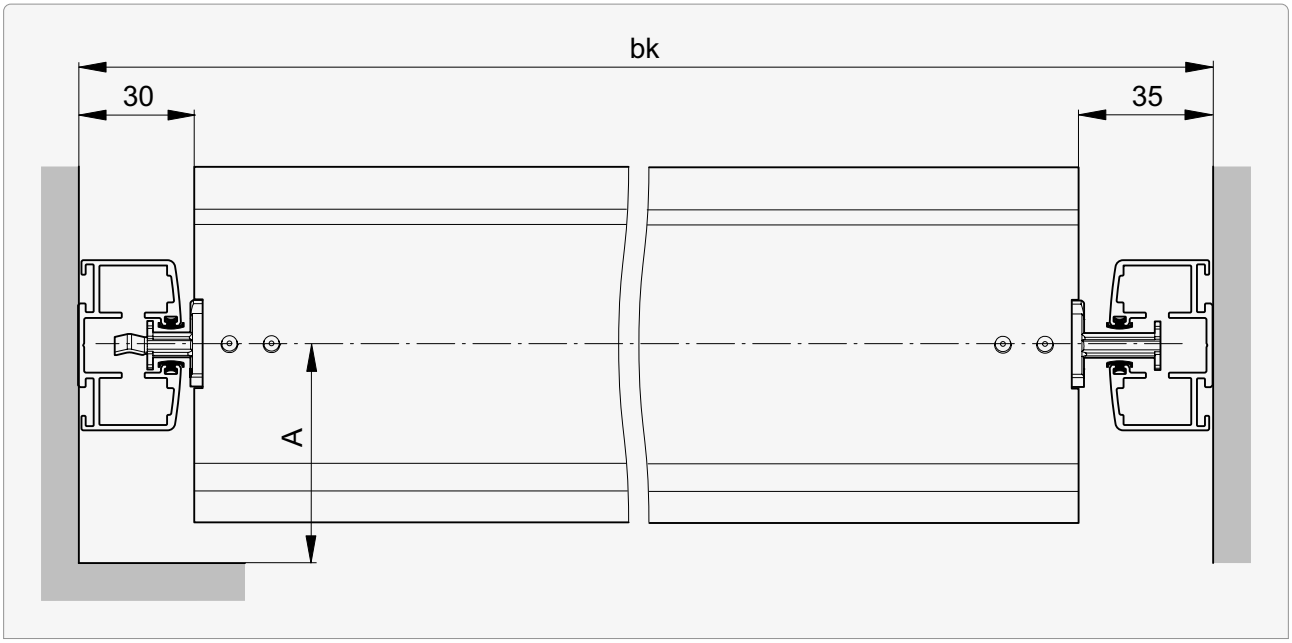

Value for **A** **33**

Detail for bottom

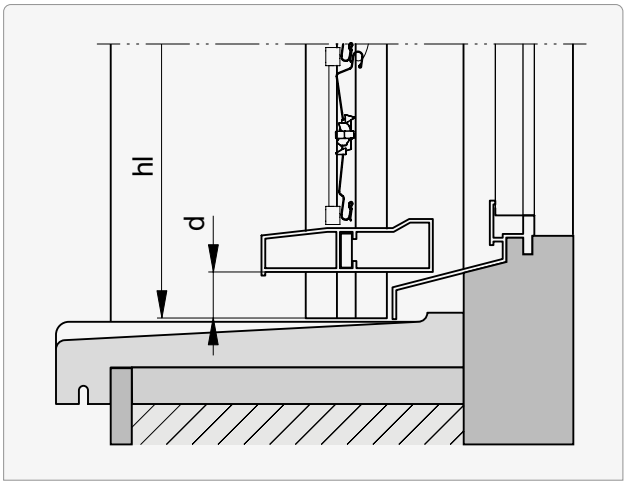

d (d-dimension)
5 ... 50 +5/–3
in 5 mm steps | Standard: 20

d-dimension may vary with different blind dimensions.

Sections for crank drive (MBMA)

outside bk

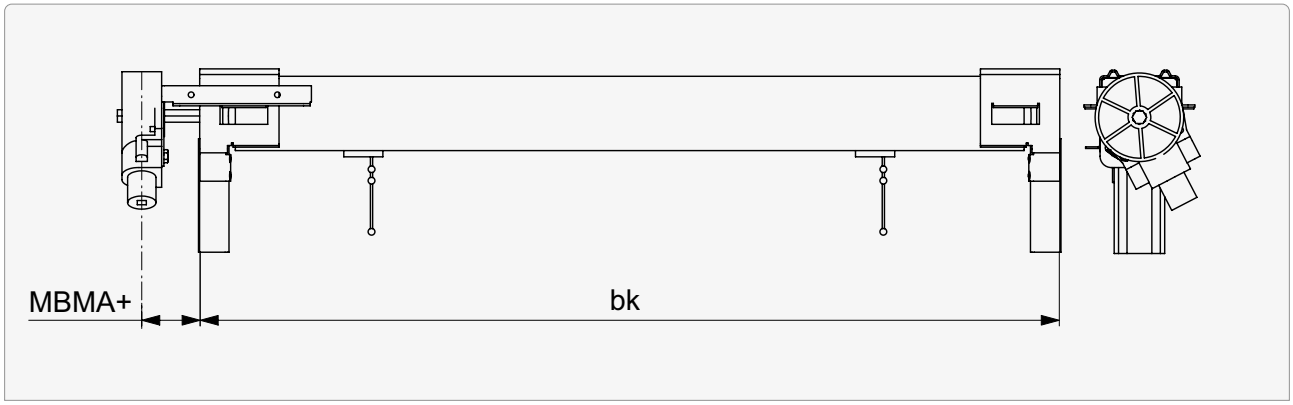

within bk

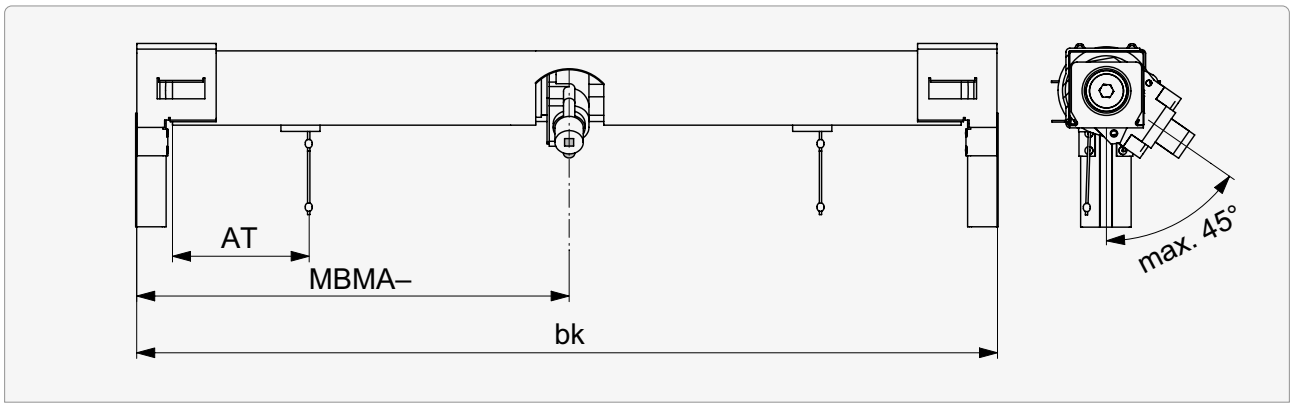

Version	MBMA+	MBMA–	Width max. (bk)	AT
without operating position	25 ... 100	95 + AT ... (bk / 2)	≤ 750	100
			751 ... 1000	120
			> 1000	200
with operating position		125 + AT ... (bk / 2)	≤ 750	130
			751 ... 1000	130
			> 1000	200

Vertical connections | Standard motor position

Number of bearings

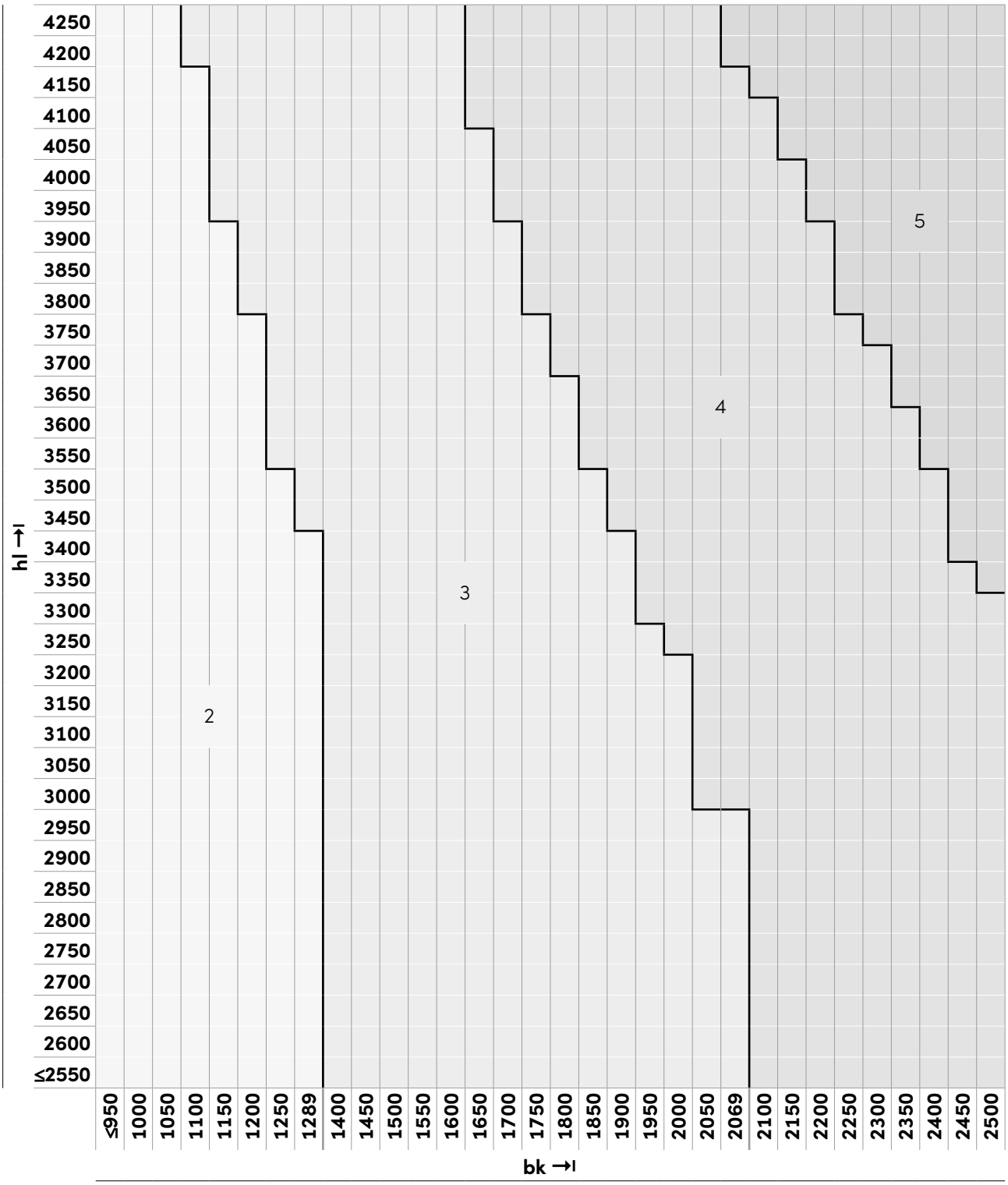

Standard motor position 48

Vertical connections | Standard motor position

Number of bearings

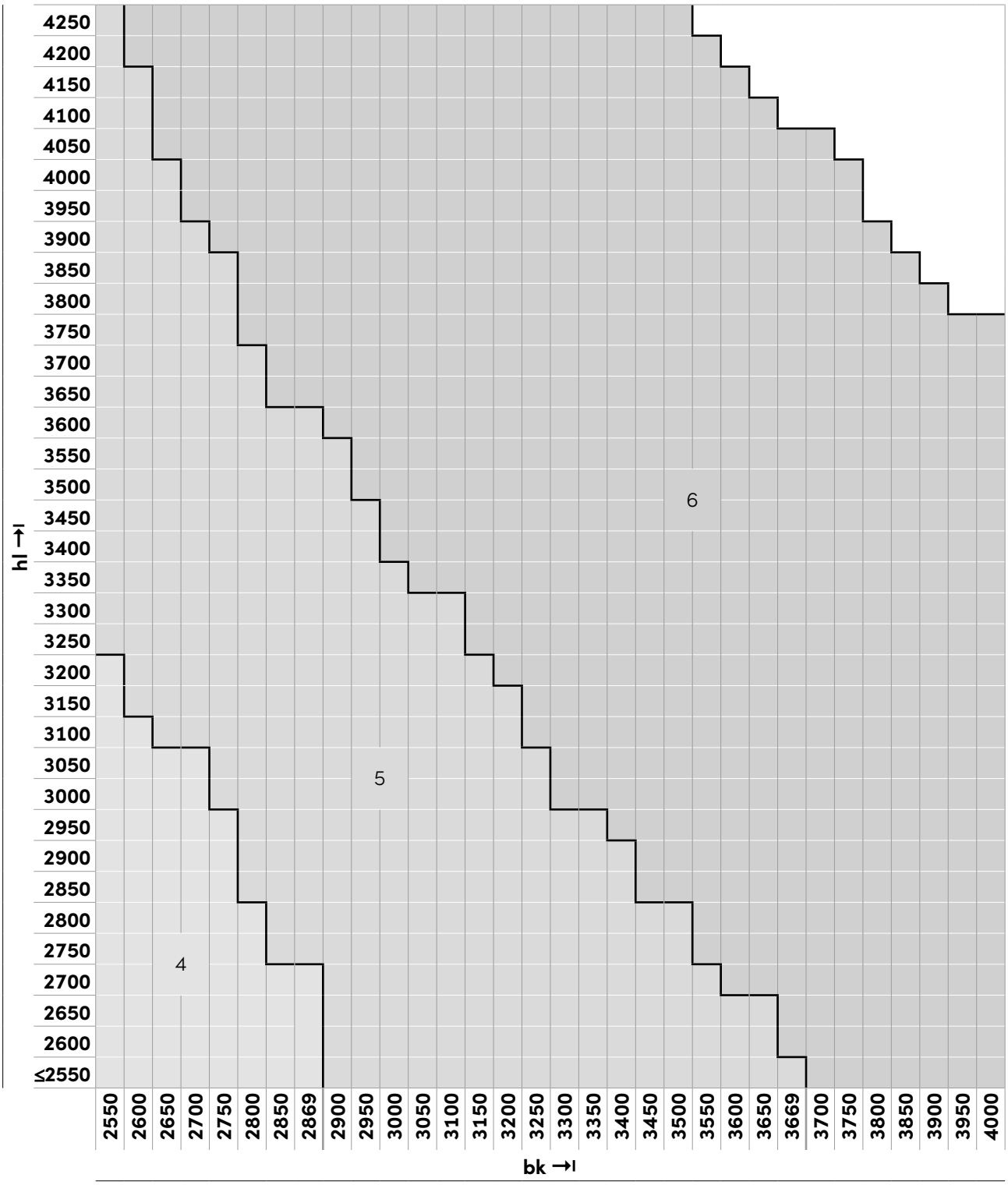

Vertical connections | Standard motor position

Number of bearings

Sinus

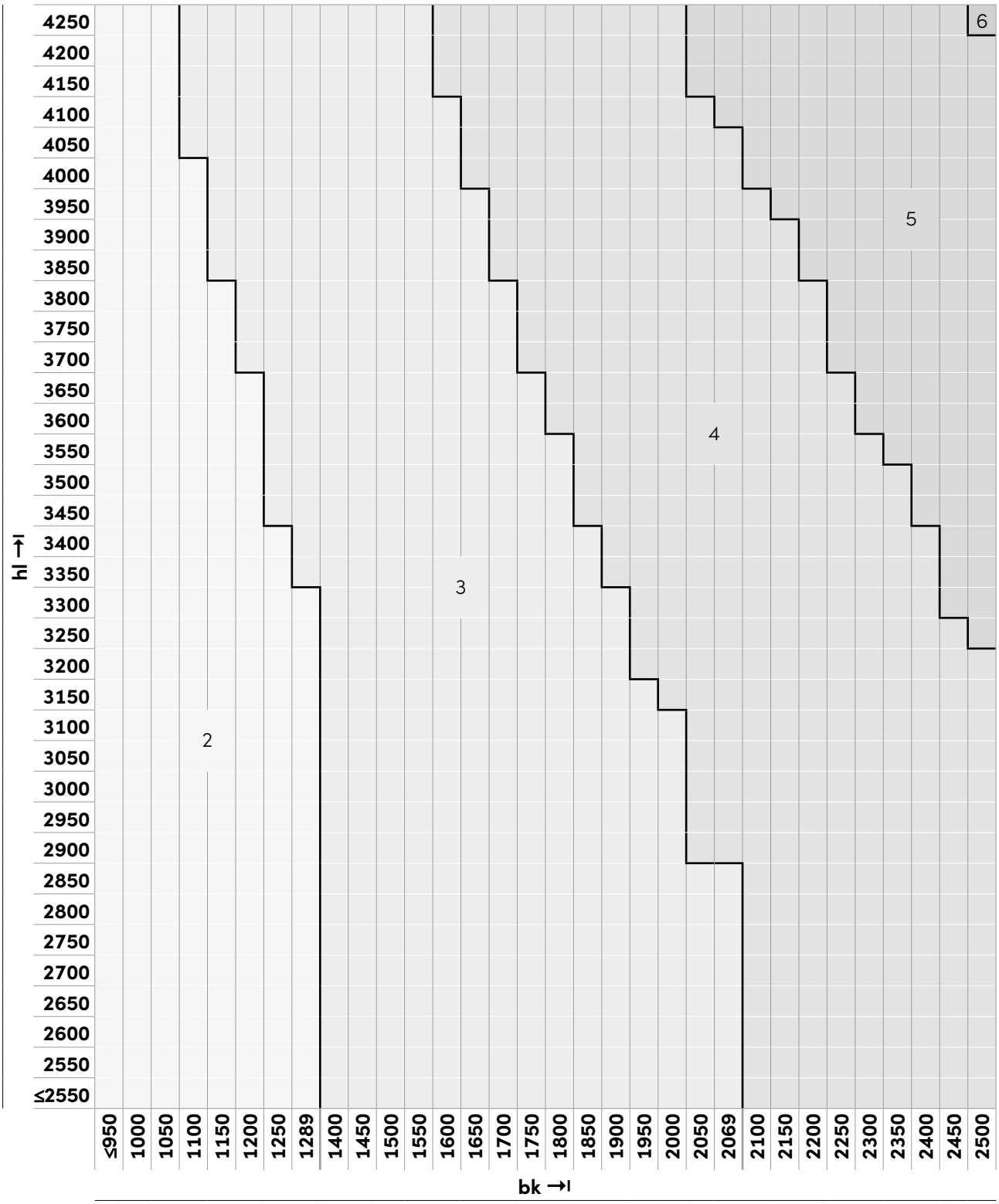

Standard motor position 48

Vertical connections | Standard motor position

Number of bearings

Sinus

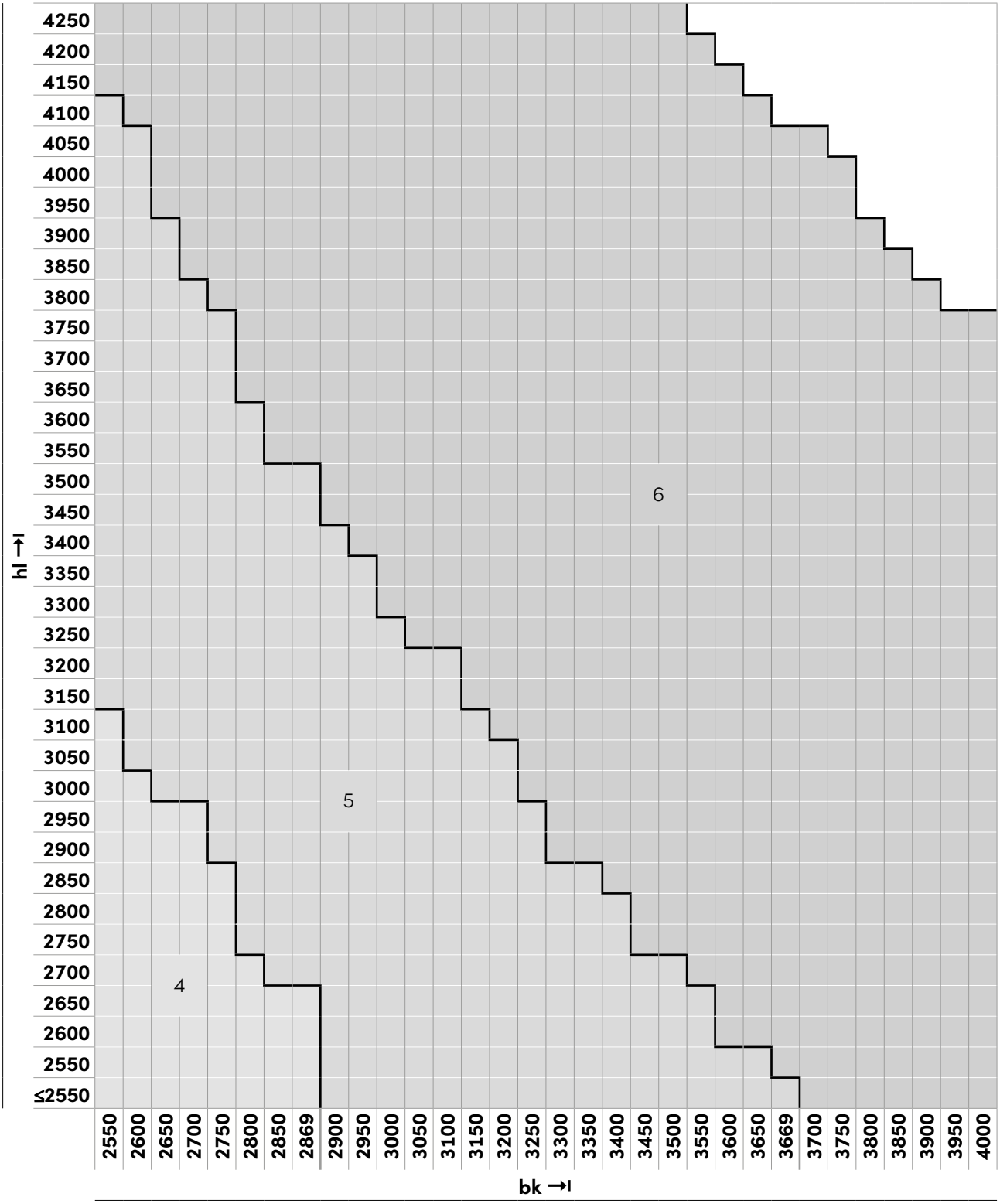

Vertical connections | Standard motor position

Standard motor position

Number of bearings	Standard motor position
2	
3	
4	
5	
6	

Bearing
M Standard motor position
M Possible motor position (on request)

Guide rail installation (principle)

Guides attached (to soffit) | Type A

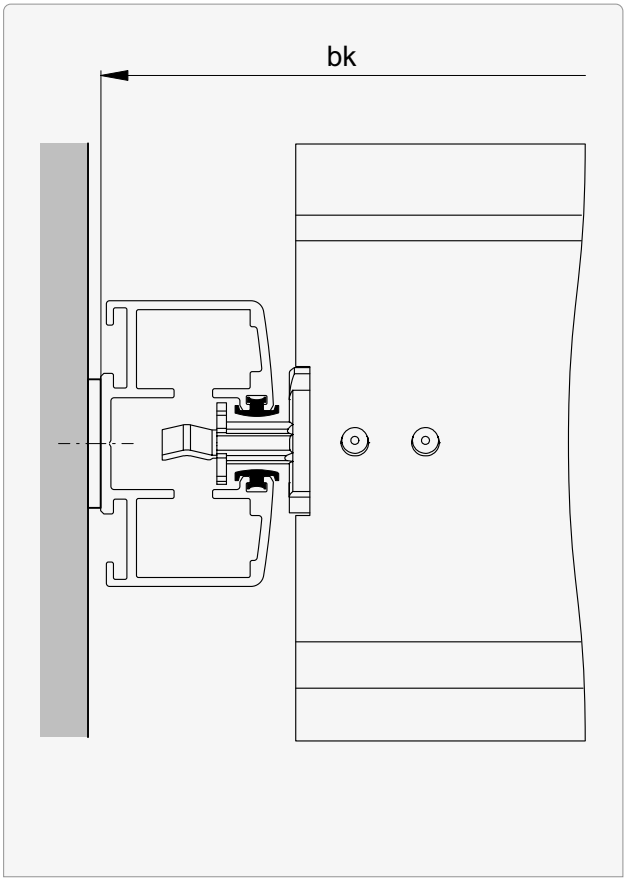

Guides suspended

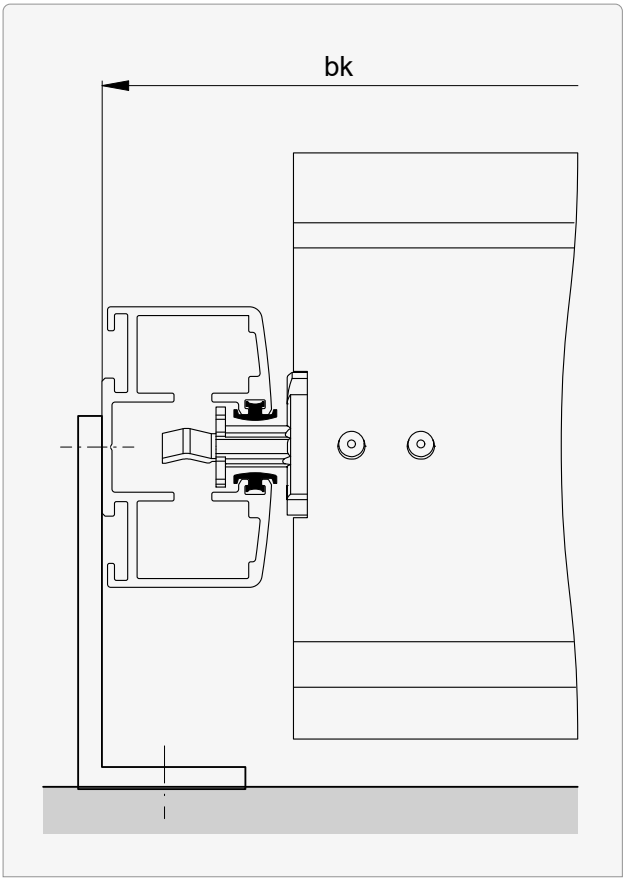

Observe possible guide rail spacer for **bk**.
Standard: 2 mm

Guide rail installation (principle)

Guides recessed

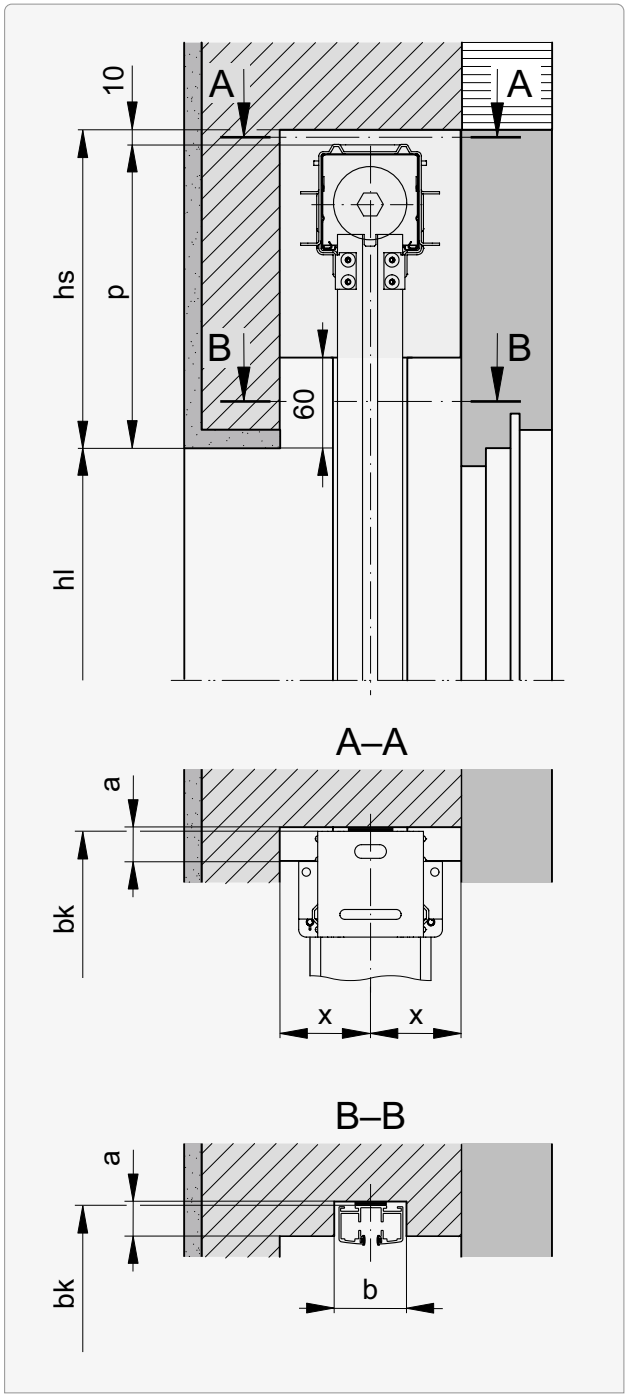

Two-part guides required!

Only possible if **hl > 1135**

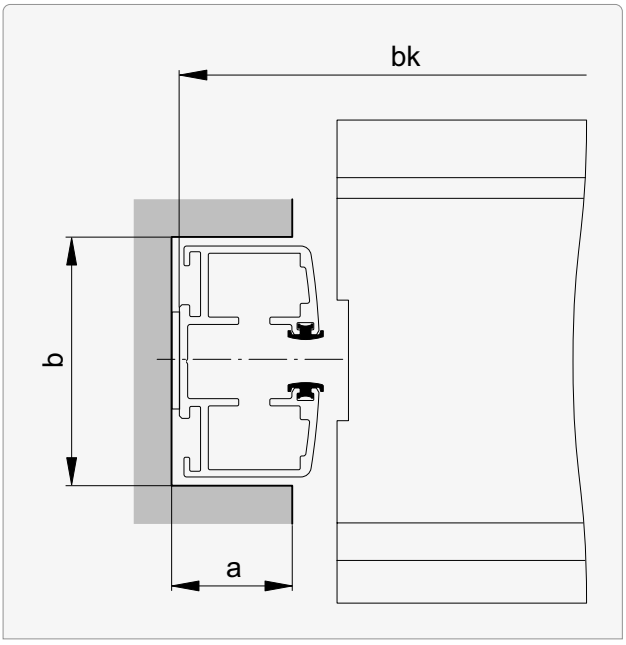

Version	x min.
Crank drive	60
Motor drive	

a	b
≤ 20	≥ 50

Guide rail fastenings (principle)

Overview

Type														
A	B	Bd	C	Cd	E	F	G	H	Kv	M	T	Tv	V	Wv
●	●	●	●	●	●	●	–	–	–	–	●	–	●	–

● applicable without restrictions

A Soffit installation

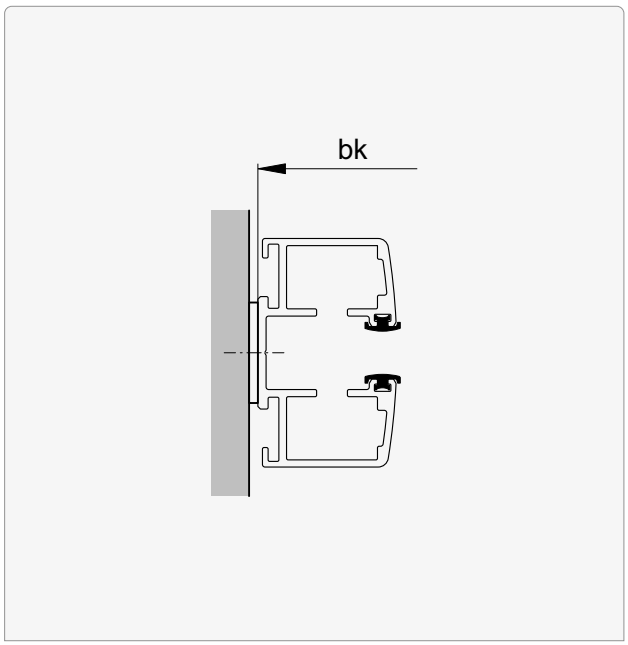

Transverse and holding force per fastening point at least 1000 N.

Observe possible guide rail spacer for **bk**.
Standard: 2 mm

Guide rail fastenings (principle)

B Installation with fastening bracket

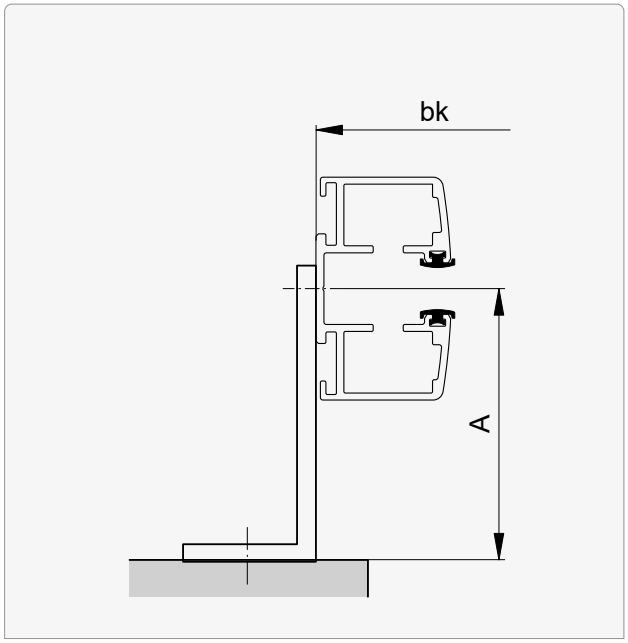

Bracket outwards

C Installation with fastening bracket

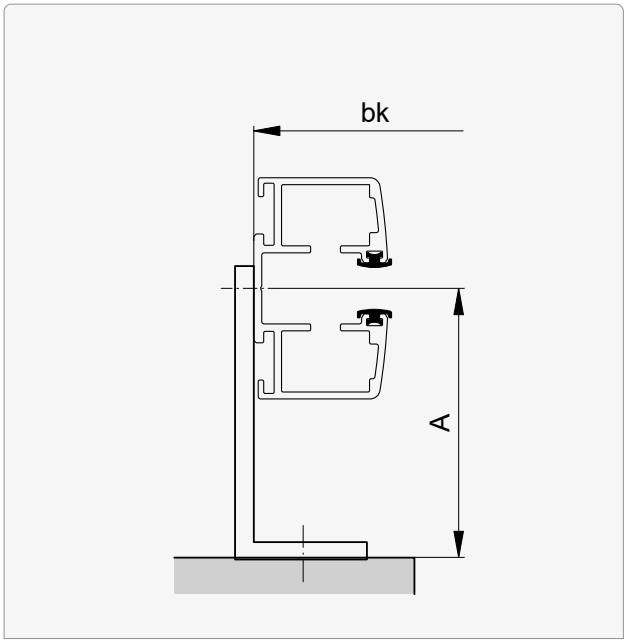

Bracket inwards

Fastening bracket for types B and C

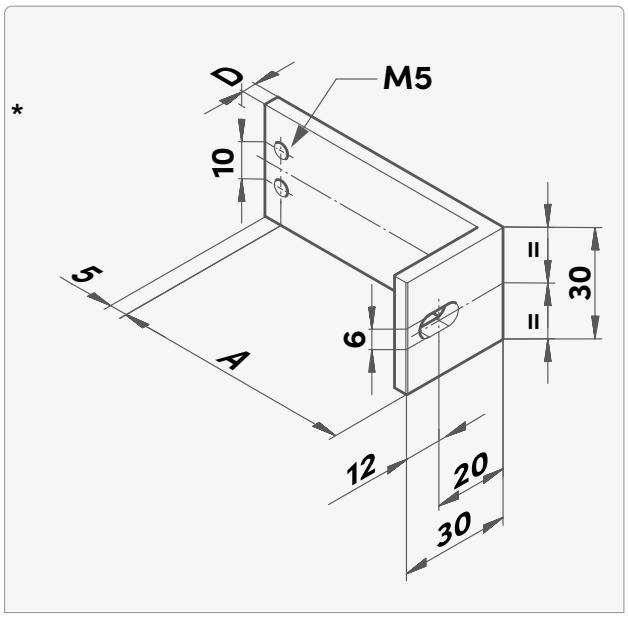

A*	D
20 ... 115	4

For suspended guide rails always with **brackets 70 mm**.

Transverse force at least 1000 N and holding force:

A*	bk < 1.5 m	bk < 2.5 m	bk < 4.0 m
0 ... 45	1000 N	1000 N	1000 N
46 ... 90	1000 N	1200 N	1000 N
91 ... 205	1800 N	2600 N	2000 N
206 ... 300	2600 N	3800 N	3000 N

* in 5 mm steps

Fastening bracket 70 mm for types B and C

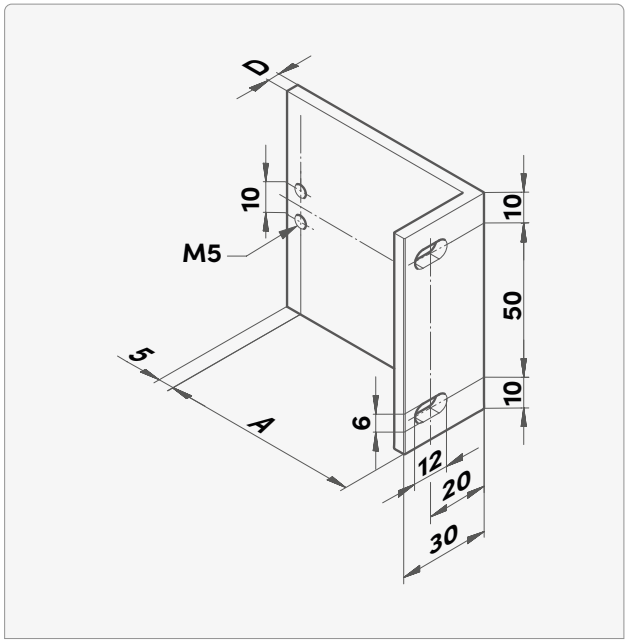

A*	D
20 ... 115	4
120 ... 215	5

Transverse force at least 1000 N and holding force at least 3500 N per fastening point.

If the **projection is ≥120**, all products are fastened with a **70 mm bracket**.

* in 5 mm steps

Guide rail fastenings (principle)

Bd Installation with continuous fastening bracket

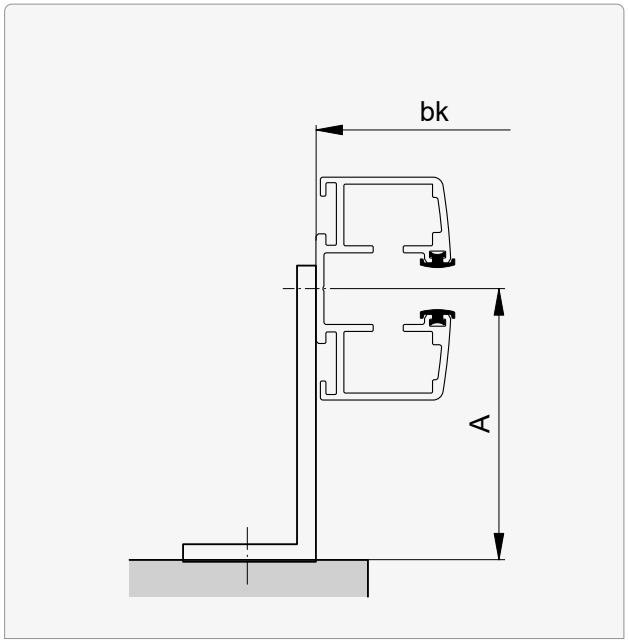

Bracket outwards

Cd Installation with continuous fastening bracket

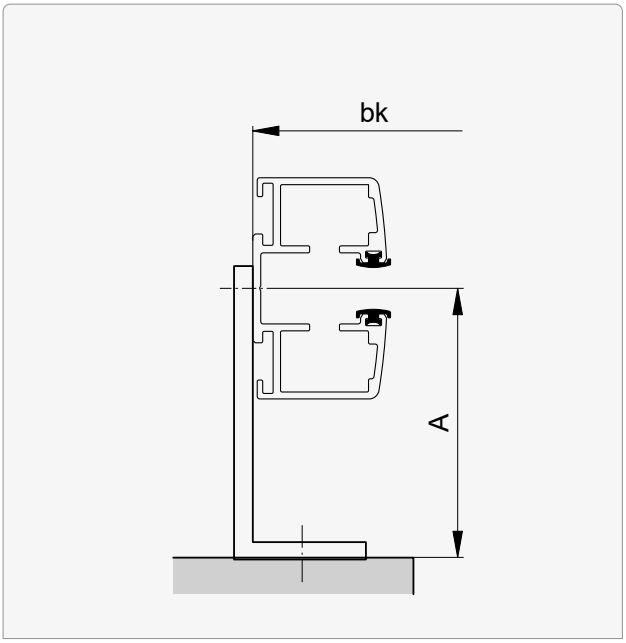

Bracket inwards

Continuous fastening bracket for types Bd and Cd

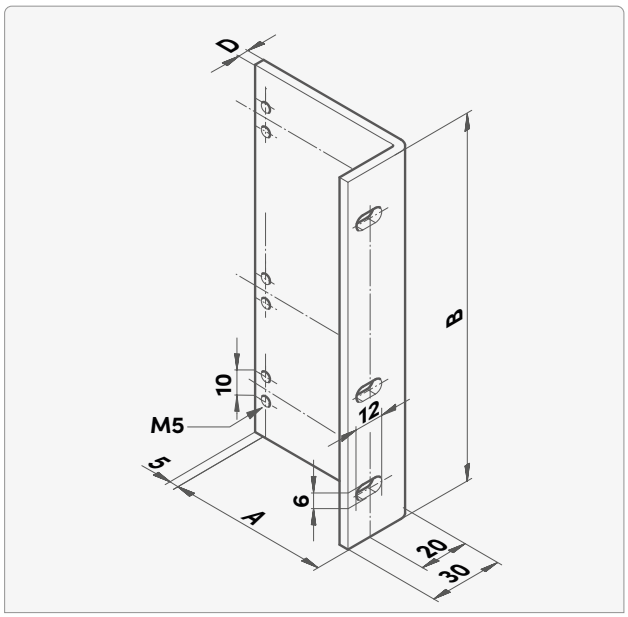

A*	D
20 ... 300	always 4

Transverse force at least 1000 N and holding force:

A*	bk < 1.5 m	bk < 2.5 m	bk < 4.0 m
0 ... 45	1500 N	2100 N	1600 N
46 ... 90	3000 N	4200 N	3200 N
91 ... 205	6600 N	9600 N	7200 N
206 ... 300	9650 N	14000 N	10500 N

* in 5 mm steps

Guide rail fastenings (principle)

E | F Installation with fastening lug

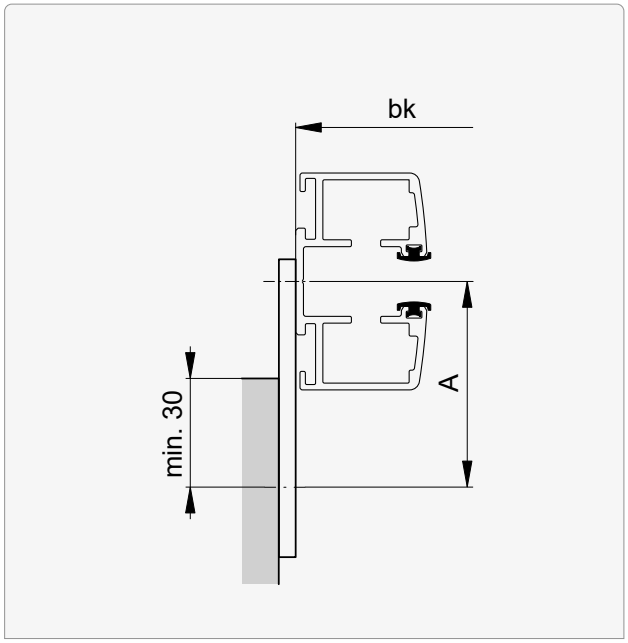

inwards / outwards

T Installation with T-bracket

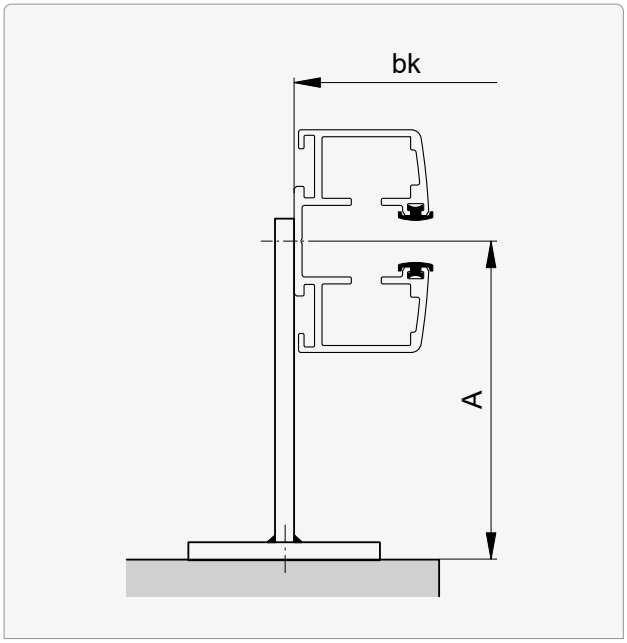

Fastening lug for type E | F

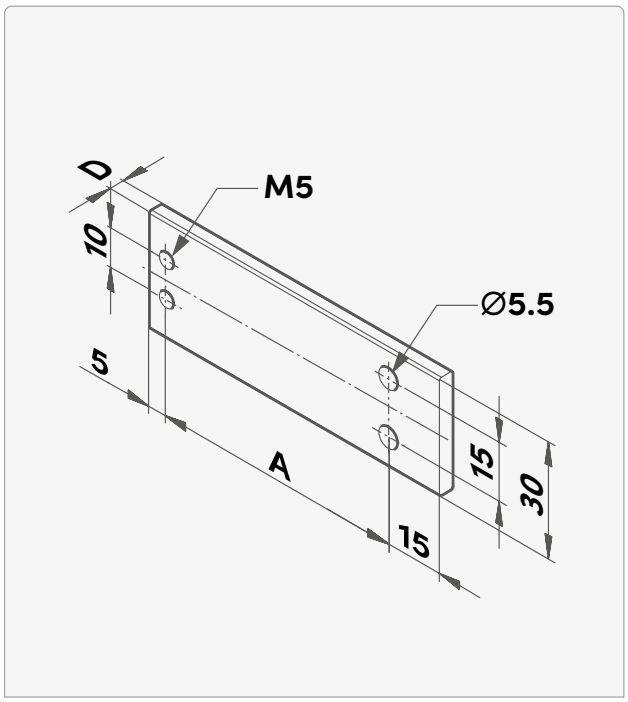

A*	D
50 ... 115	4
120 ... 125	5

Transverse force at least 1000 N and holding force at least 3000 N per fastening point.

T-bracket for type T

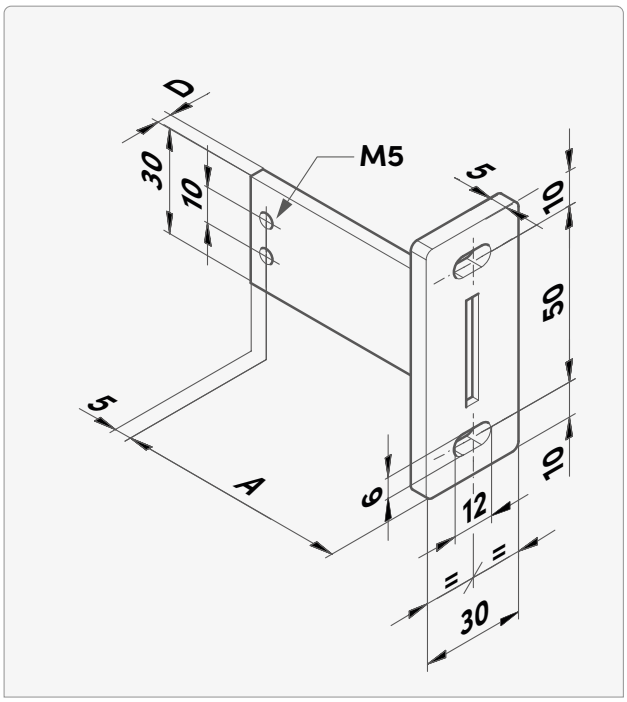

A*	D
20 ... 115	4
120 ... 215	5

Transverse force at least 1000 N and holding force at least 3300 N per fastening point.

* in 5 mm steps

20261109

Guide rail fastenings (principle)

V Installation with one bracket

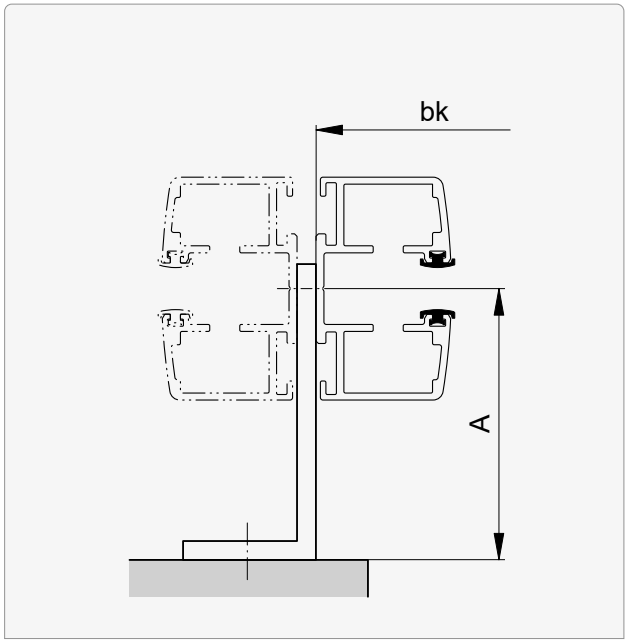

The blind on the right uses the fastening for the blind on the left.

Transverse and holding force per fastening point at least 1000 N.

Guide extension and facet

Extension and facet

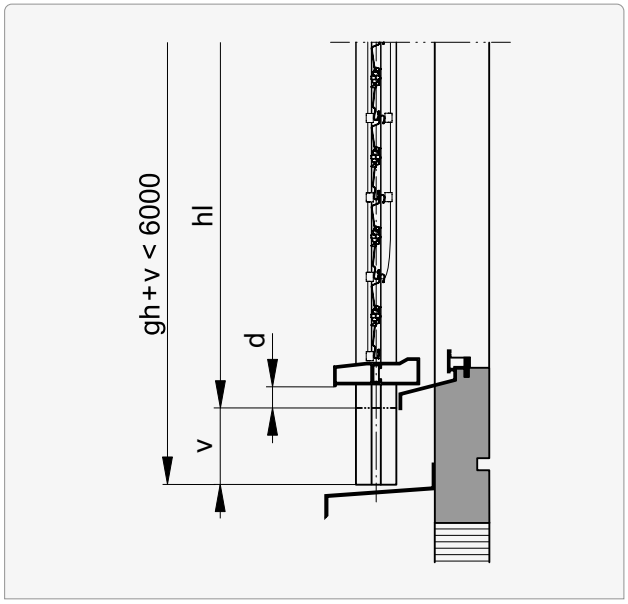

v
0 ... 3000

Facet

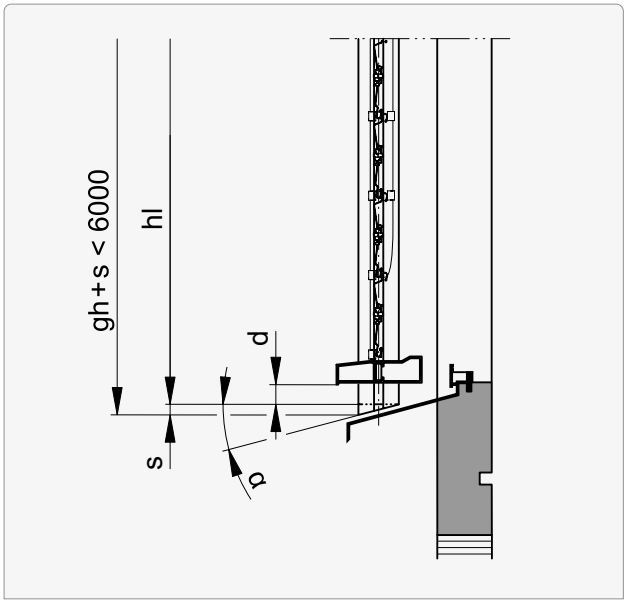

α
5 ... 60°

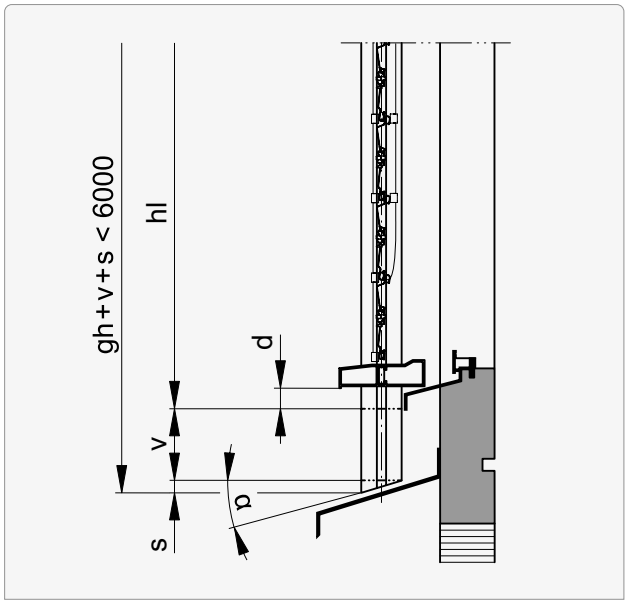

v	α
0 ... 3000	5 ... 60°

Angling at the guides

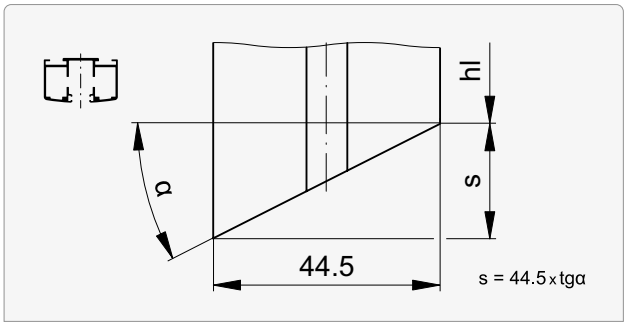

α	s	α	s	α	s	α	s	α	s	α	s
5	4	**15**	12	**25**	21	**35**	31	**45**	45	**55**	64
6	5	**16**	13	**26**	22	**36**	32	**46**	46	**56**	66
7	5	**17**	14	**27**	23	**37**	34	**47**	48	**57**	69
8	6	**18**	14	**28**	24	**38**	35	**48**	49	**58**	71
9	7	**19**	15	**29**	25	**39**	36	**49**	51	**59**	74
10	8	**20**	16	**30**	26	**40**	37	**50**	53	**60**	77
11	9	**21**	17	**31**	27	**41**	39	**51**	55		
12	9	**22**	18	**32**	28	**42**	40	**52**	57		
13	10	**23**	19	**33**	29	**43**	41	**53**	59		
14	11	**24**	20	**34**	30	**44**	43	**54**	61		

Guide rail cut-outs in windowsill area

Rear cut-out | without / with extension

Without extension

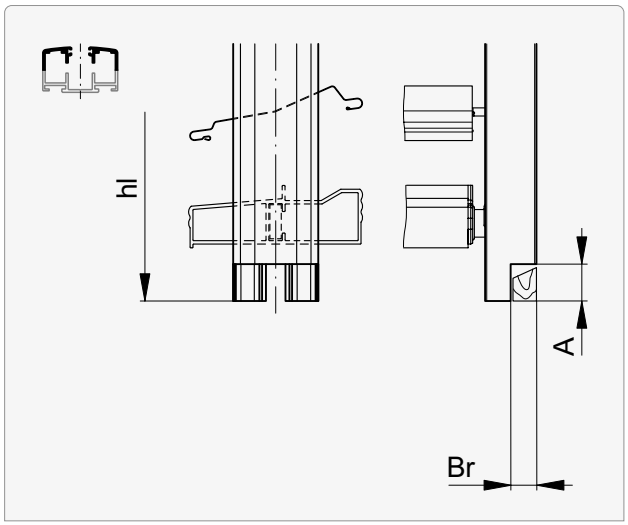

A	Br
≤ d - dimension	2 ... 4
	6 ... 15

Extension | v ≤ A

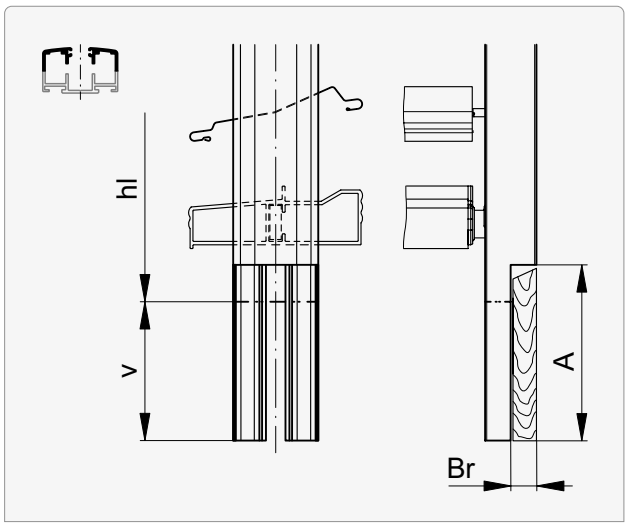

A	Br
≤ d - dimension	2 ... 4
	6 ... 15

Extension | v > A

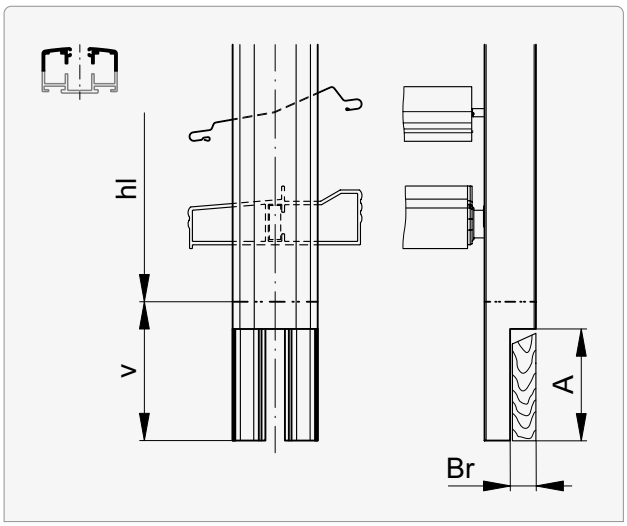

A	Br
≤ d - dimension	2 ... 4
	6 ... 15

v Guide rail extension: 0 ... 3000

d - dimension **42**

Guide rail cut-outs in windowsill area

Rear cut-out | with facet / with extension and facet

Facet

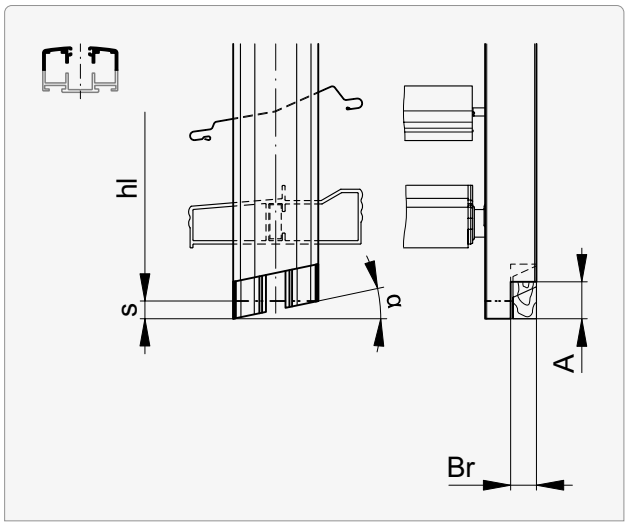

A	Br
≤ d - dimension (5 ... 35)	2 ... 4
	6 ... 15

Extension and facet | (v + s) ≤ A

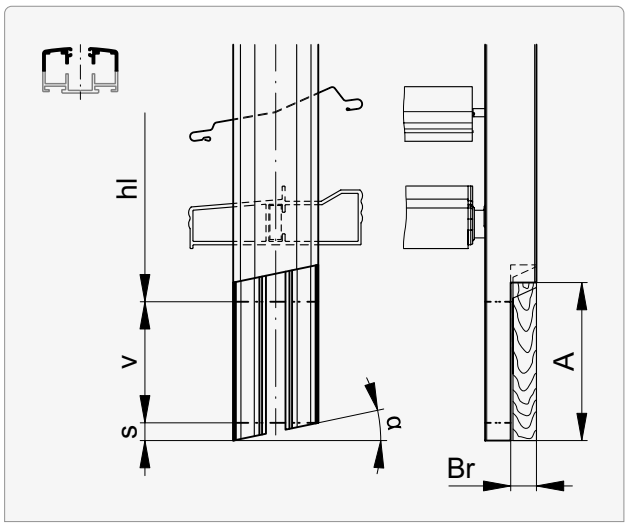

A	Br
≤ d - dimension (5 ... 35)	2 ... 4
	6 ... 15

Extension and facet | (v + s) > A

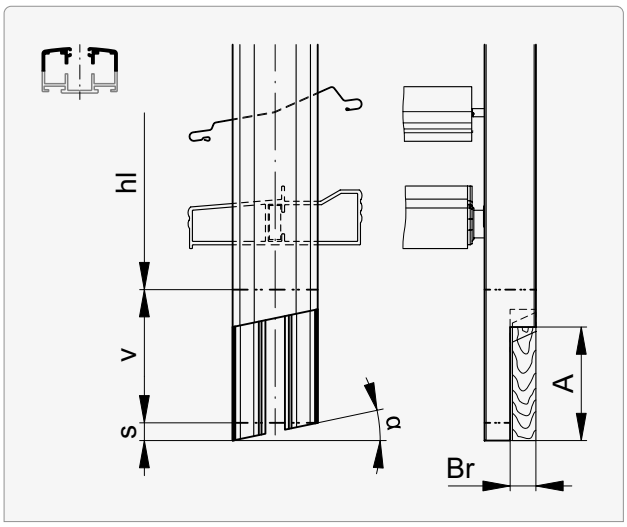

A	Br
≤ d - dimension (5 ... 35)	2 ... 4
	6 ... 15

v Guide rail extension: 0 ... 3000

d - dimension **42**

Guide rail cut-outs in windowsill area

Inner cut-out | without / with extension

Without extension

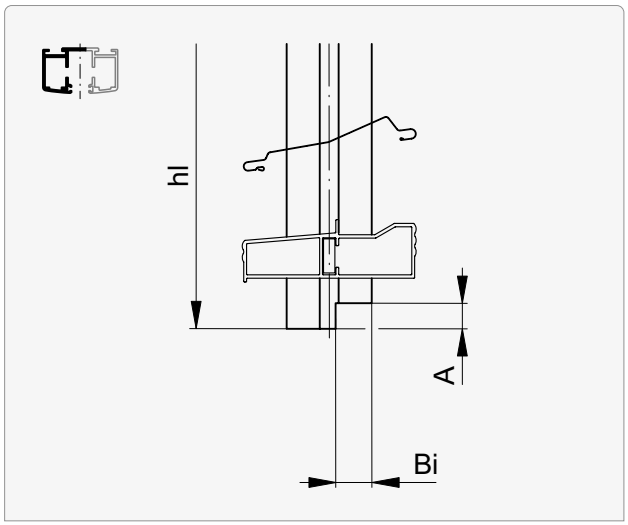

A	Bi
≤ d - dimension	0 ... 13
	19

Extension | v ≤ A

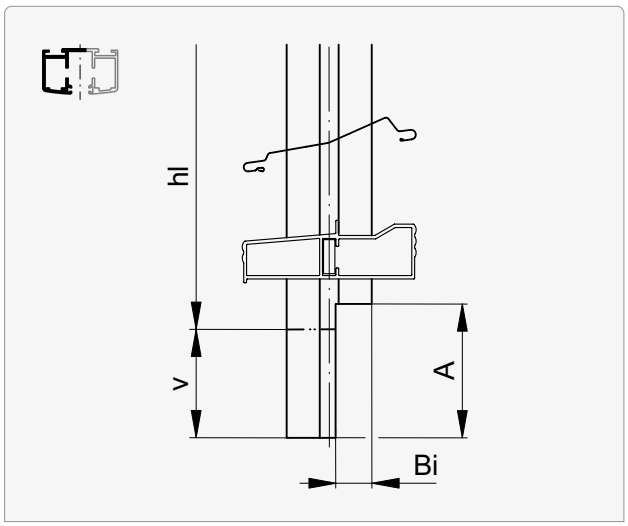

A	Bi
≤ d - dimension	0 ... 13
	19

Extension | v > A

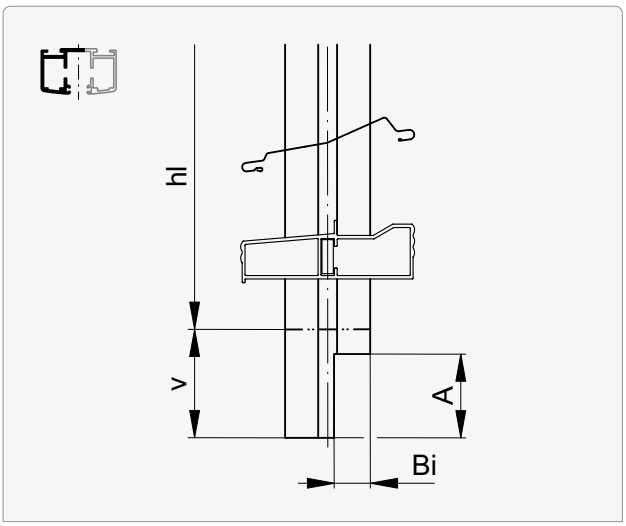

A	Bi
≤ d - dimension	0 ... 13
	19

v Guide rail extension: 0 ... 3000

d - dimension **42**

Guide rail cut-outs in windowsill area

Inner cut-out | with facet / with extension and facet

Facet

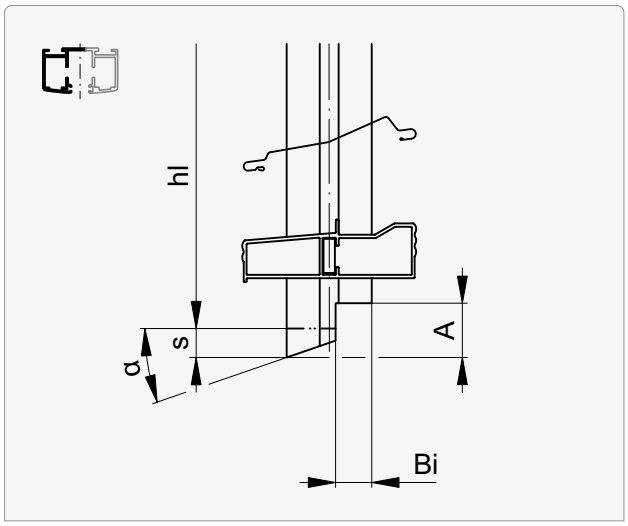

A	Bi
≤ d - dimension	0 ... 13
	19

Extension and facet | (v + s) ≤ A

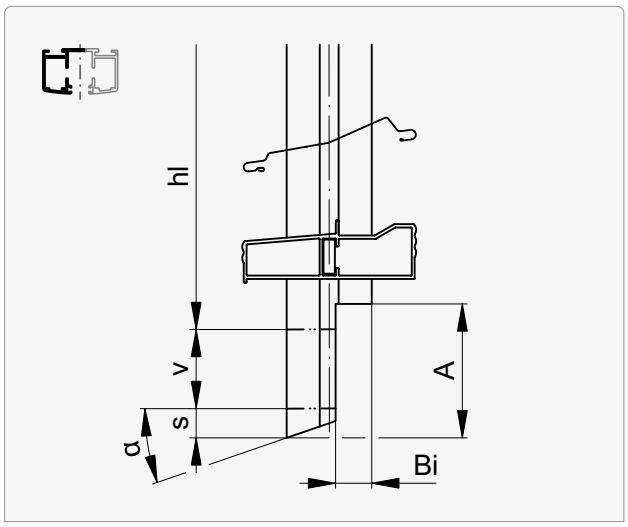

A	Bi
≤ d - dimension	0 ... 13
	19

Extension and facet | (v + s) > A

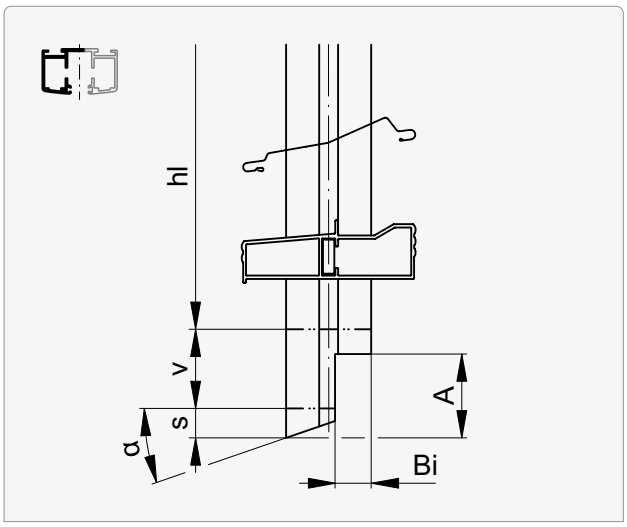

A	Bi
≤ d - dimension	0 ... 13
	19

v Guide rail extension: 0 ... 3000

d - dimension **42**

Installation window

Without extension

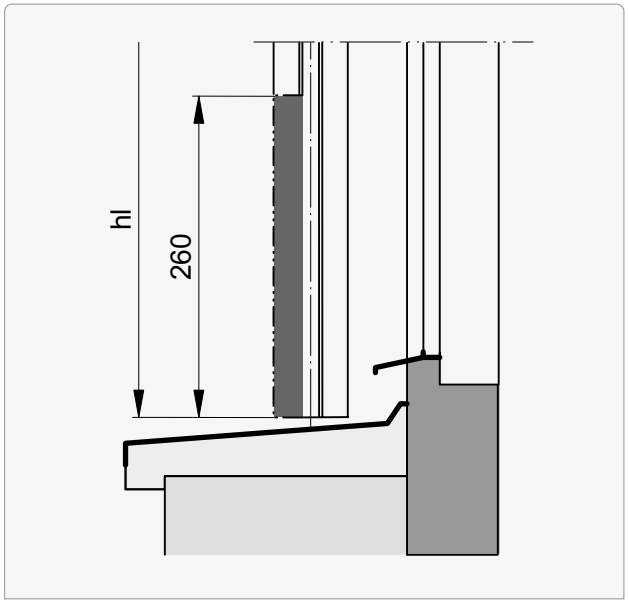

With extension

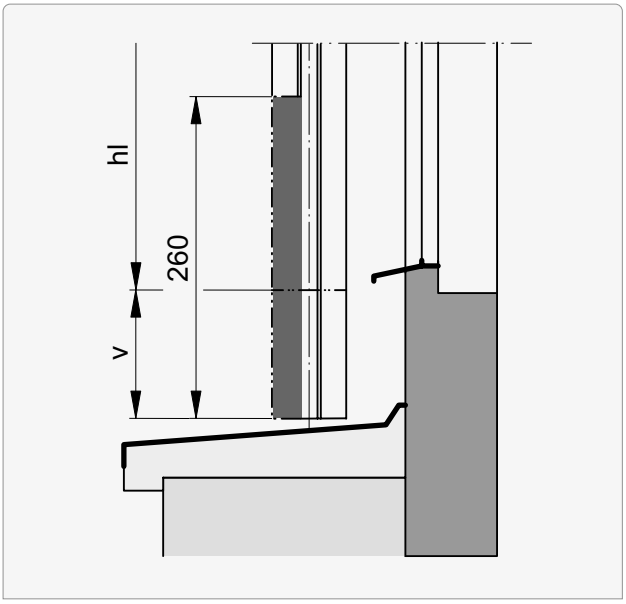

With extension and facet

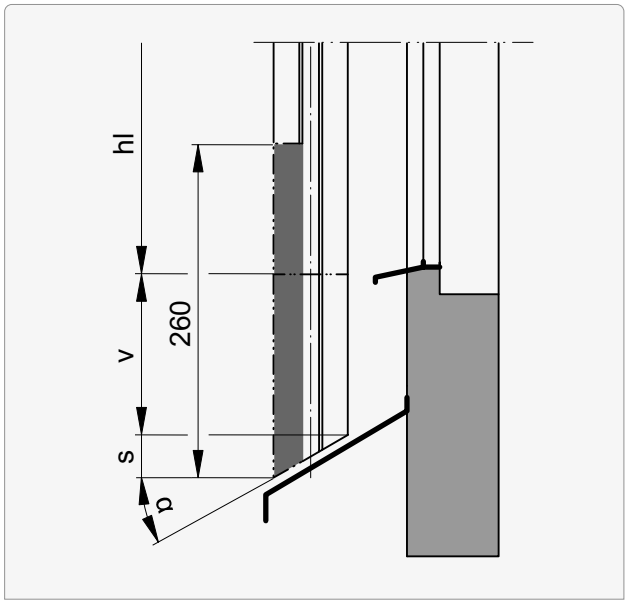

for (v + s) ≤ 80	for (v + s) > 80
always for bottommost	two-part guide rails instead of installation window (hl > 1135) always with continuous beading.

s Faceting (guide rail width x tgα)

v Guide rail extension: max. 1000

Fastening points

Transverse and holding force per fastening point at least 700 N.

Without guide rail extension

hl	**AS** min.
≤ 1500	2
1501 ... 2700	3
2701 ... 3900	4
3901 ... 5100	5
> 5100	6

Regular

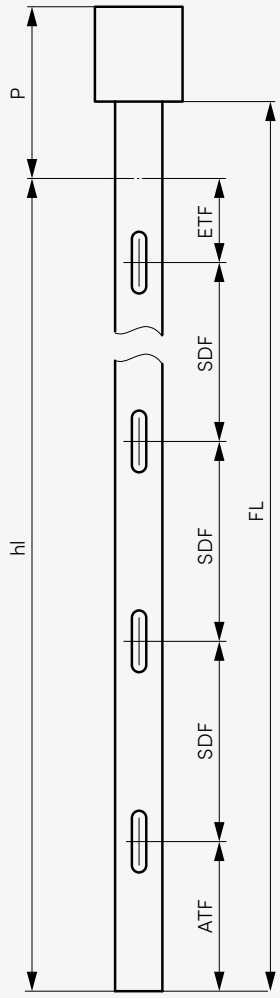

Irregular

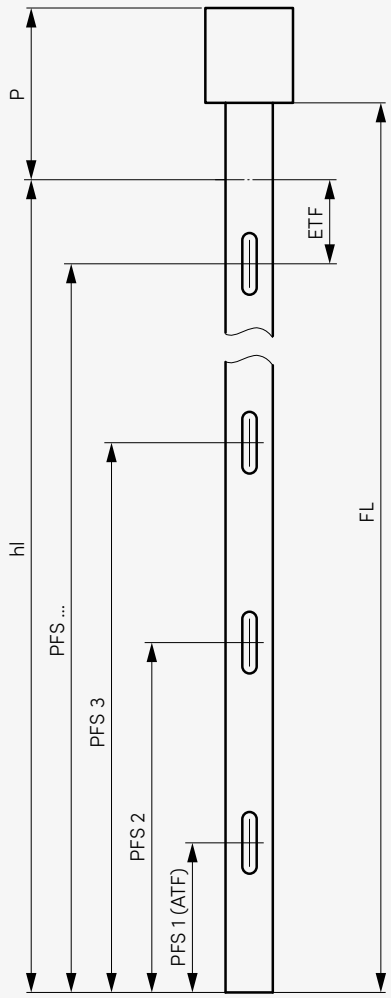

AS Number of slits
ATF Initial spacing guide rail (standard 200)
ETF Endspacing guide rail (standard 100)
FL Guide length
PFS Slot position
SDF Slot distance guide rail: 100 ... 1200

Bottommost fastening point is also the **fastening point for installation window**.

Guide rail fastenings **51**
Installation window **62**

Fastening points

Transverse and holding force per fastening point at least 700 N.

With guide rail extension

Z	AS min.
≤ 1500	2
1501 ... 2700	3
2701 ... 3900	4
3901 ... 5100	5
> 5100	6

Regular

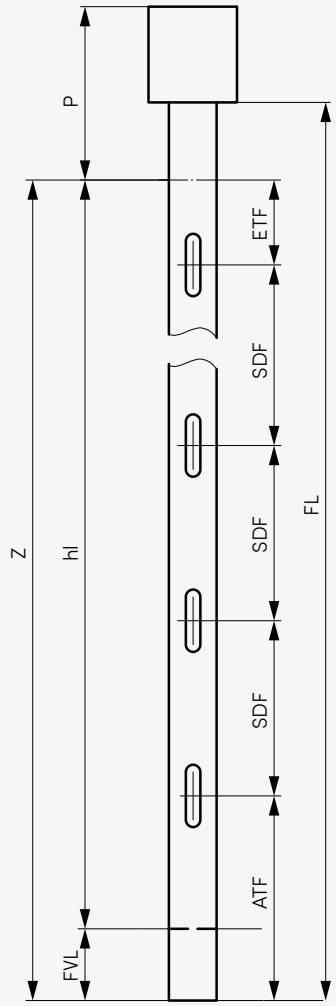

Irregular

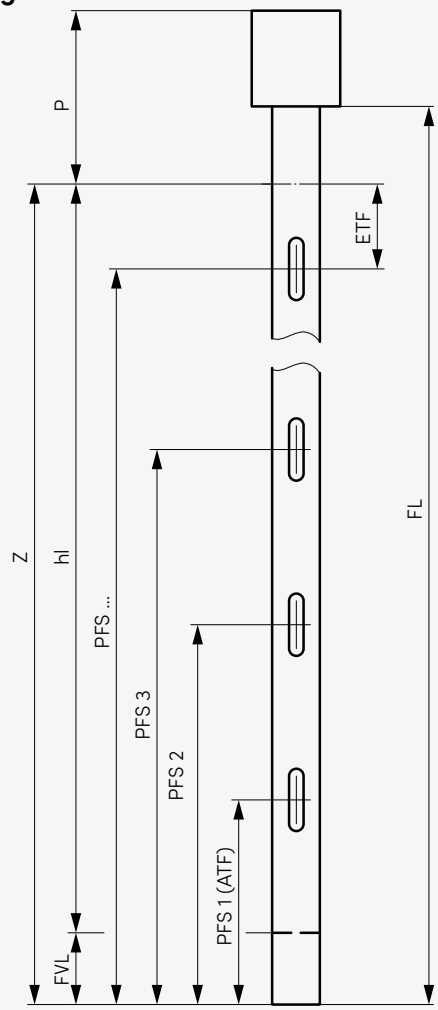

AS Number of slits
ATF Initial spacing guide rail (standard 200)
ETF Endspacing guide rail (standard 100)
FL Guide length
FVL Guide rail extension
PFS Slot position
SDF Slot distance guide rail: 100 ... 1200

Guide extension and facet 57
Guide rail fastenings 51
Installation window 62

Fastening points

Transverse and holding force per fastening point at least 700 N.

Without guide rail extension, with facet

Z	AS min.
≤ 1500	2
1501 ... 2700	3
2701 ... 3900	4
3901 ... 5100	5
> 5100	6

Regular

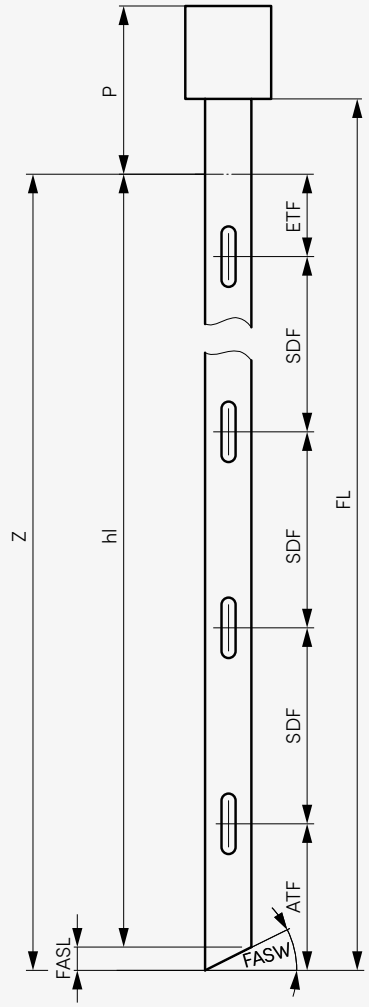

Irregular

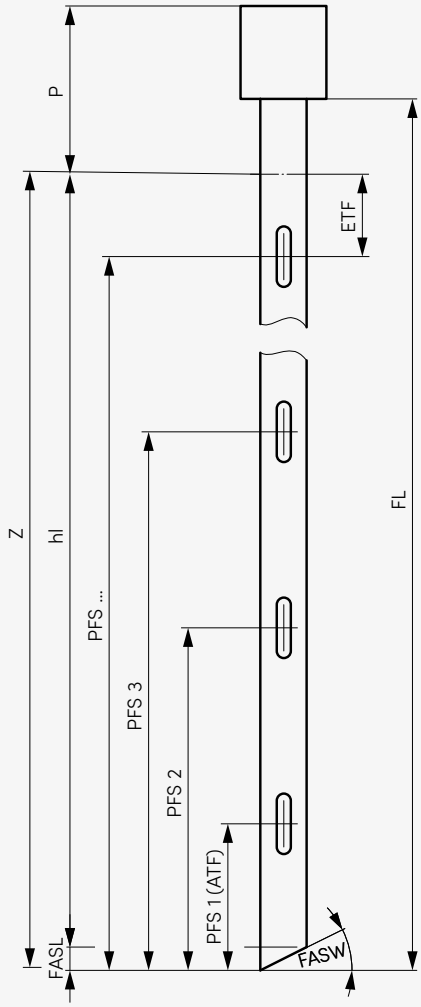

AS Number of slits
ATF Initial spacing guide rail (standard 200)
ETF Endspacing guide rail (standard 100)
FASL Guide rail facet length
FASW Guide rail facet angle
FL Guide length
PFS Slot position
SDF Slot distance guide rail: 100 ... 1200

Guide extension and facet 57
Guide rail fastenings 51
Installation window 62

Fastening points

Transverse and holding force per fastening point at least 700 N.

With guide rail extension and facet

Z	AS min.
≤ 1500	2
1501 ... 2700	3
2701 ... 3900	4
3901 ... 5100	5
> 5100	6

Regular

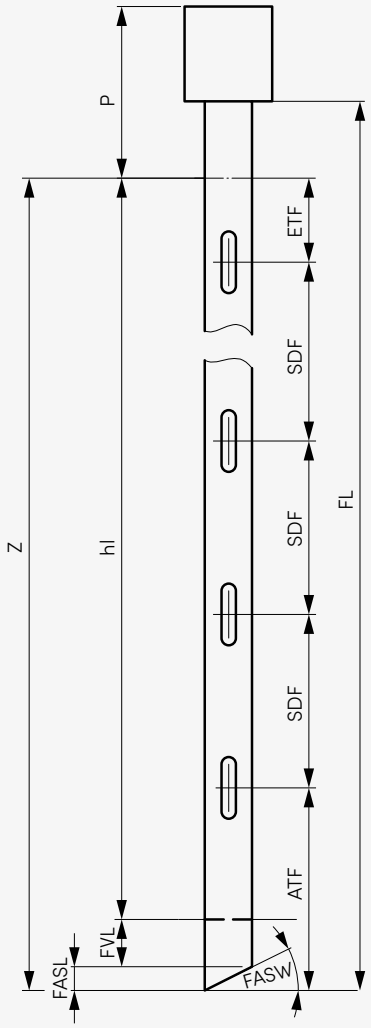

Irregular

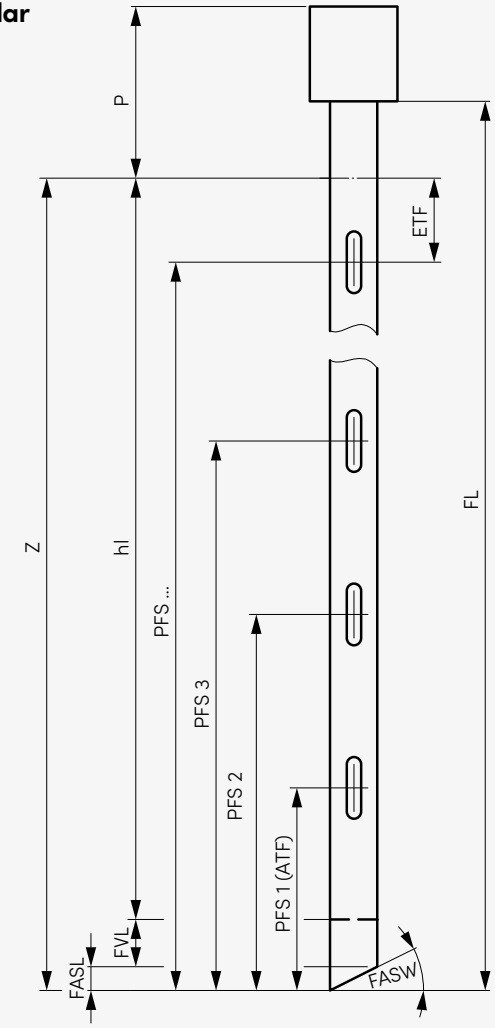

AS Number of slits
ATF Initial spacing guide rail (standard 200)
ETF Endspacing guide rail (standard 100)
FASL Guide rail facet length
FASW Guide rail facet angle

FL Guide length
FVL Guide rail extension
PFS Slot position
SDF Slot distance guide rail: 100 ... 1200

Guide extension and facet 57
Guide rail fastenings 51
Installation window 62

Fastening points

Transverse and holding force per fastening point at least 700 N.

For two-part guide rails

FLUT	for (s+v) ≤ 80 hl*	for (s+v) > 80 s+v	ASOT	hl*
500	≤ 1635	81 ... 250	2	≤ 2582
1000	1636 ... 1885	251 ... 750	3	2583 ... 3782
1250	≥ 1886	≥ 751	4	≥ 3783

* **hl > 1135**: always with continuous beading.

Regular

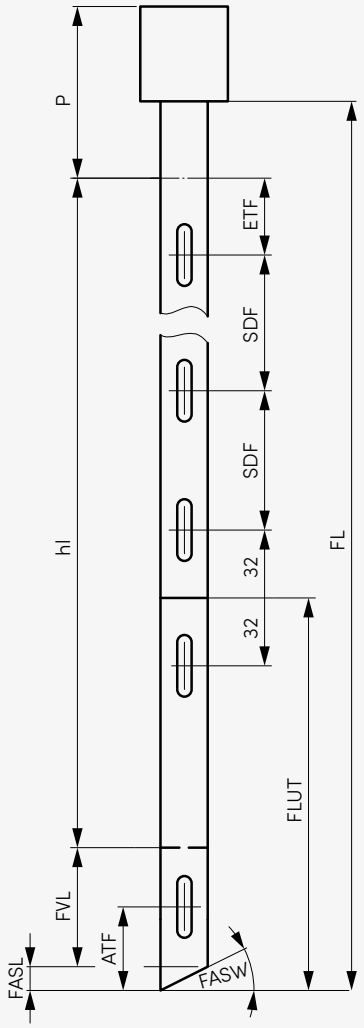

ASOT Number of slots upper part
ATF Initial spacing guide rail (standard 200)
ETF Endspacing guide rail (standard 100)
FASL Guide rail facet length
FASW Guide rail facet angle
FL Guide length
FLUT Guide lenght bottom part
FVL Guide rail extension
SDF Slot distance guide rail: 100 ... 1200

Guide extension and facet 57
Guide rail fastenings 51
Installation window 62

Connected systems

System width

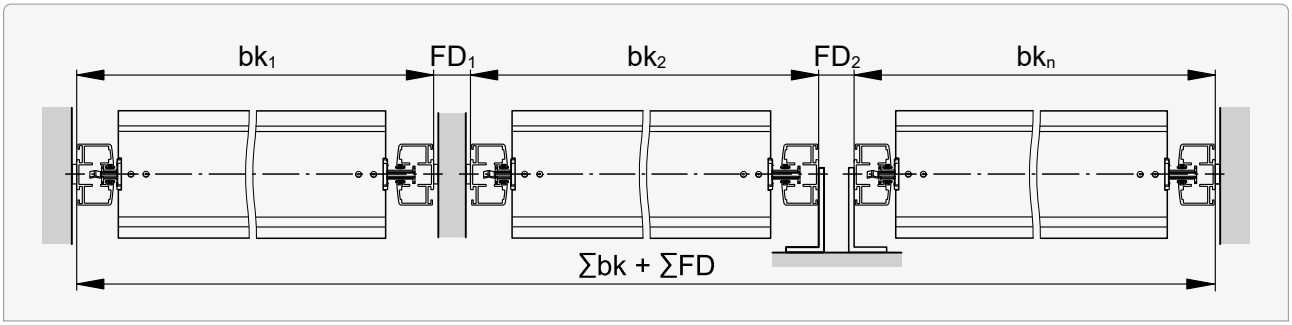

Distance between guides FD

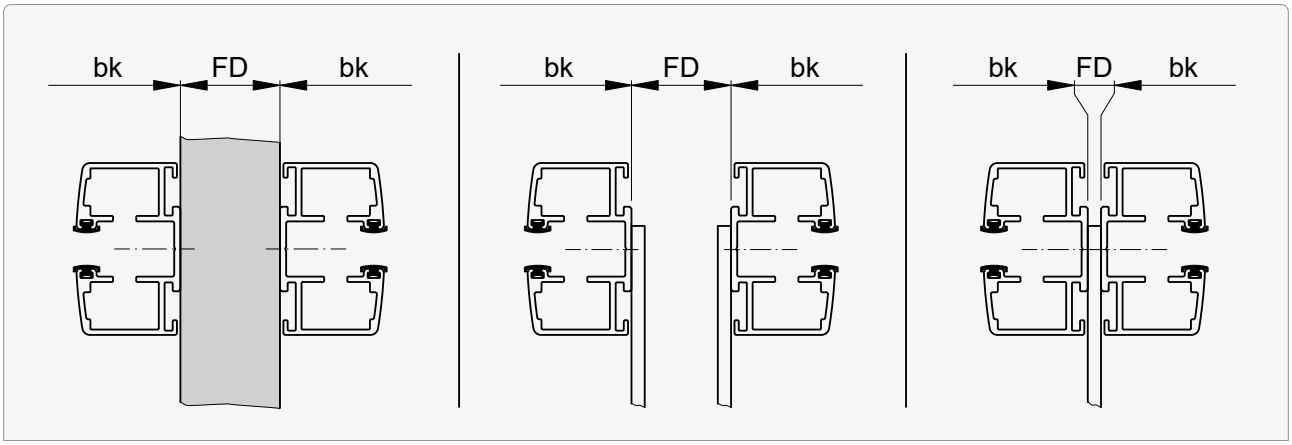

FD min.	FD max.
5	1000

Opening for connected blinds 69

Connected systems

Drive positions connected blinds

Gearbox

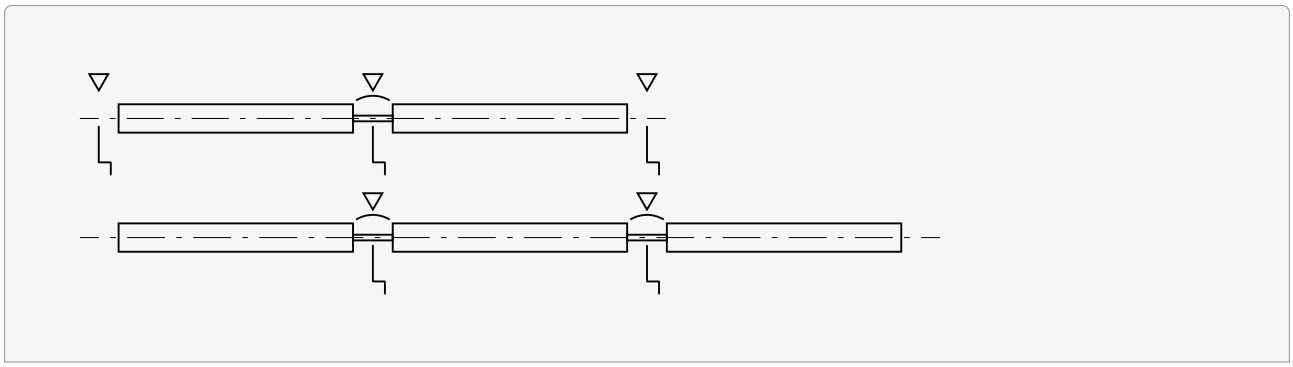

Motor

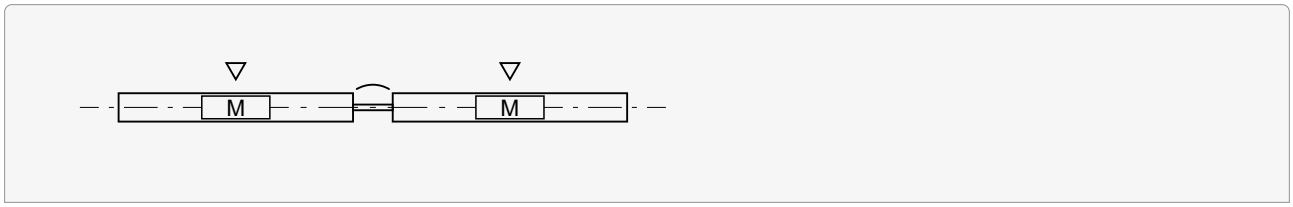

▼ Standard drive position
▽ Possible drive position

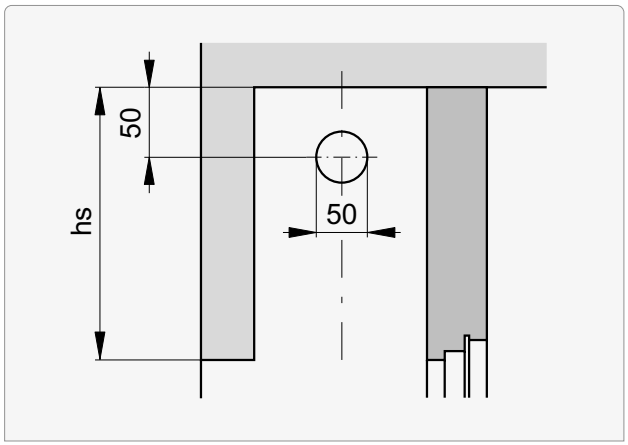

Technical data of motors

Performance characteristics

Type		Limit switch Type	Number of	M [Nm]	n [1/min.]	P [W]	I [A]
Standard							
Elero Comfort							
ECM...	06.01	electronic	2	6	26	115	0.50
	09.01			9		156	0.68
	06.51		3	6		115	0.50
	09.51			9		156	0.68
ECB...	06.01	electronic	2	6	26	115	0.50
	09.01			9		156	0.68
	06.51		3	6		115	0.50
	09.51			9		156	0.68

I Current consumption
M Torque
n Rotational speed
P Power consumption

Lamisol® III

Specifications

Limit dimensions **72**

Mounting situations

Built-in system **73**
Built-in system with cover **74**
Header dimensions | Heights of package **76**
Slat profiles **77**
End rails **77**
Beginning distance | Slot spacing **78**
Housing fastening **79**
Number of box supports **81**
Options **82**
Guide rails **83**
Sections | Details **84**
Sections for crank drive (MBMA) **86**
Vertical connections | Standard motor position **87**

Fastenings

Guide rail installation (principle) **92**
Guide rail fastenings (principle) **94**
Guide extension and facet **102**
Guide rail cut-outs in windowsill area **105**
Guide rail end for suspended guide rails **107**
Installation window **108**
Fastening points **109**

Drive

Connected systems **113**
Technical data of motors **115**

Limit dimensions

Single blind

Operation	Width min. (bk)	Width[1] max. (bk)	Height min. (hl)	Height max. (hl)	Surface[2] max. [m²]
Crank drive	510* 530[5,*]	4500	400	4300	10
Motor drive	590				

Connected systems

Operation	Width[1] max. (bk)		Blinds max.	Blinds per system	Surface[2] max. [m²]
Crank drive[3]	510* 570[5,*]	10000	4	2 ... 4	10
Motor drive[4]	590			2	16
				3 ... 4	24

[1] For buildings and high-rise structures, which are exposed to high winds, this maximum value should be decreased as required. Also see wind classes data sheet.

[2] If crank drive is in slat area: maximum surface area and crank position available on request.

[3] A max. of 2 blinds may be connected on each side of the gearbox.

[4] For 3 or 4 blinds, the motor should be positioned in the center.

[5] Lamisol® III Fix

* with MBMA– on request

Definitions of dimensions 327

Built-in system

Vertical section: Guide rail conventional

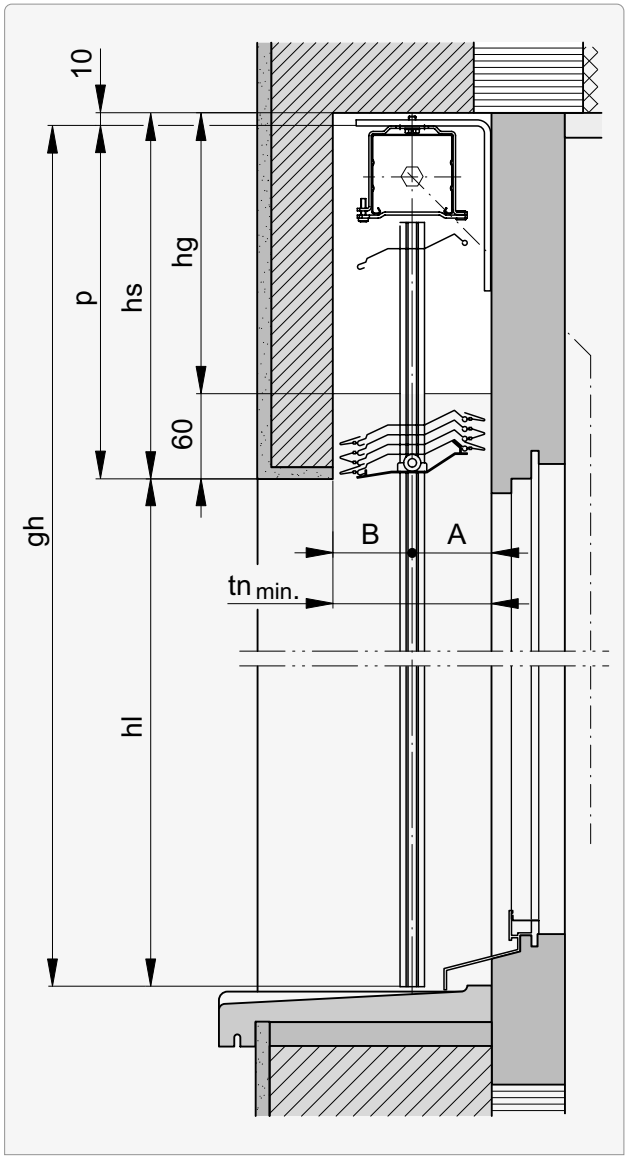

Vertical section: Guide rail Fix-L

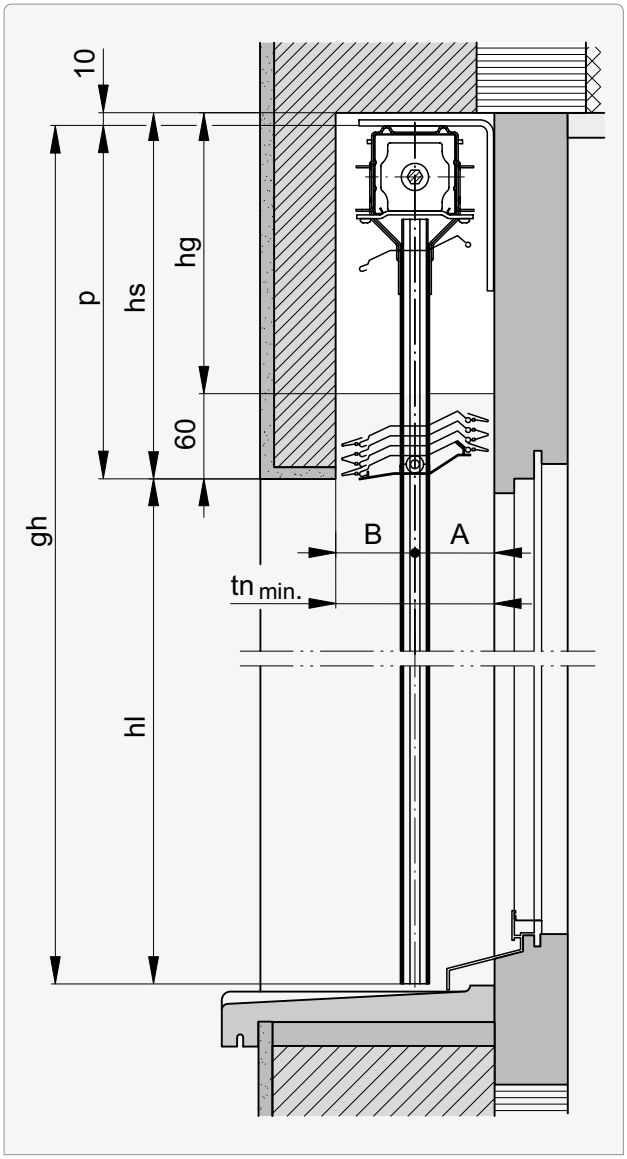

Horizontal section: Guide rail conventional

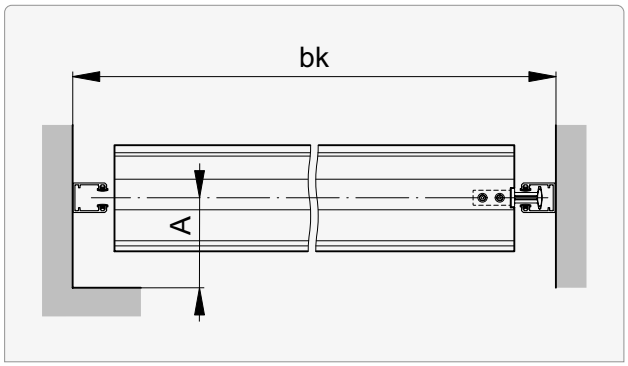

Horizontal section: Guide rail Fix-L

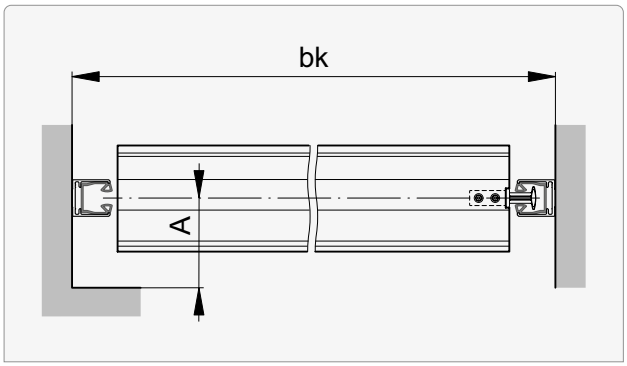

Sections | Details **84**

Values for **A**, **B** and **tn** **76**

Built-in system

Vertical section: Guide rail Fix

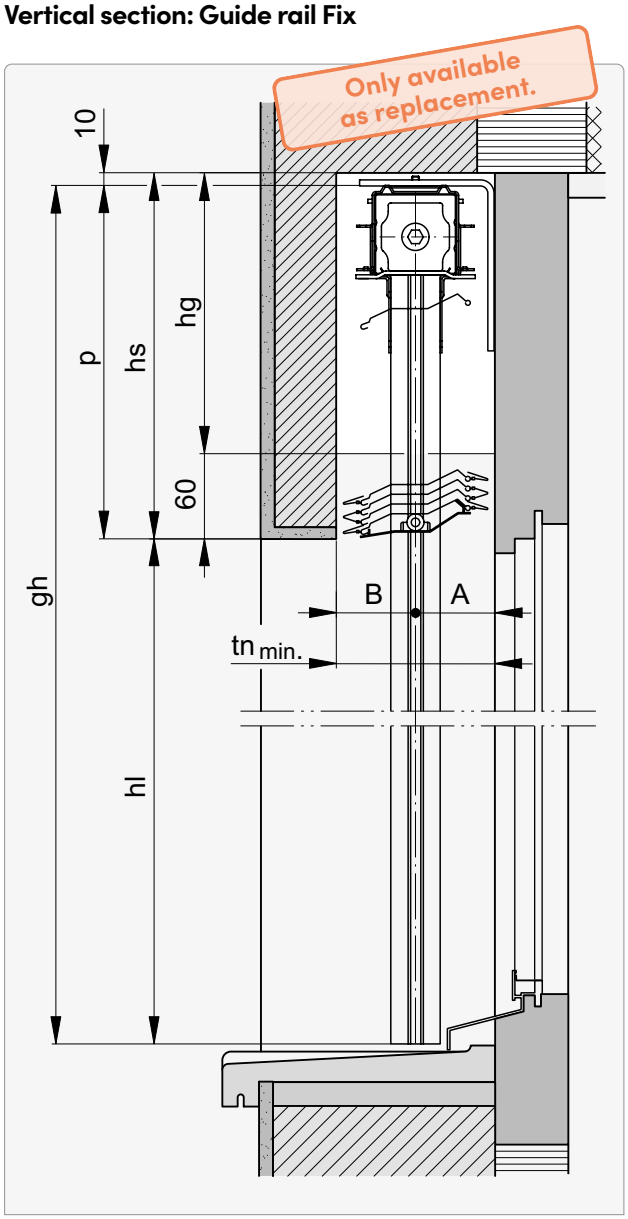

Horizontal section: Guide rail Fix

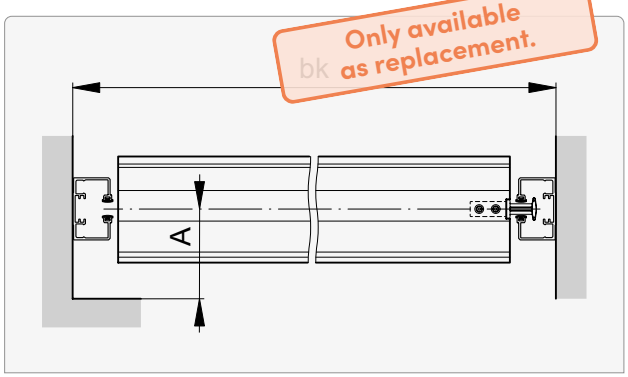

Built-in system with cover

Vertical section: Guide rail conventional

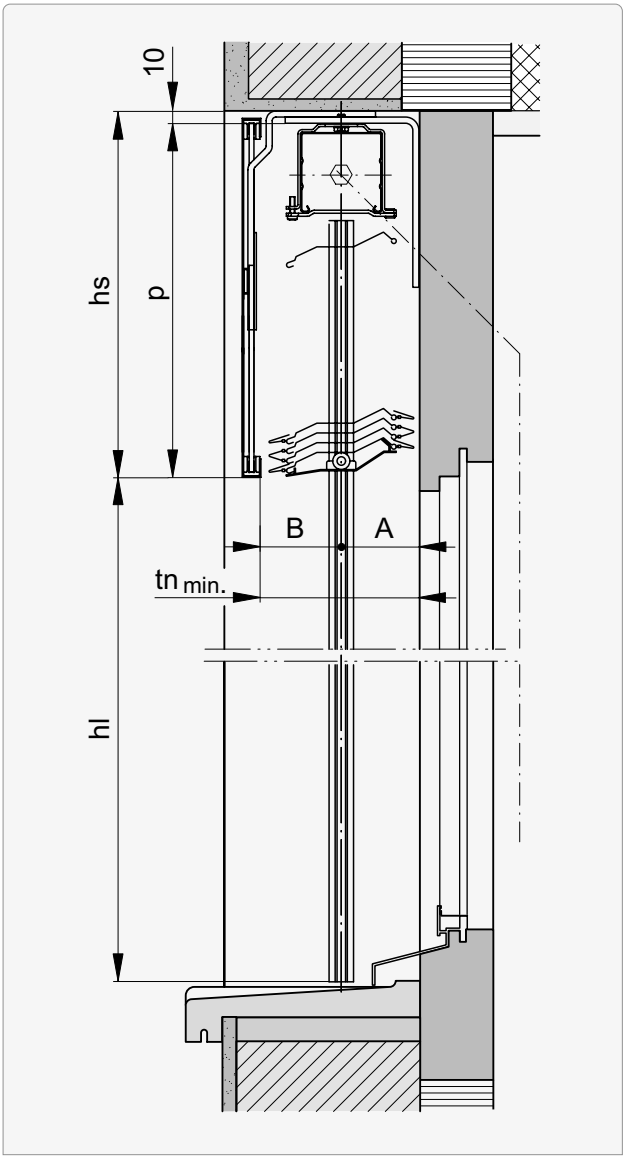

Horizontal section: Guide rail conventional

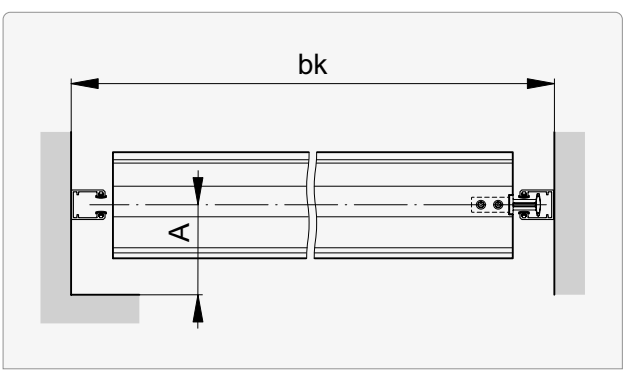

Sections | Details 84

Values for **A**, **B** and **tn** 76

Built-in system with cover

Vertical section: Guide rail Fix-L

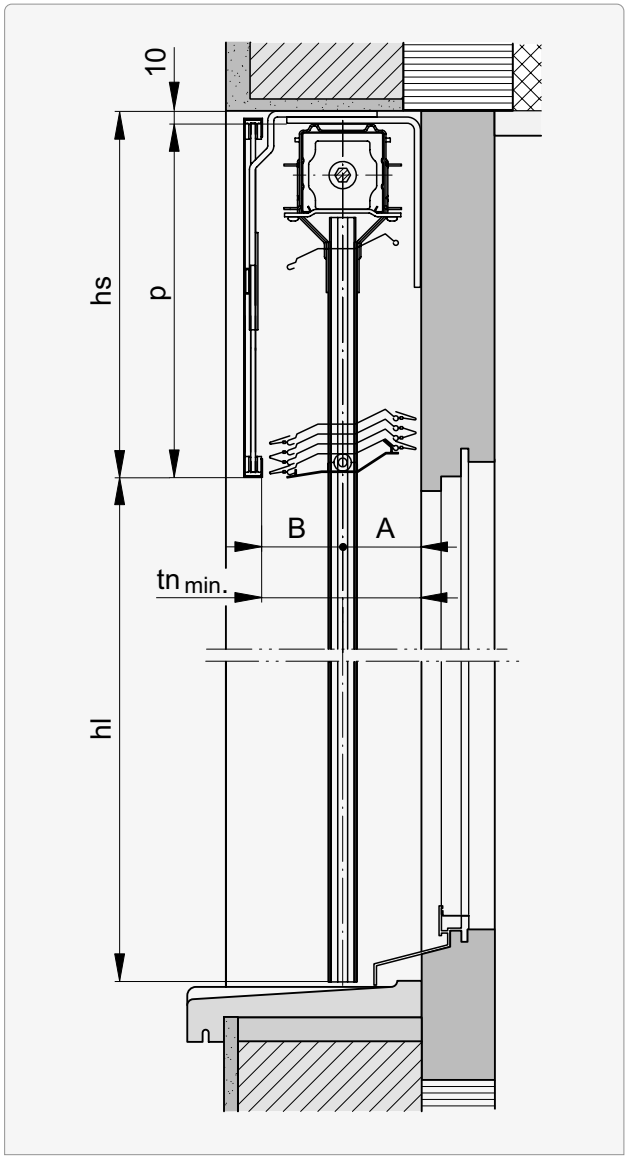

Vertical section: Guide rail Fix

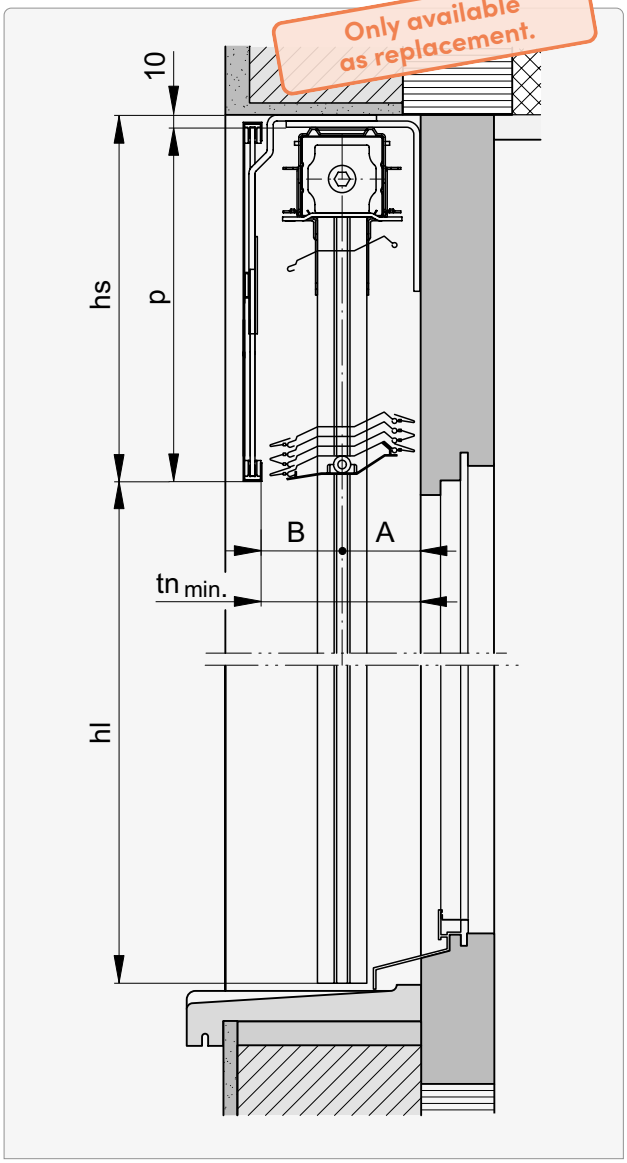

Horizontal section: Guide rail Fix-L

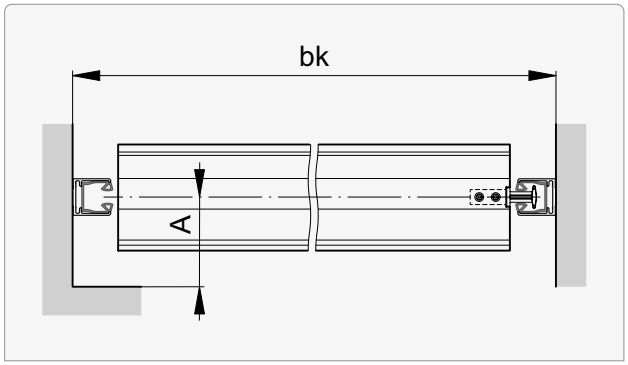

Horizontal section: Guide rail Fix

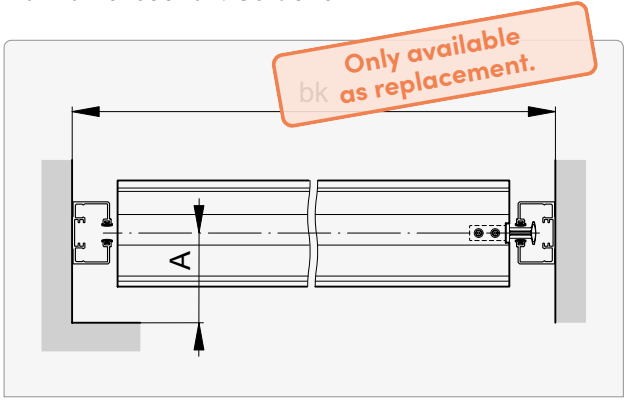

Sections | Details 84

Values for **A**, **B** and **tn** 76

Header dimensions | Heights of package

Lamisol® III 70

hl →		P min.	hs[1]	hl →		P min.	hs[1]	hl →		P min.	hs[1]
1300	195	205	**2850**	295	305	**1800**	215	225	**3100**	285	295
1350	195	205	**2900**	300	310	**1850**	220	230	**3150**	285	295
1400	200	210	**2950**	305	315	**1900**	220	230	**3200**	290	300
1450	205	215	**3000**	305	315	**1950**	220	230	**3250**	295	305
1500	210	220	**3050**	310	320	**2000**	225	235	**3300**	295	305
1550	210	220	**3100**	315	325	**2050**	225	235	**3350**	300	310
1600	210	220	**3150**	320	330	**2100**	230	240	**3400**	305	315
1650	215	225	**3200**	320	330	**2150**	235	245	**3450**	305	315
1700	220	230	**3250**	325	335	**2200**	235	245	**3500**	310	320
1750	225	235	**3300**	325	335	**2250**	240	250	**3550**	315	325
1800	225	235	**3350**	330	340	**2300**	240	250	**3600**	315	325
1850	230	240	**3400**	335	345	**2350**	245	255	**3650**	315	325
1900	235	245	**3450**	335	345	**2400**	250	260	**3700**	320	330
1950	235	245	**3500**	340	350	**2450**	250	260	**3750**	320	330
2000	240	250	**3550**	345	355	**2500**	250	260	**3800**	325	335
2050	240	250	**3600**	350	360	**2550**	255	265	**3850**	330	340
2100	245	255	**3650**	350	360	**2600**	255	265	**3900**	330	340
2150	250	260	**3700**	355	365	**2650**	260	270	**3950**	335	345
2200	255	265	**3750**	355	365	**2700**	265	275	**4000**	340	350
2250	255	265	**3800**	360	370	**2750**	265	275	**4050**	340	350
2300	260	270	**3850**	365	375	**2800**	270	280	**4100**	345	355
2350	265	275	**3900**	370	380	**2850**	275	285	**4150**	345	355
2400	265	275	**3950**	370	380	**2900**	275	285	**4200**	345	355
2450	270	280	**4000**	375	385	**2950**	280	290	**4250**	350	360
2500	275	285	**4050**	380	390	**3000**	280	290	**4300**	355	365
2550	275	285	**4100**	385	395	**3050**	280	290			
2600	280	290	**4150**	385	395						
2650	285	295	**4200**	385	395						
2700	290	300	**4250**	390	400						
2750	290	300	**4300**	395	405						
2800	295	305									

tn min.	A	B
100*	50	50

tn min.	A	B
130*	65	65

[1] With gearbox in slat area: **hs + 20**.
Lamisol® III Reflect: **hs + 5**.

* + possible addition for protruding weatherboard or doorknobs.

Header dimensions are approximate values which may exhibit **negative or positive deviations** depending on the technical circumstances. **A dimensional tolerance of ±5 mm** is observed for the header height.

Slat profiles

Lamisol® III 70

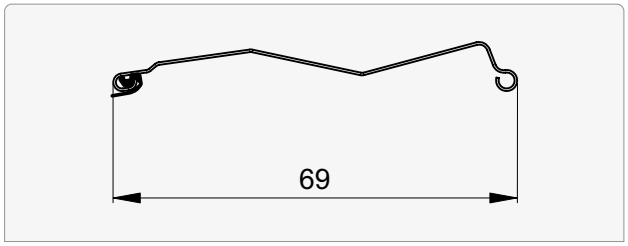

Lamisol® III 90

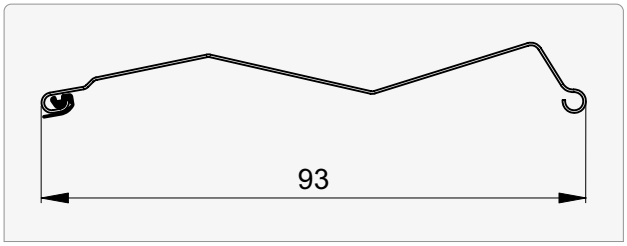

End rails

Lamisol® III 70

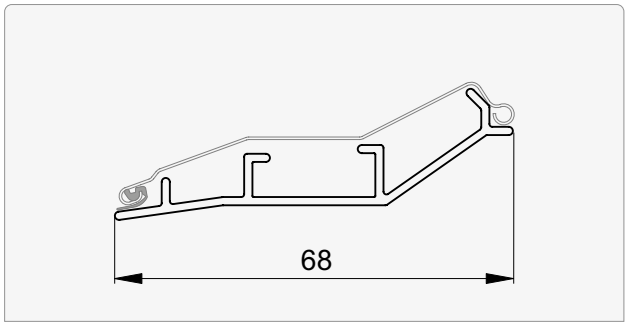

Lamisol® III 90

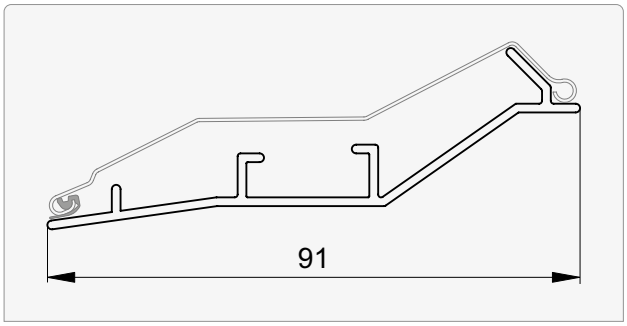

Beginning distance | Slot spacing

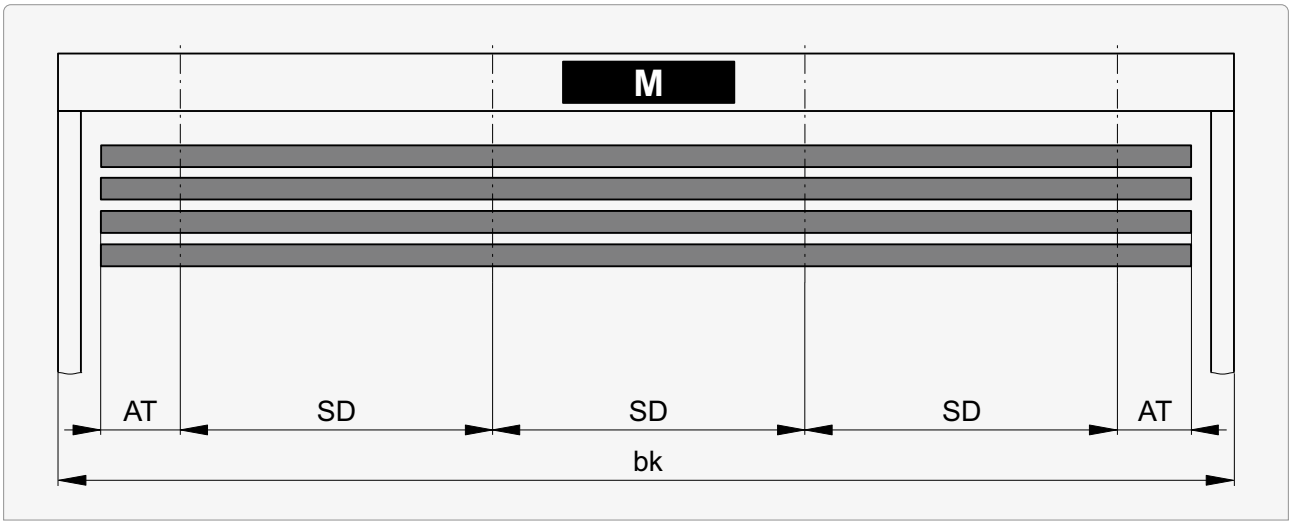

bk	AT min.		SD min.	SD max.
≤610	Conventional	50		
	Fix	60		
	Fix connected	80		
611 ... 1250		100		
>1250		200	350*	1200*
1451 ...1650				
2451 ...2850				
3451 ...4050		250		
>4450				
Special				

* Standard slot spacing machine fabrication

Deviations from the standard are posible when:

Deviation	Correction
MBMA+ < 40	AT
Support loading too high	AS
Slot spacing < 350	AT + AS
With motor	AT + AS

AT Beginning distance
Distance from beginning of slat to centre of bearing

SD Slot spacing
Distance from centre of bearing (slot) to centre of bearing (slot)

Housing fastening

Transverse and holding force per fastening point at least 2200 N.

At top NO

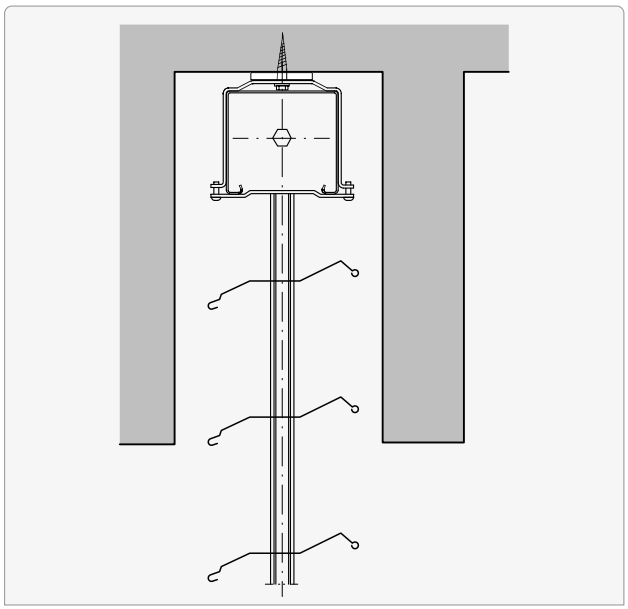

Box support KT

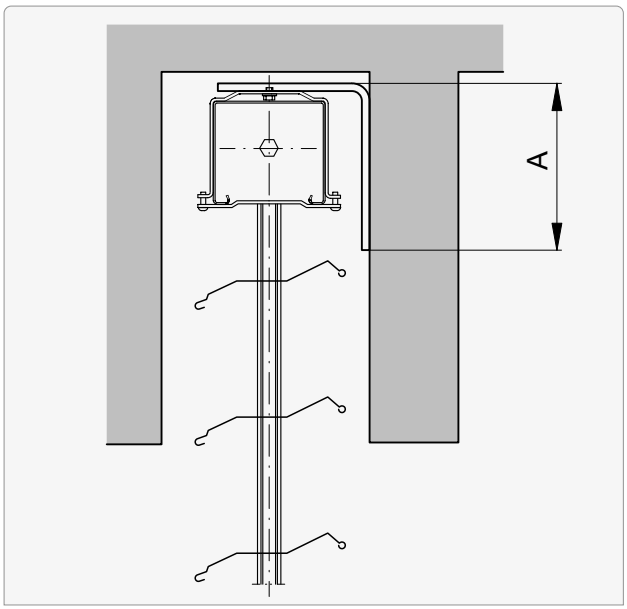

Box support for type KT, for small headers*

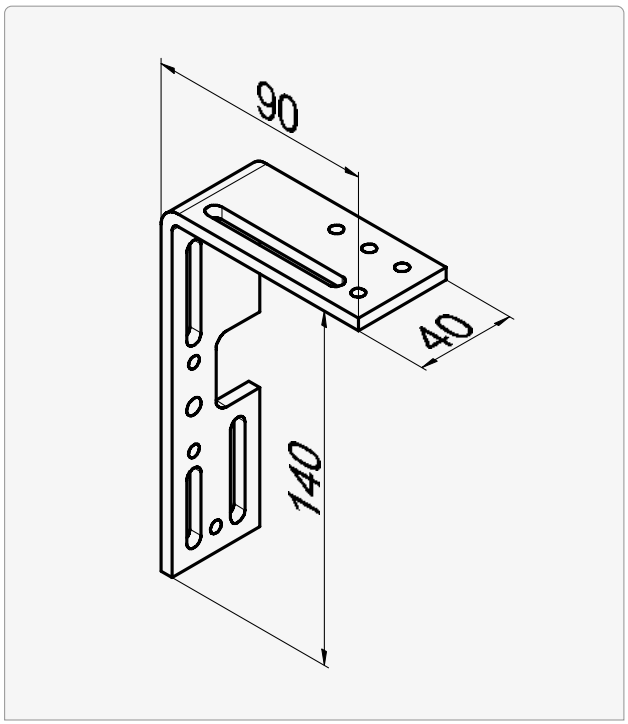

Box support for type KT

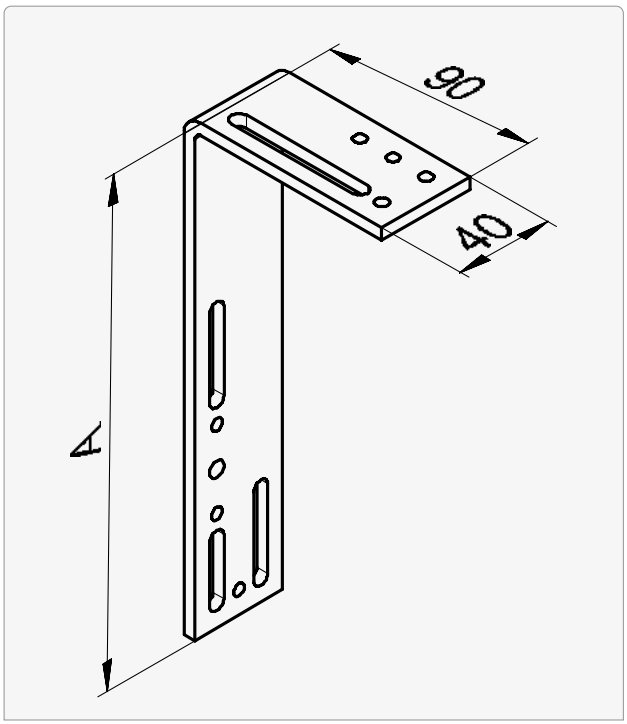

A
140

A
200
260

* Header 100

Housing fastening

Transverse and holding force per fastening point at least 2200 N.

Double box support DR

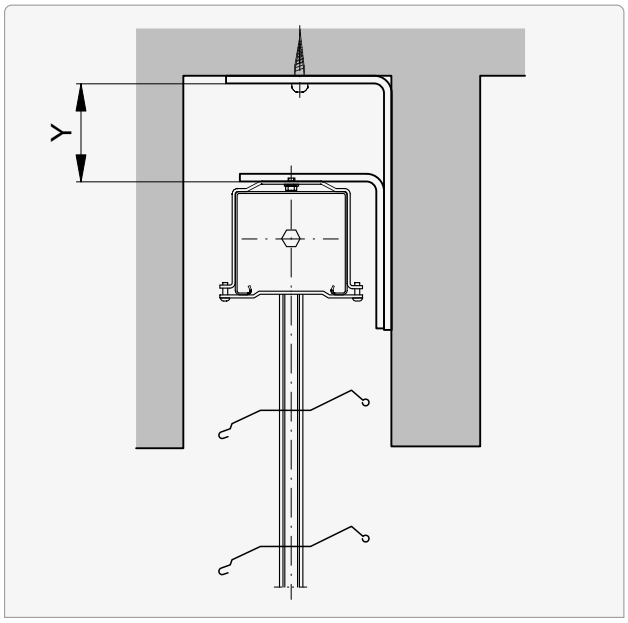

Double box support for type DR

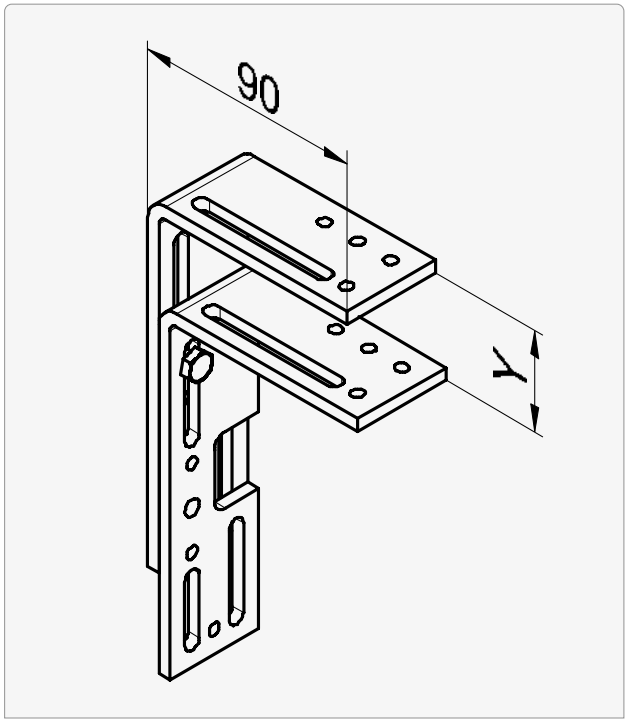

Y
10 ... 75
75 ... 135
135 ... 200

Gallery clip GB

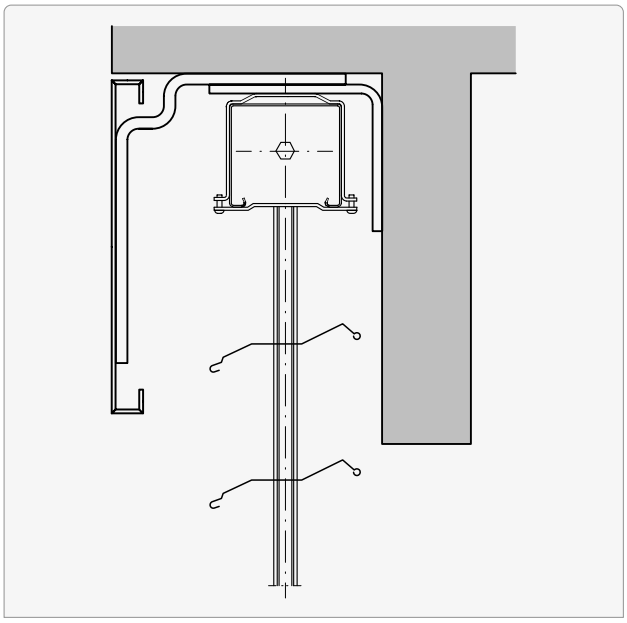

Gallery clip for type GB

See additional documentation at the Griesser Download Center:

Tech Guide "Covers"

Number of box supports

Conventional guides

bk	Quantity
≤ 2500	2
2501 … 3500	3
3501 … 4500	4
> 4500	5

Fix guides | Additional fastenings

bk	Quantity
≤ 2500	0
2501 … 3500	1
> 3500	2

Options

Lamisol® III Reflect

For glare protection at bottom and use of daylight at top.

Lamisol® III 70

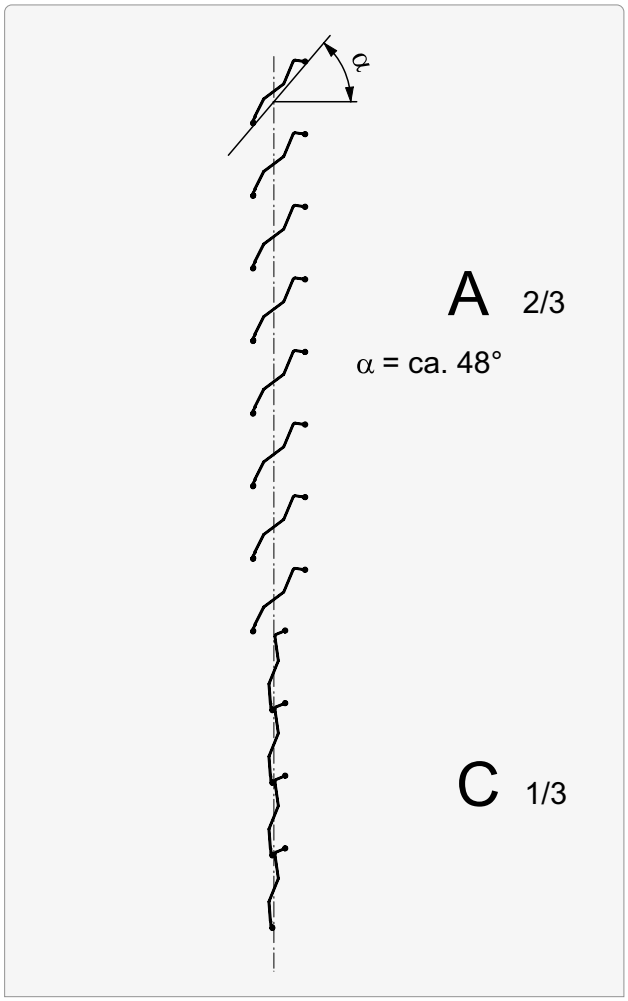

Lamisol® III 90

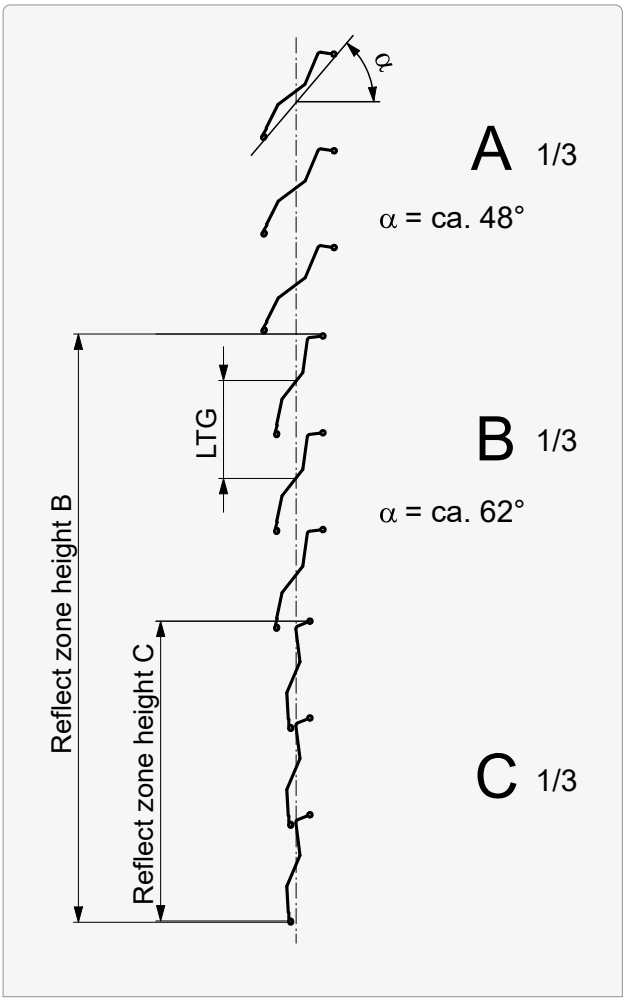

For technical reasons, the Reflect zone **(C + B)** must be two slat spacing units larger than the Reflect zone **C**.

A Use of daylight
B Ability to see outside
C Glare protection
LTG Slat spacing

Guide rails

Type E | Single guide

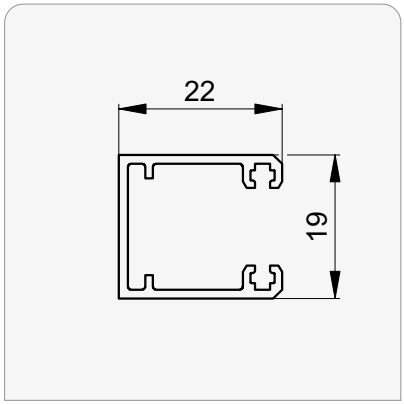

Type L | Fix guide

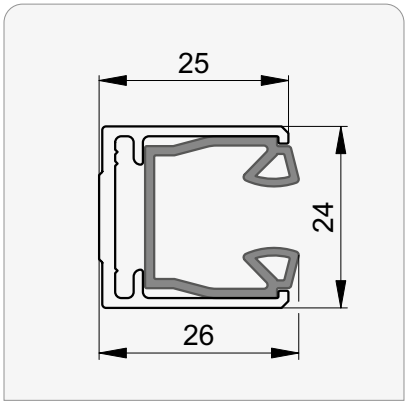

Type F | Fix guide

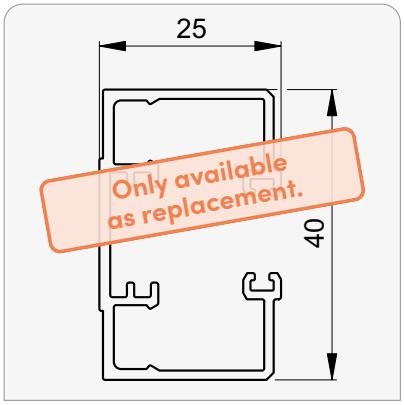

Type D | Double guide

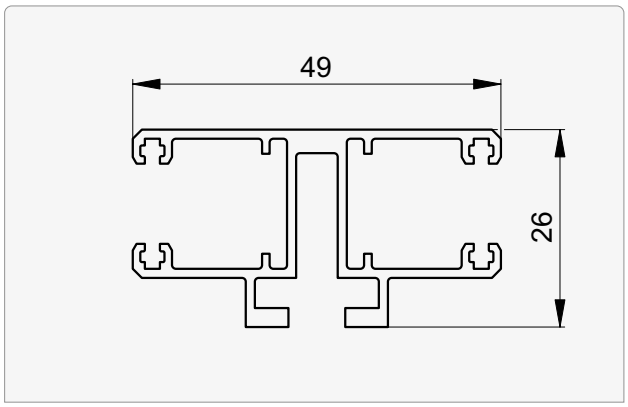

Special guide fastening required

Type C | Single guide

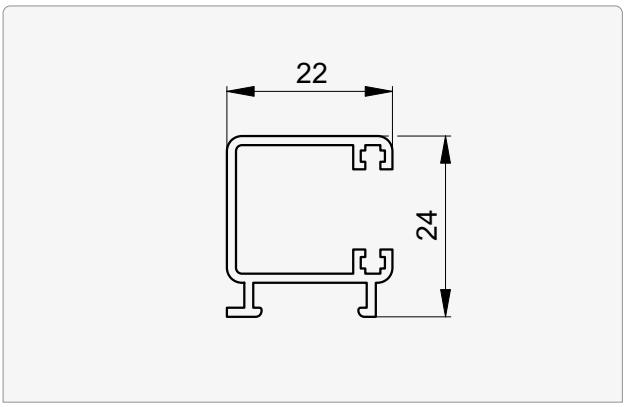

Type R | Curved double guide

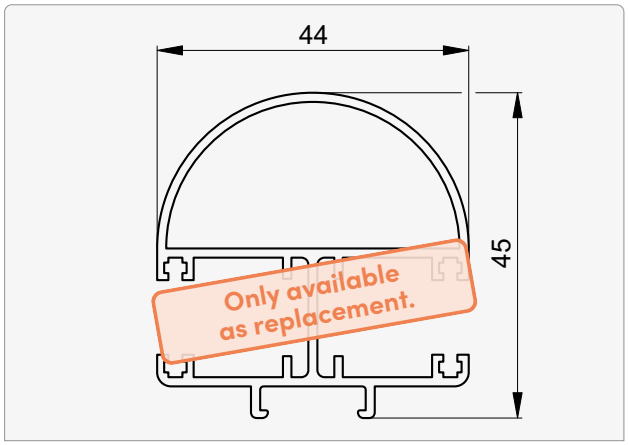

Type T | Double guide

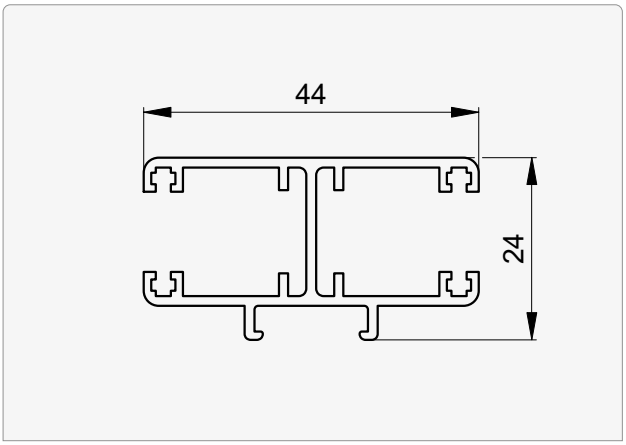

- Distance between guides **FD** **113**
- Fastening points **109**
- Guide extension and facet **102**
- Guide rail fastenings **94**
- Guide rail cut-outs in windowsill area **105**
- Installation window **108**
- Integrated guides **93**

Sections | Details

Horizontal section: Guide rail conventional

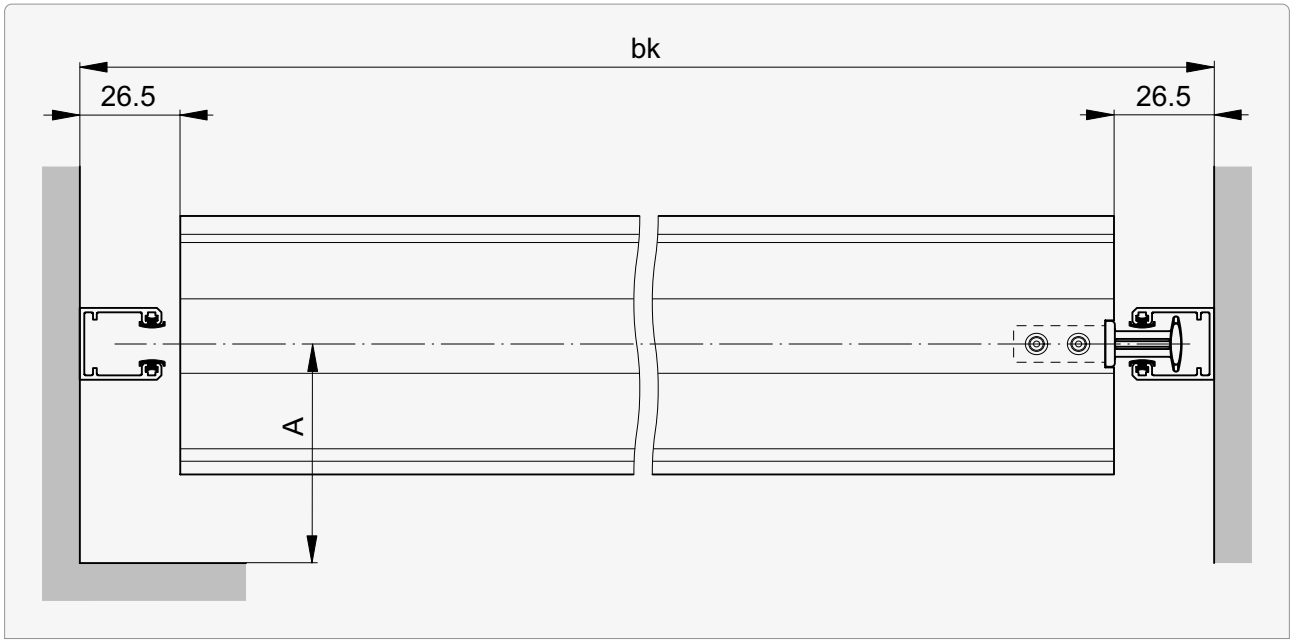

Horizontal section: Guide rail Fix-L

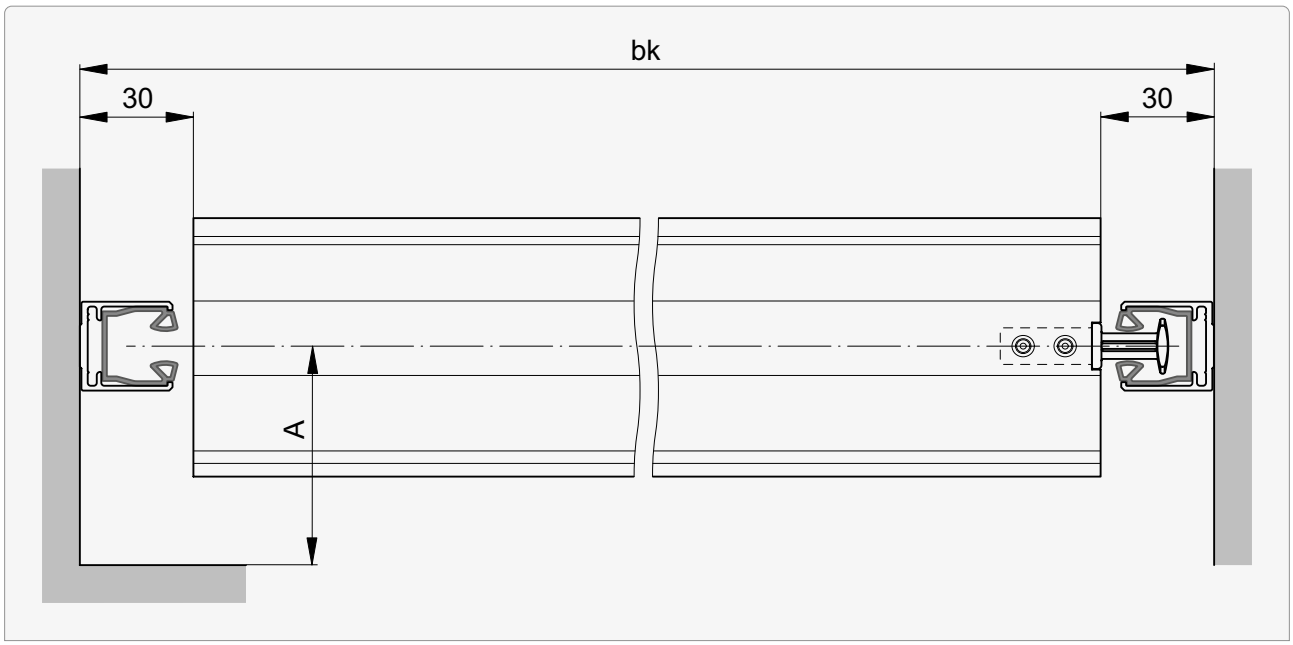

Value for **A** **76**

Sections | Details

Horizontal section: Guide rail Fix

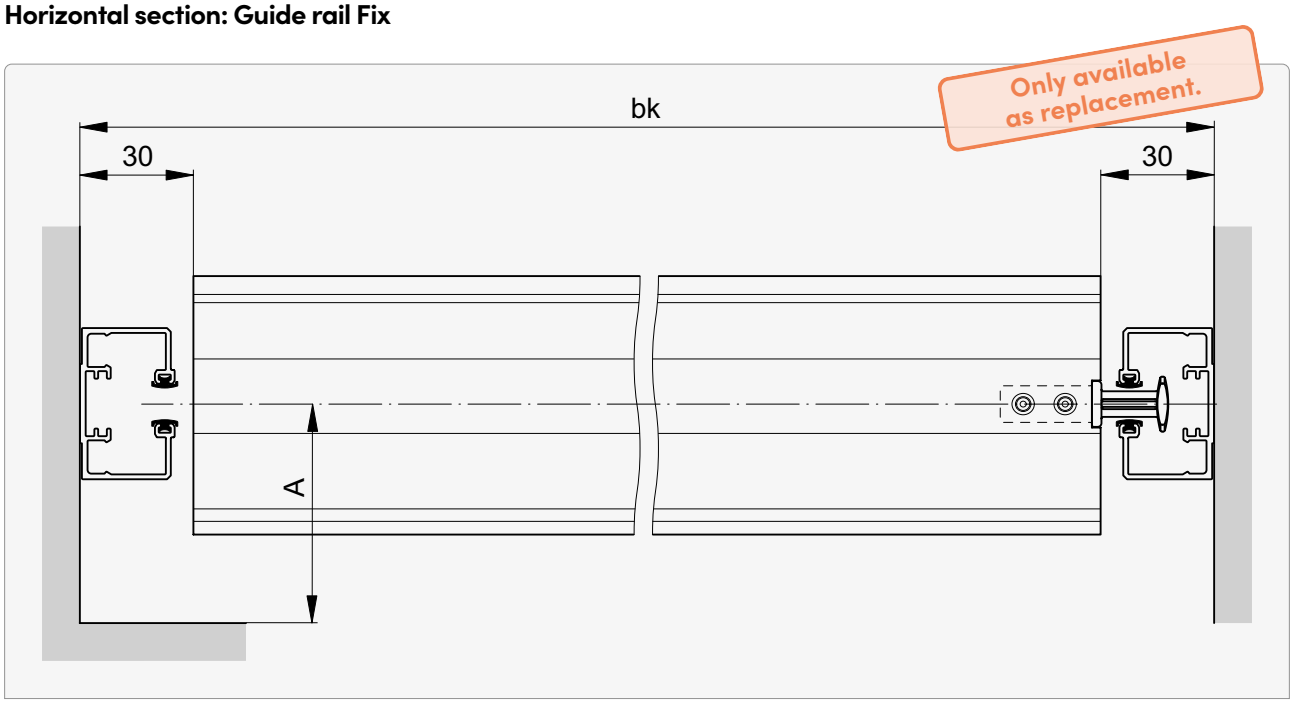

Detail at bottom

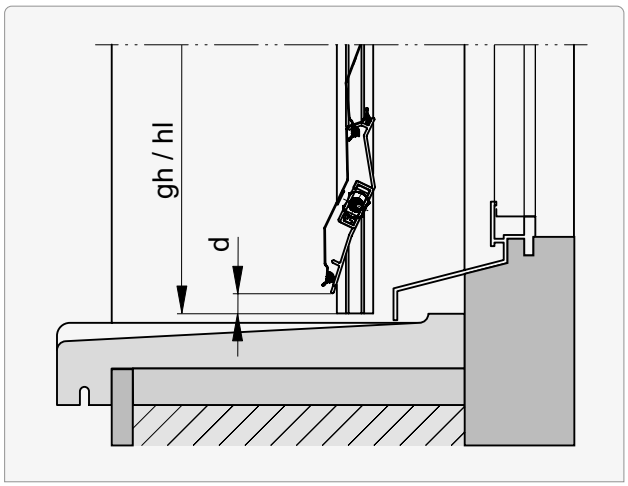

d (d - dimension)
5 +5/–3 (Lamisol® III Reflect: 15 +5/–3)

d - dimension may vary with different blind dimensions.

Value for **A** **76**

Sections for crank drive (MBMA)

outside bk

Conventional

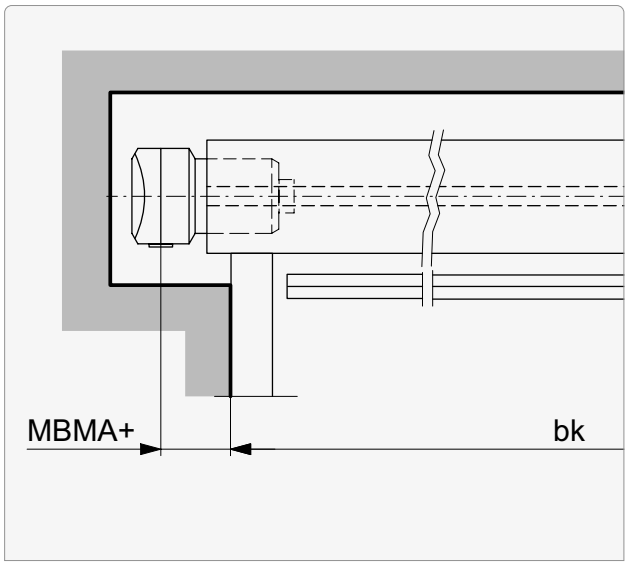

Self-supporting (Fix)

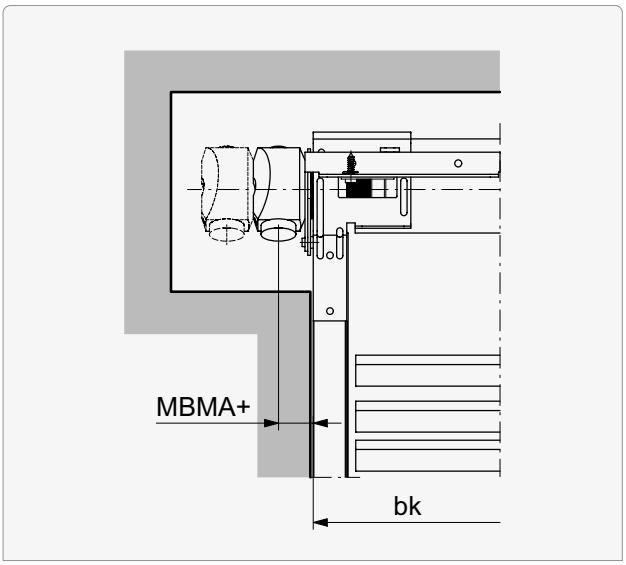

within bk

Conventional

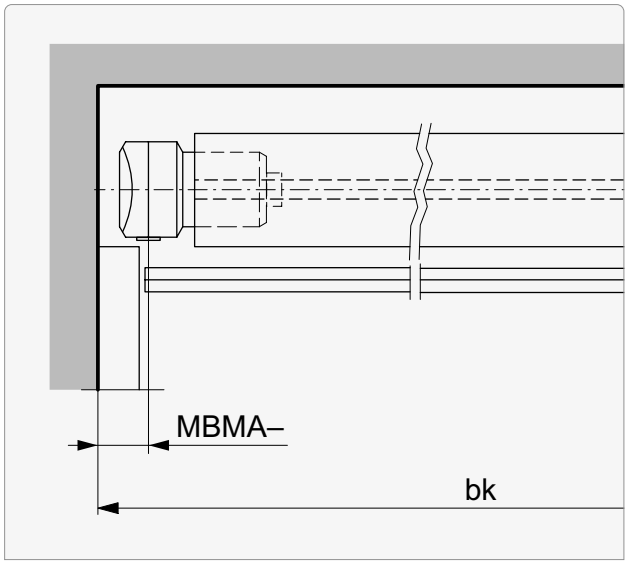

Self-supporting (Fix)

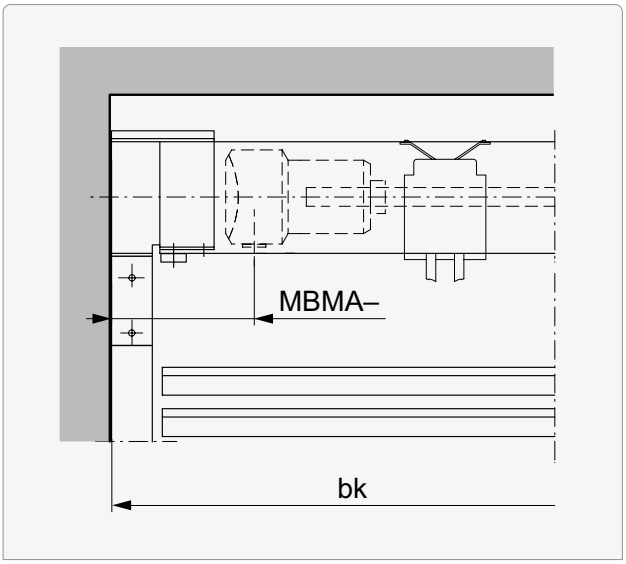

Version	MBMA+	MBMA–
Conventional	0 ... 500	0 ... (bk / 2)*
Self-supporting (Fix)	26 ... 125 (10 ... 25)[1]	90 ... (bk / 2)

[1] for reverse mounted gearbox

* ≤30: Gearbox niche required

Vertical connections | Standard motor position

Number of bearings

Lamisol® III 70

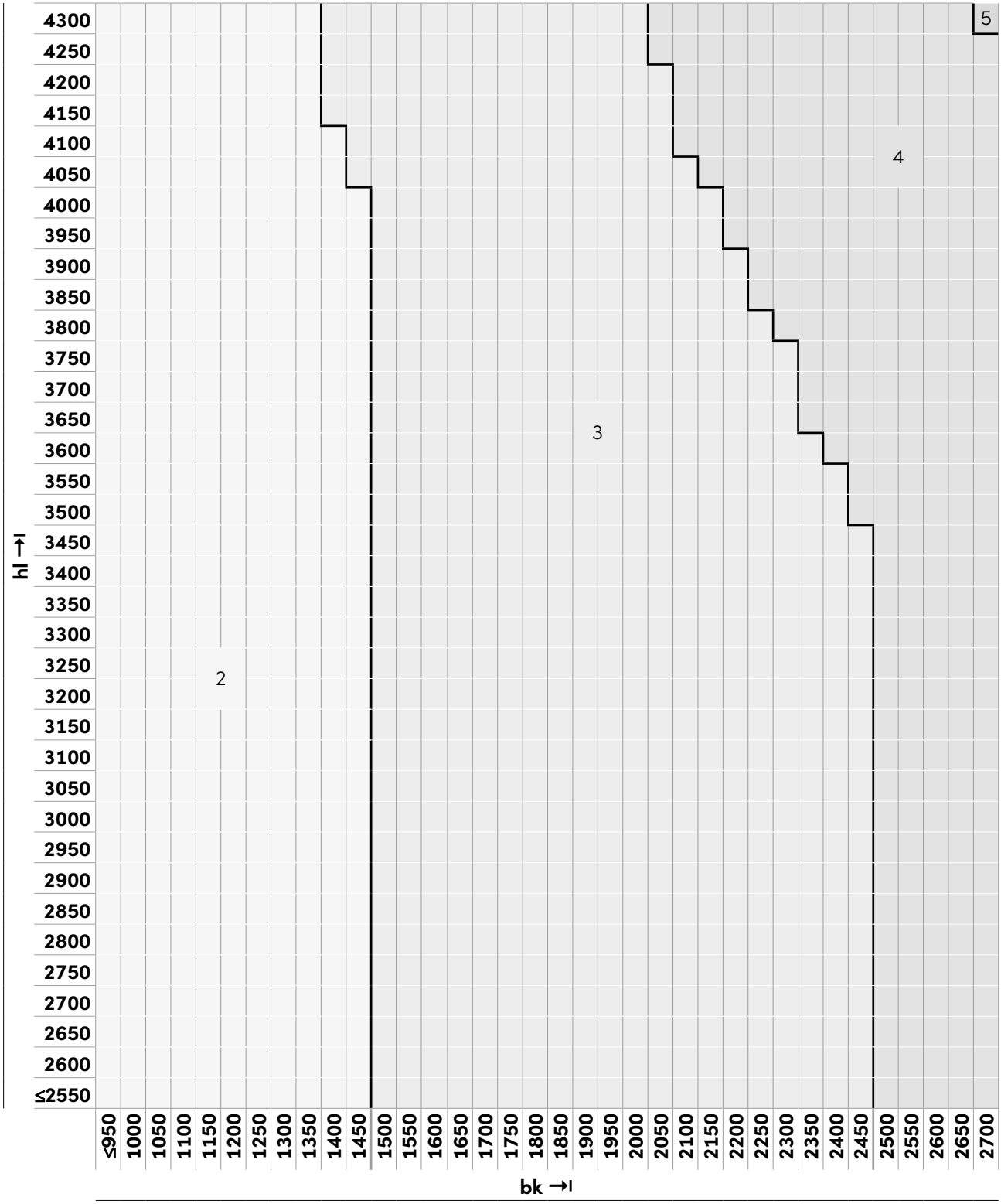

Standard motor position 91

Vertical connections | Standard motor position

Number of bearings

Lamisol® III 70

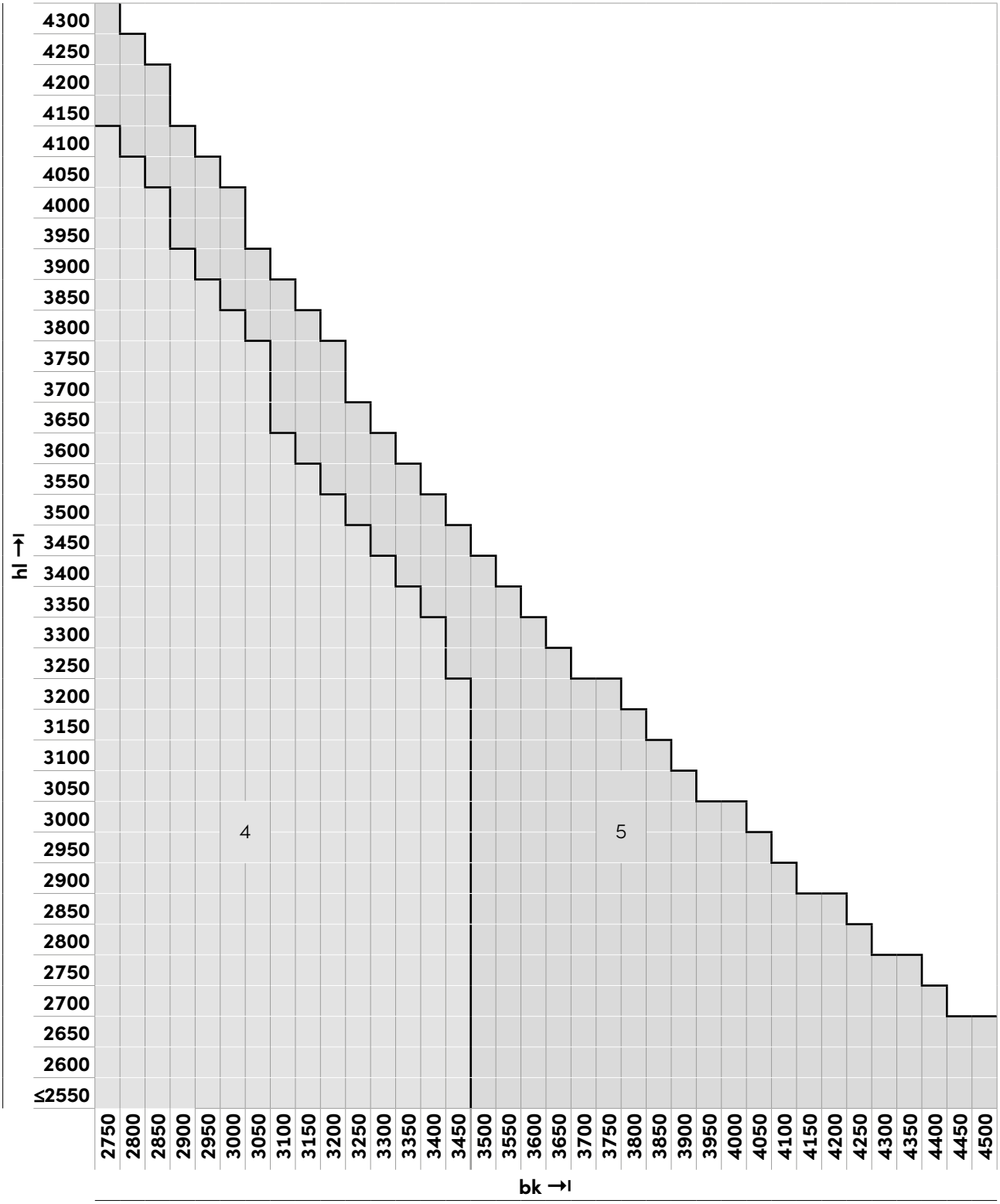

Vertical connections | Standard motor position

Number of bearings

Lamisol® III 90

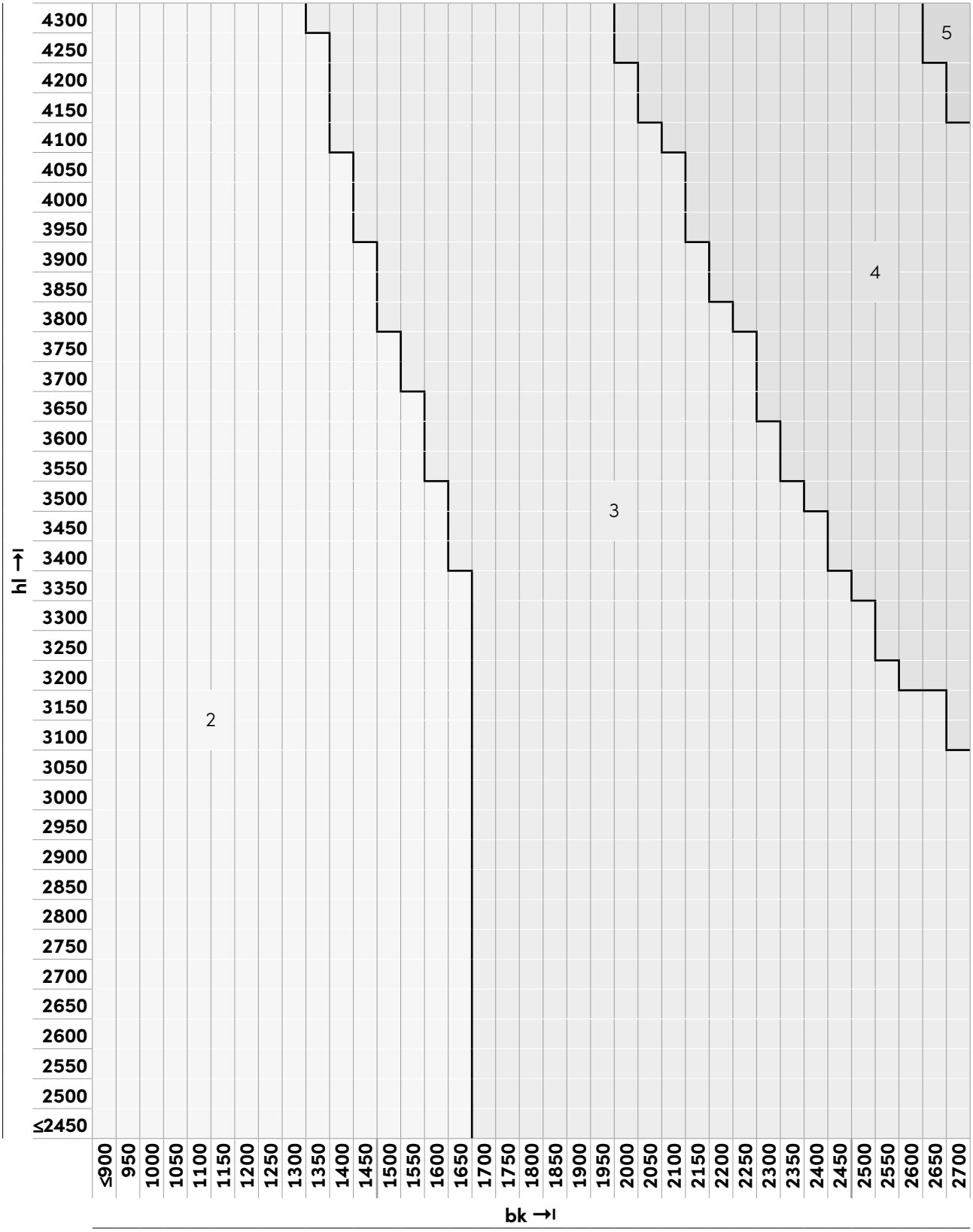

Standard motor position 91

Vertical connections | Standard motor position

Number of bearings

Lamisol® III 90

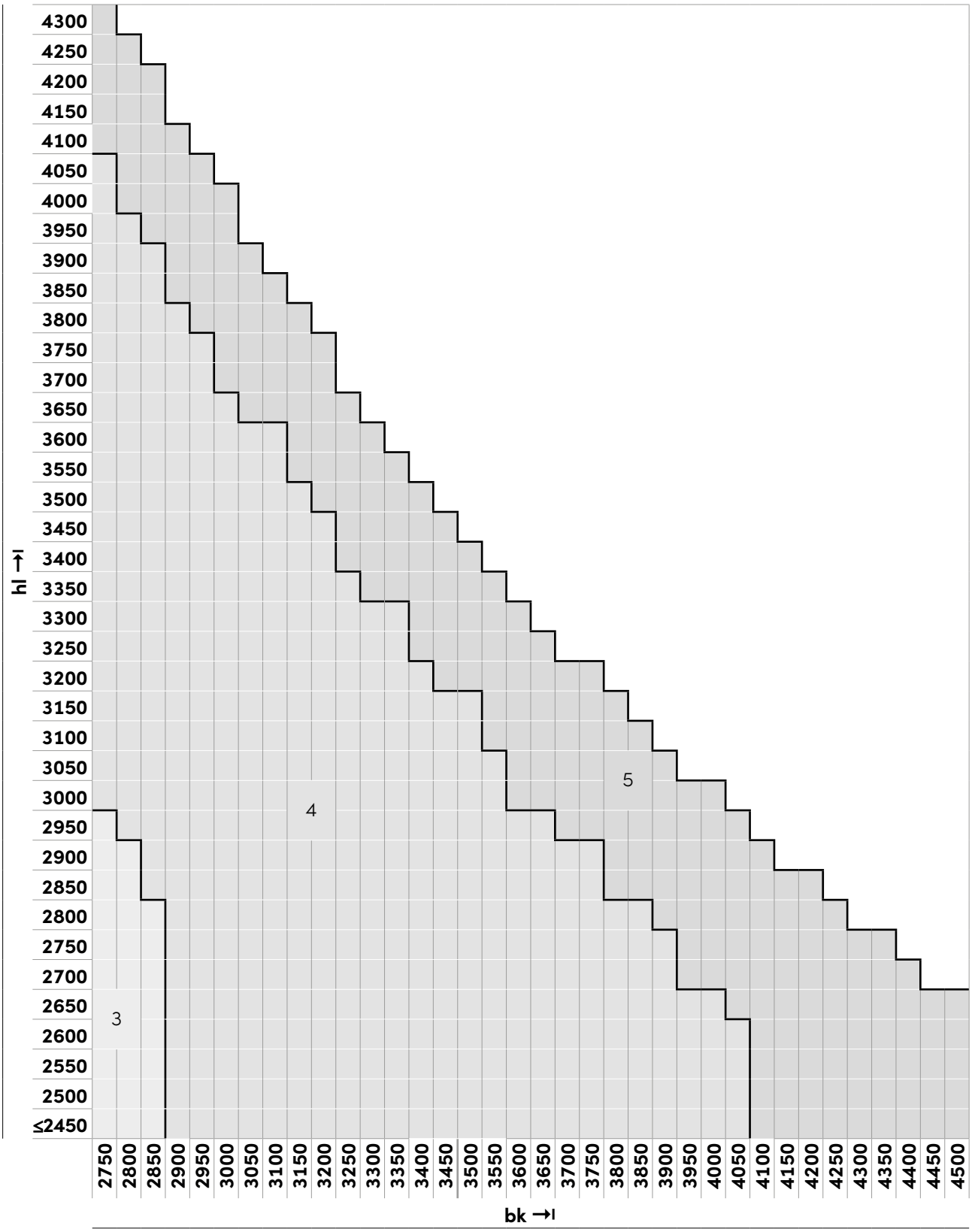

Vertical connections | Standard motor position

Standard motor position

Number of bearings	Standard motor position
2	
3	
4	
5	

Bearing
M Standard motor position
M Possible motor position (on request)

Guide rail installation (principle)

Guides attached (to soffit) | Type A

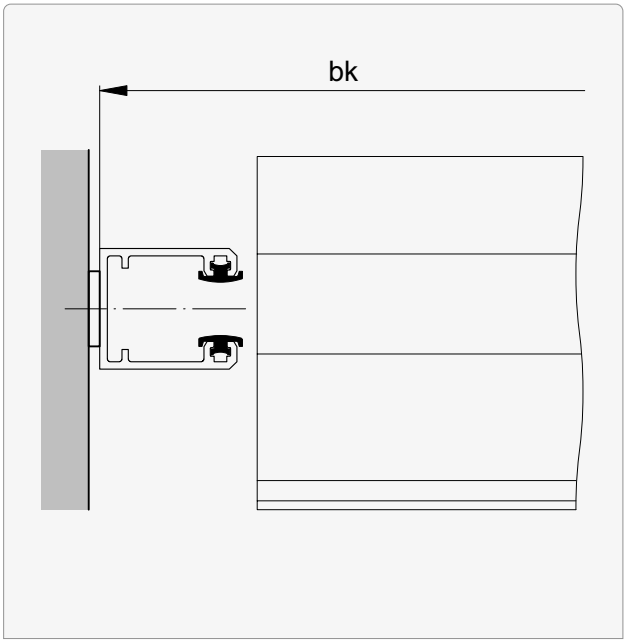

Guides suspended

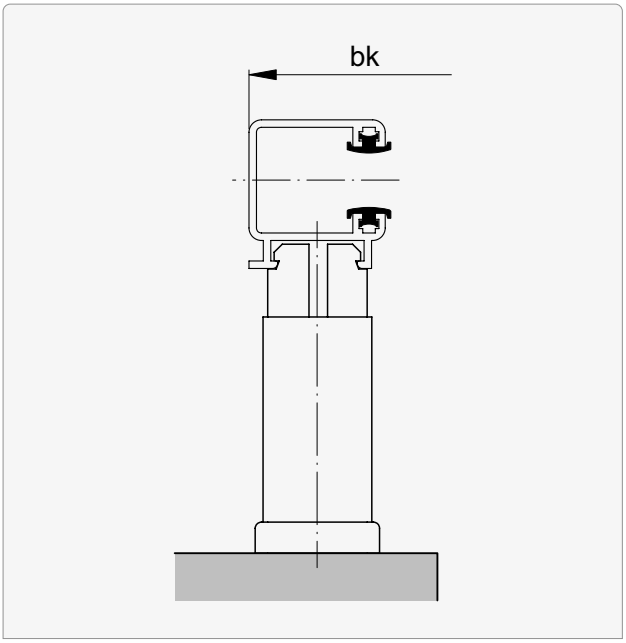

Observe possible guide rail spacer for **bk**.
Standard: 2 mm

Guide rail installation (principle)

Guides recessed

***Type F | Without guide cut-out:**
Only possible if curtain can be retracted from below.

Type E | F* | L

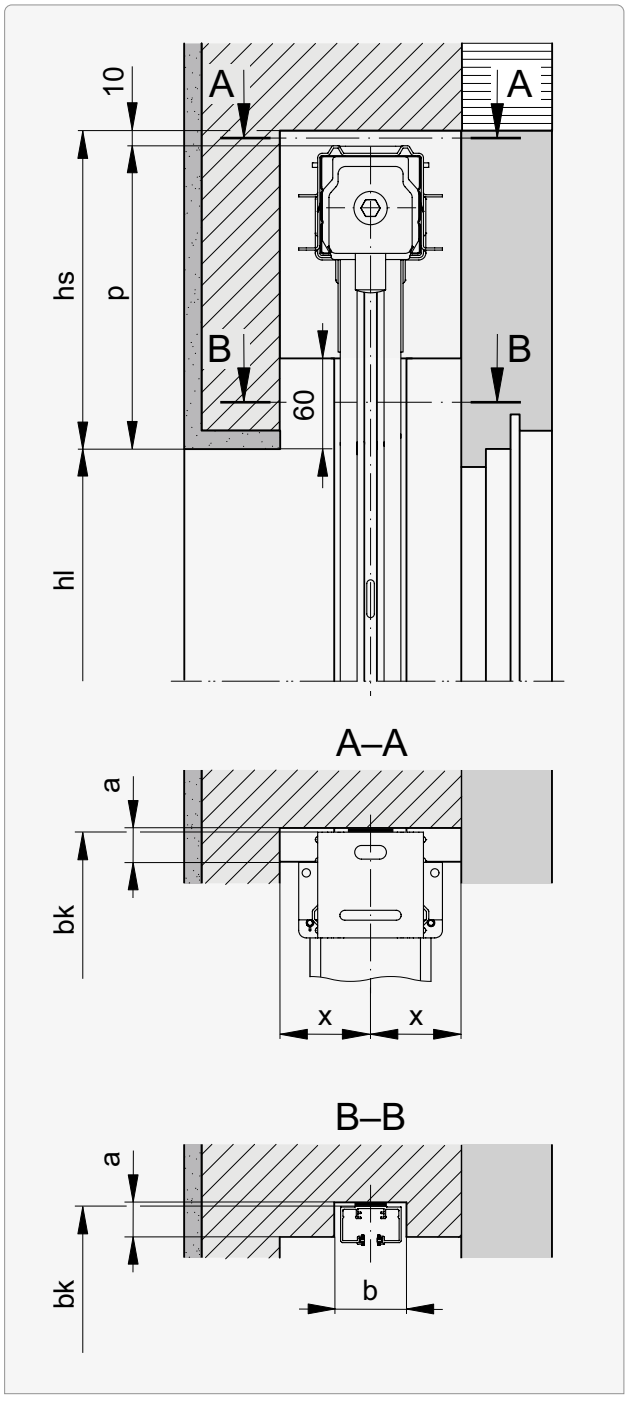

Type E

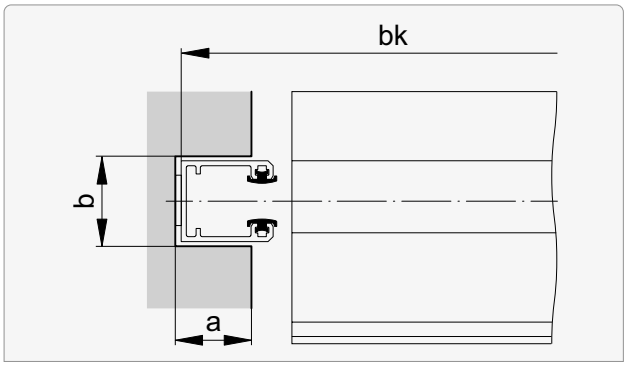

Type F*

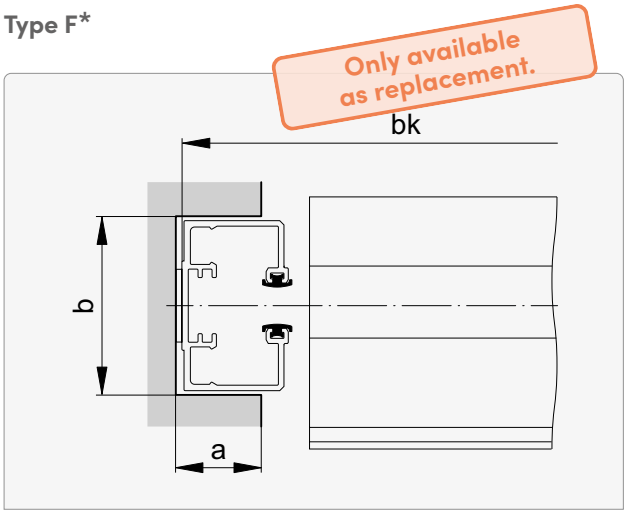

Type L

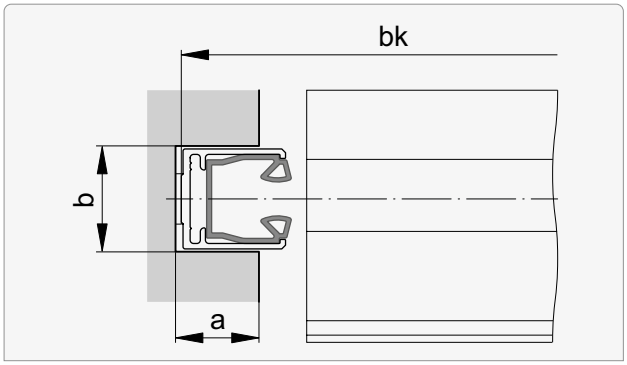

Product | Version	x min.
Lamisol® III 70 Fix	50
Lamisol® III 90 Fix	65

Type	a	b
E	≤18	≥21
F*	≤20	≥42
L	≤24	≥25

Guide rail fastenings (principle)

Overview

Type														
A	B	Bd	C	Cd	E	F	G	H	Kv	M	T	Tv	V	Wv
●	●	●	●	●	●	●	–	–	○[1]	○[2]	●	●	●	●

● applicable without restrictions

○ applicable with restrictions:
[1] only with guide **type C | T | R**
[2] only with guide **type E**

A Soffit installation

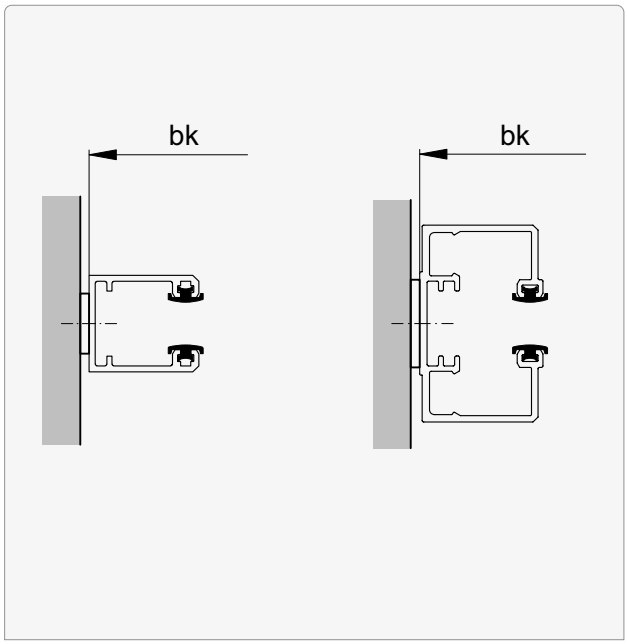

Transverse and holding force per fastening point at least 1000 N.

Observe possible guide rail spacer for **bk**.
Standard: 2 mm

Guide rail fastenings (principle)

B Installation with fastening bracket

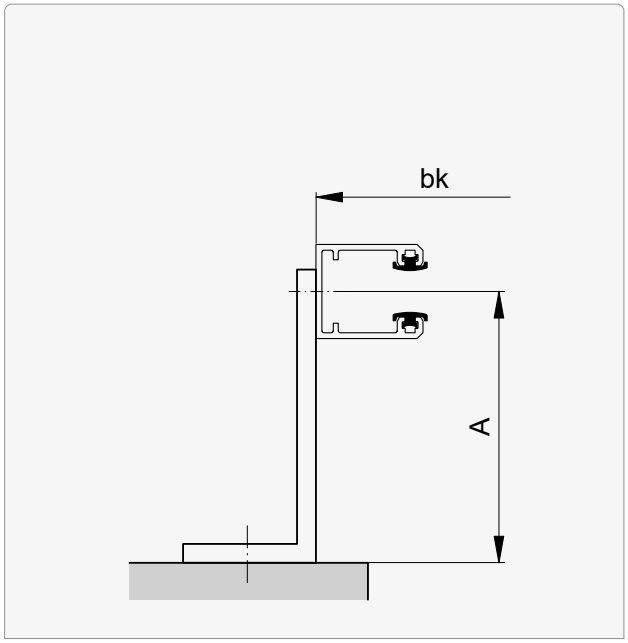

Bracket outwards

C Installation with fastening bracket

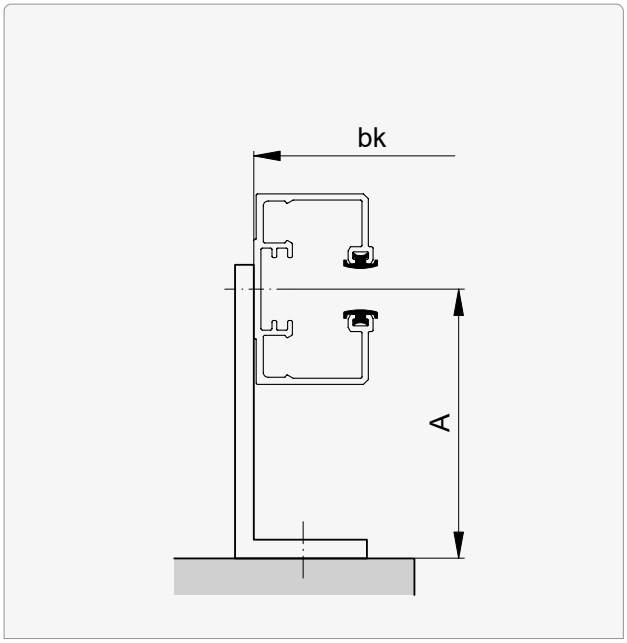

Bracket inwards

Fastening bracket for types B and C

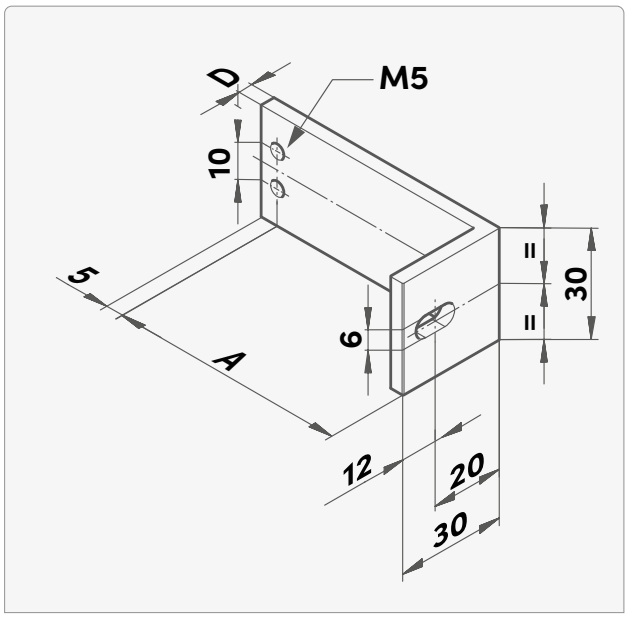

A*	D
20 ... 115	4

For suspended guide rails always with **brackets 70 mm**.

Transverse force at least 700 N and holding force:

A*	bk < 1.5 m	bk < 2.5 m	bk < 3.5 m	bk < 4.5 m
0 ... 45	700 N	700 N	700 N	700 N
46 ... 90	700 N	1000 N	1200 N	700 N
91 ... 205	1100 N	2300 N	2600 N	1400 N
206 ... 300	1600 N	3400 N	3800 N	2100 N

* in 5 mm steps

20261109

Guide rail fastenings (principle)

Fastening bracket 70 mm for types B and C

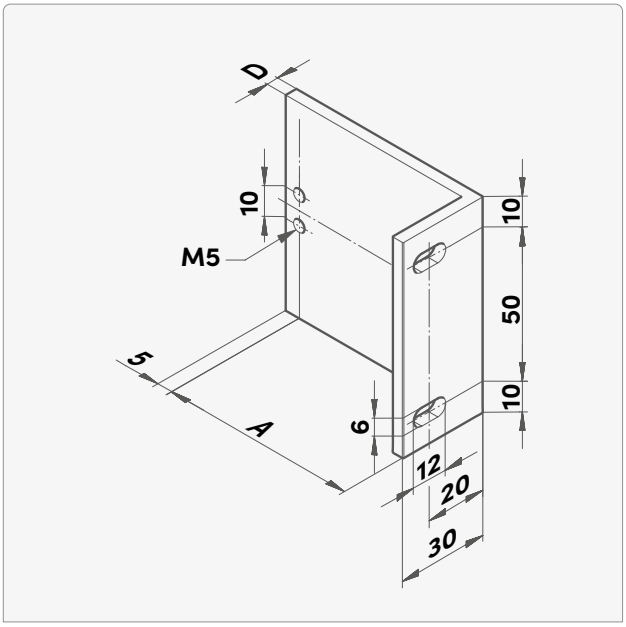

A*	D
20 ... 115	4
120 ... 215	5

Transverse force at least 1000 N and holding force at least 3500 N per fastening point.

If the **projection is ≥ 120**, all products are fastened with a **70 mm bracket**.

* in 5 mm steps

Guide rail fastenings (principle)

Bd Installation with continuous fastening bracket

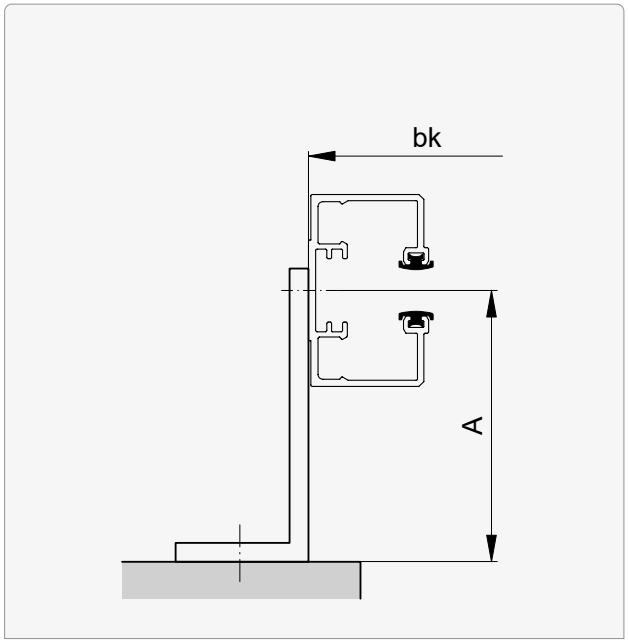

Bracket outwards

Cd Installation with continuous fastening bracket

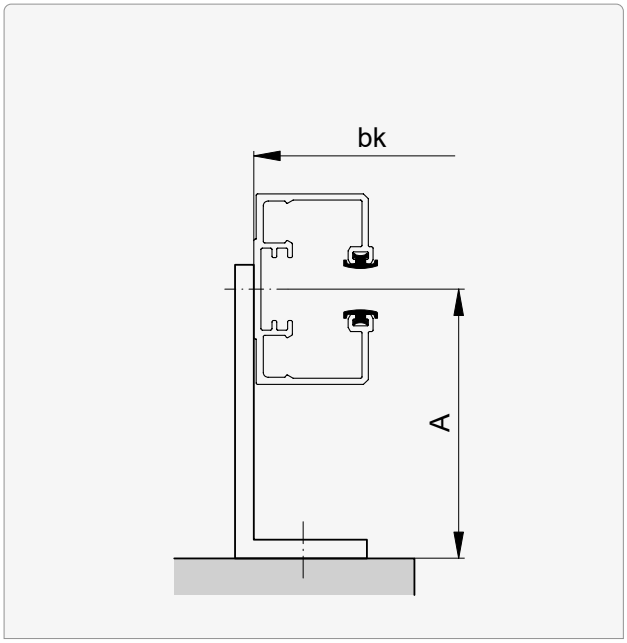

Bracket inwards

Continuous fastening bracket for types Bd and Cd

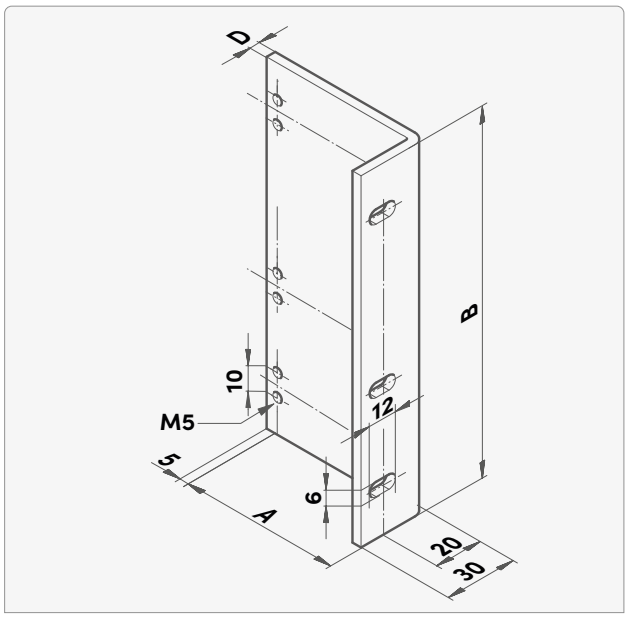

A*	D
20 ... 300	always 4

Transverse force at least 700 N and holding force:

A*	bk < 1.5 m	bk < 2.5 m	bk < 3.5 m	bk < 4.5 m
0 ... 45	700 N	1900 N	2100 N	1100 N
46 ... 90	1700 N	3800 N	4200 N	2300 N
91 ... 205	4000 N	8500 N	9500 N	5200 N
206 ... 300	5800 N	12500 N	14000 N	7500 N

* in 5 mm steps

20261109

Guide rail fastenings (principle)

E | F Installation with fastening lug

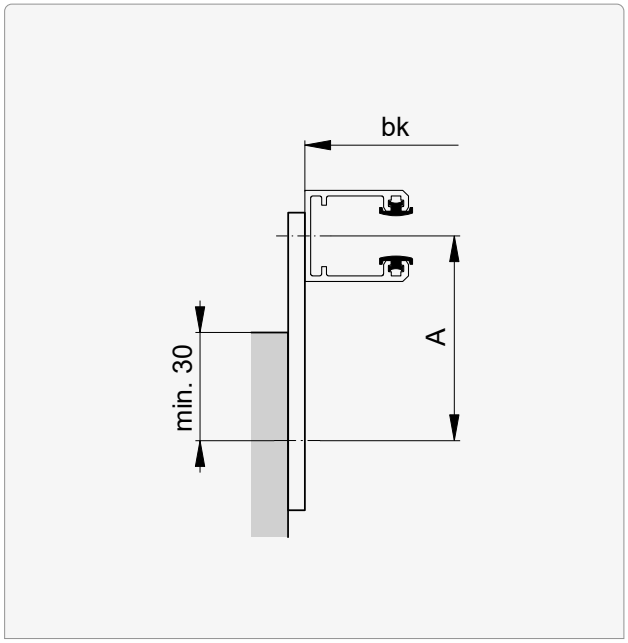

inwards / outwards

Kv Installation with adjustable console

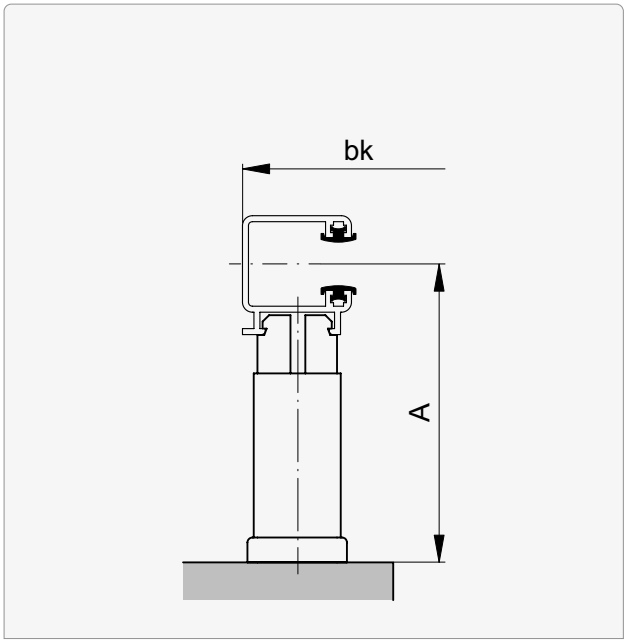

Only with guide type C|T|R

Fastening lug for type E | F

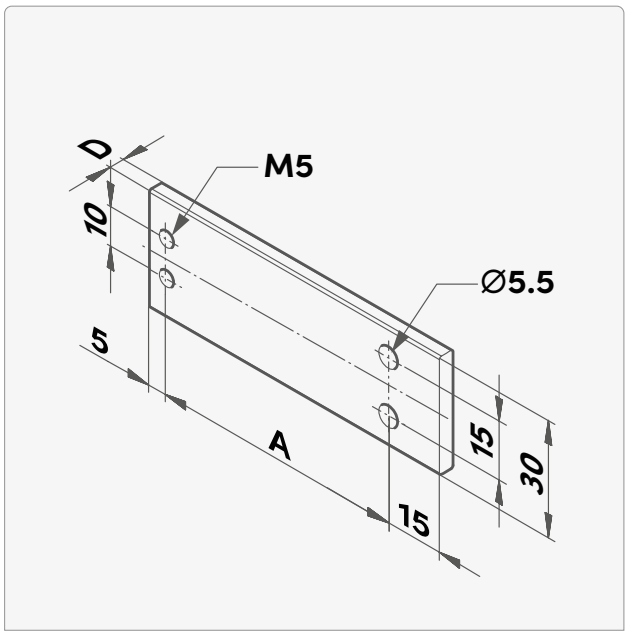

A*	D
50 ... 115	4
120 ... 125	5

Transverse force at least 1000 N and holding force at least 2000 N per fastening point.

* in 5 mm steps

Console for type Kv

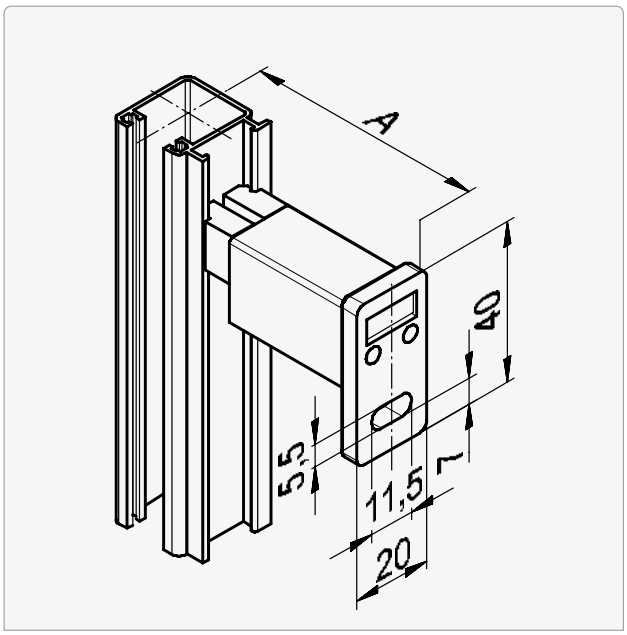

A	A
60 ... 75	121 ... 135
76 ... 90	136 ... 150
91 ... 105	151 ... 165
106 ... 120	166 ... 180
	181 ... 195

Transverse force at least 1000 N and holding force at least 2500 N per fastening point.

Guide rail fastenings (principle)

M Installation with centre bracket

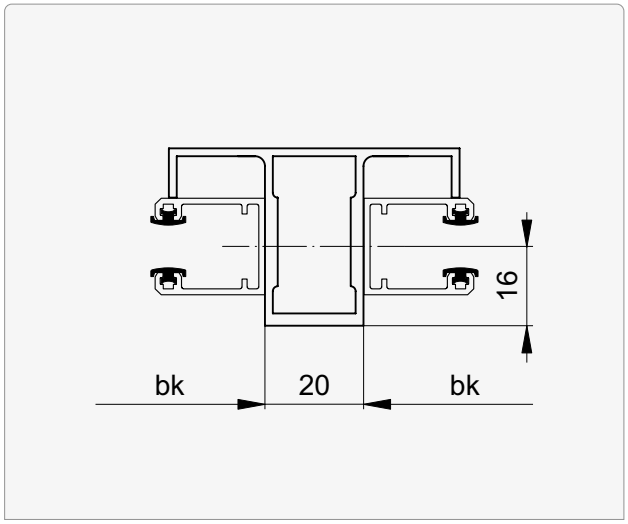

Only with guide type E
Length = Guide length

Principle

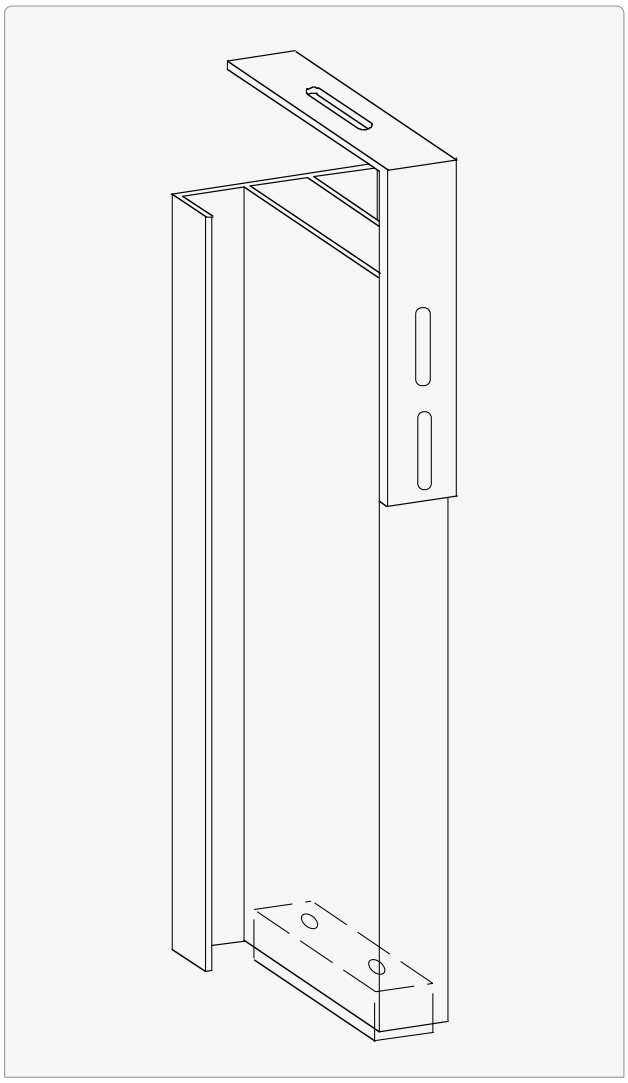

Fastening bracket above centre bracket

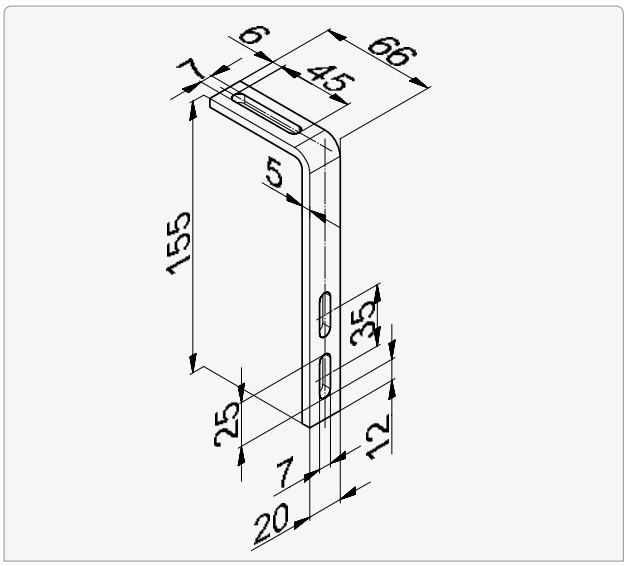

Transverse force at least 1000 N and holding force at least 3300 N per fastening point.

Fastening square below for centre bracket

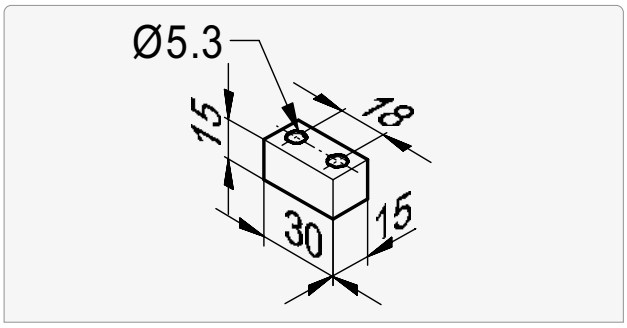

Guide rail fastenings (principle)

T Installation with T-bracket

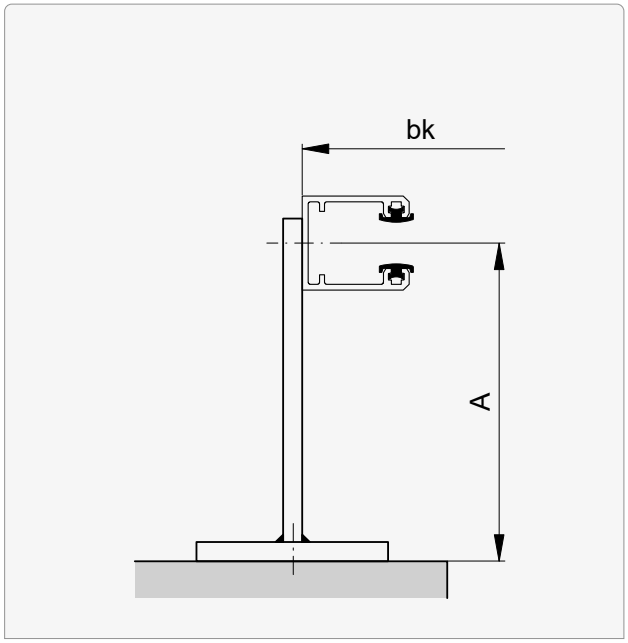

Tv Installation with adjustable T-bracket

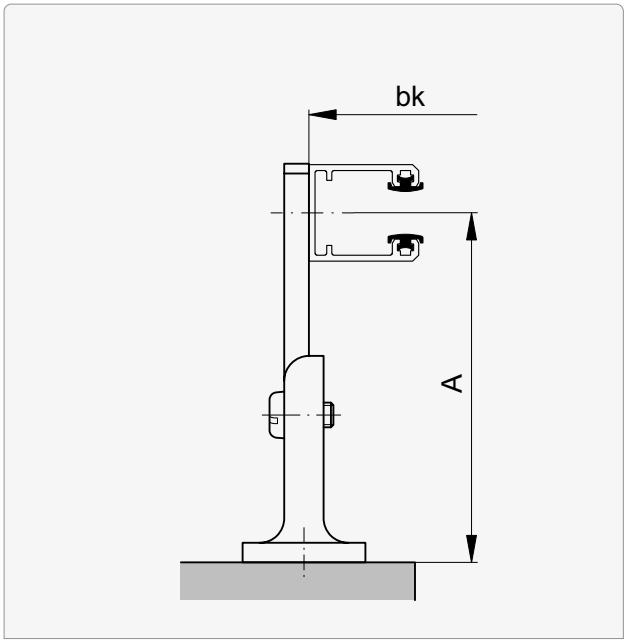

T-bracket for type T

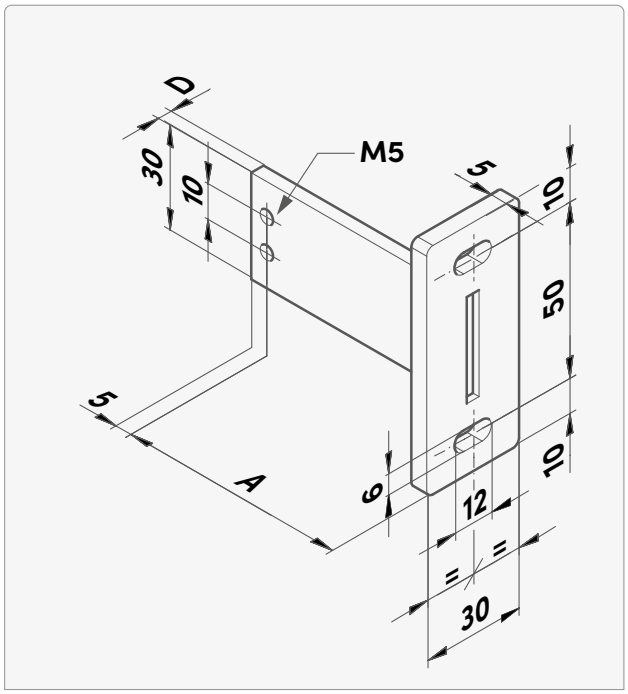

A*	D
20 ... 115	4
120 ... 215	5

Transverse force at least 1000 N and holding force at least 3300 N per fastening point.

* in 5 mm steps

T-bracket adjustable for type Tv

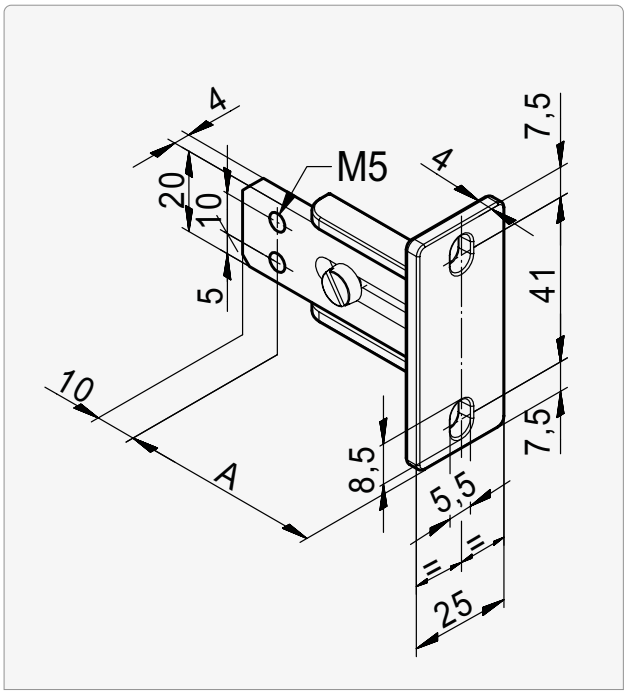

A
50 ... 68
69 ... 87
88 ... 106
107 ... 115

Transverse force at least 1000 N and holding force at least 2000 N per fastening point.

Guide rail fastenings (principle)

V Installation with one bracket

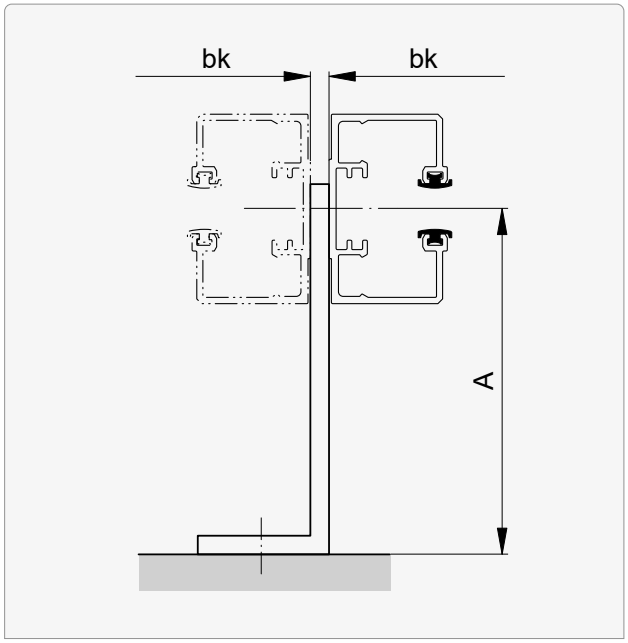

The blind on the right uses the fastening for the blind on the left.

Transverse and holding force per fastening point at least 1000 N.

Wv Installation with adjustable bracket

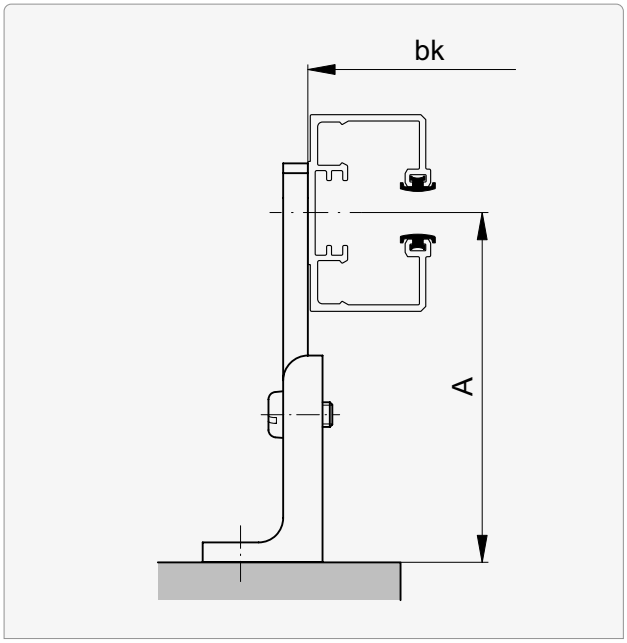

W-bracket adjustable for type Wv

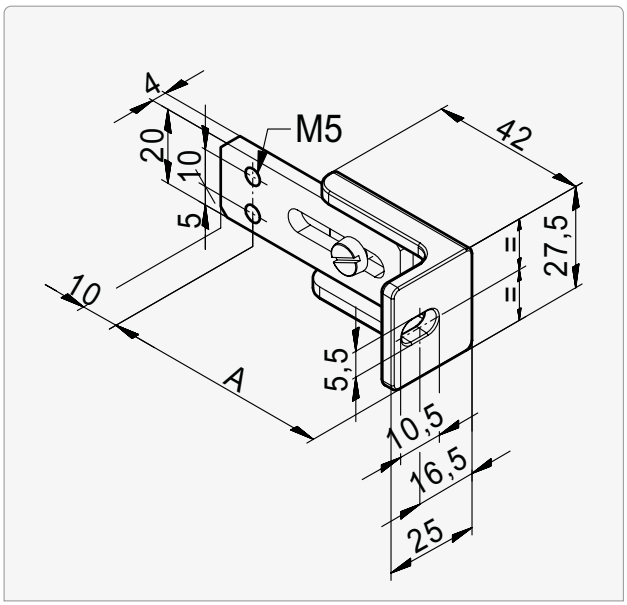

A
50 ... 68
69 ... 87
88 ... 106
107 ... 115

Transverse force at least 1000 N and holding force at least 2000 N per fastening point.

Guide extension and facet

Extension

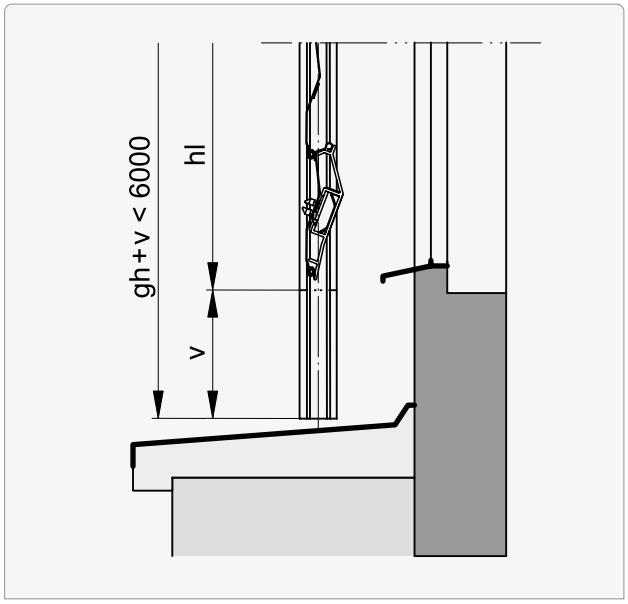

v
–35 ... 3000

Facet

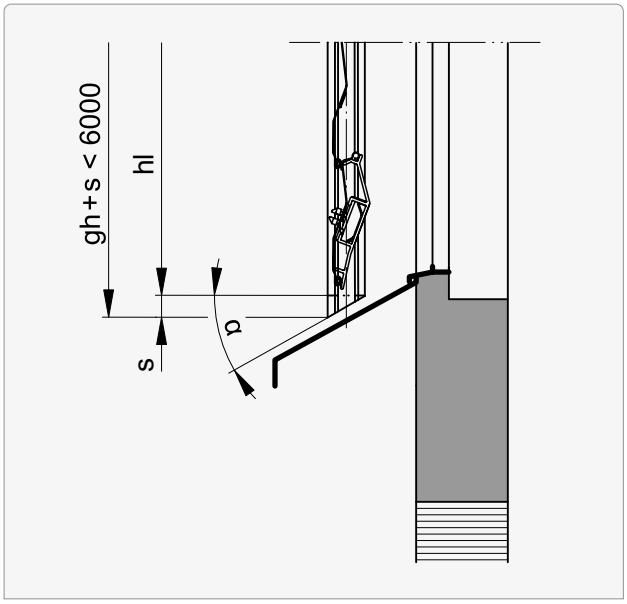

α
5 ... 50°

Extension and facet

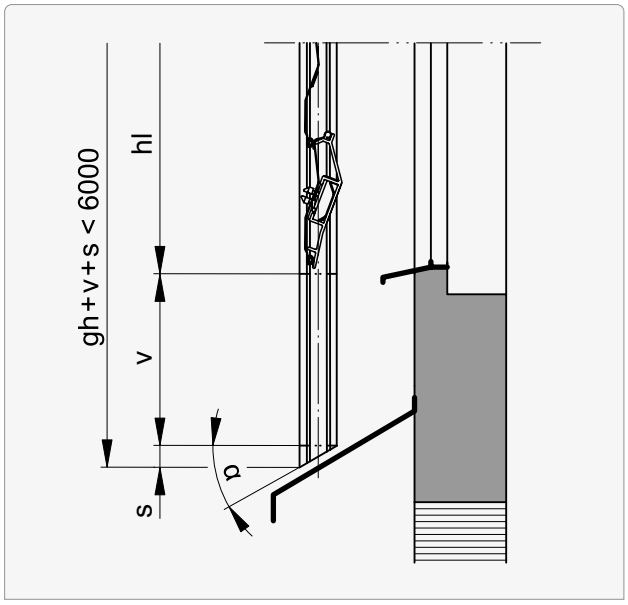

v	α
0 ... 3000	5 ... 50°

Value for **s** **103**

Angling at the guides

Type E | Single guide

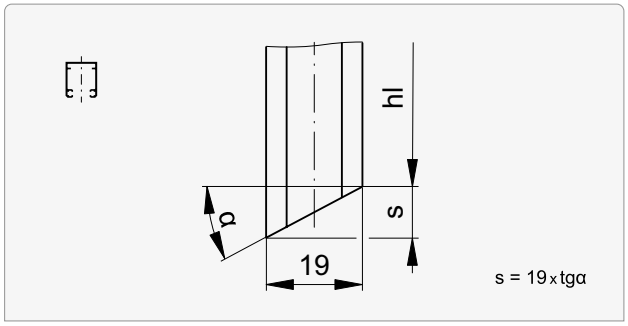

α	s	α	s	α	s	α	s	α	s
5	2	**15**	5	**25**	9	**35**	13	**45**	19
6	2	**16**	5	**26**	9	**36**	14	**46**	20
7	2	**17**	6	**27**	10	**37**	14	**47**	20
8	3	**18**	6	**28**	10	**38**	15	**48**	21
9	3	**19**	7	**29**	11	**39**	15	**49**	22
10	3	**20**	7	**30**	11	**40**	16	**50**	23
11	4	**21**	7	**31**	11	**41**	17		
12	4	**22**	8	**32**	12	**42**	17		
13	4	**23**	8	**33**	12	**43**	18		
14	5	**24**	8	**34**	13	**44**	18		

Type C | Single guide

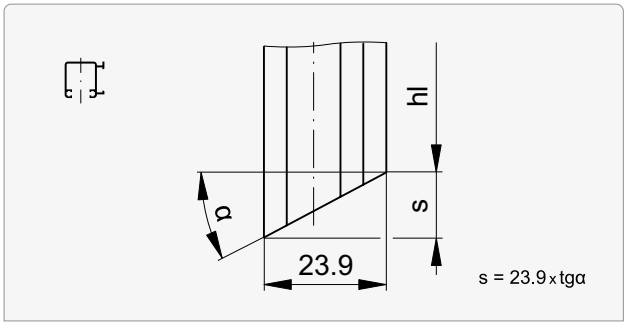

α	s	α	s	α	s	α	s	α	s
5	2	**15**	6	**25**	11	**35**	17	**45**	24
6	3	**16**	7	**26**	12	**36**	17	**46**	25
7	3	**17**	7	**27**	12	**37**	18	**47**	26
8	3	**18**	8	**28**	13	**38**	19	**48**	27
9	4	**19**	8	**29**	13	**39**	19	**49**	27
10	4	**20**	9	**30**	14	**40**	20	**50**	28
11	5	**21**	9	**31**	14	**41**	21		
12	5	**22**	10	**32**	15	**42**	22		
13	6	**23**	10	**33**	16	**43**	22		
14	6	**24**	11	**34**	16	**44**	23		

Type L | Fix guide

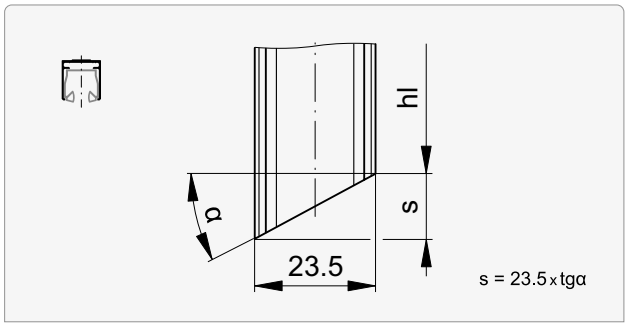

α	s	α	s	α	s	α	s	α	s
5	2	**15**	6	**25**	11	**35**	16	**45**	24
6	2	**16**	7	**26**	11	**36**	17	**46**	24
7	3	**17**	7	**27**	12	**37**	18	**47**	25
8	3	**18**	8	**28**	12	**38**	18	**48**	26
9	4	**19**	8	**29**	13	**39**	19	**49**	27
10	4	**20**	9	**30**	14	**40**	20	**50**	28
11	5	**21**	9	**31**	14	**41**	20		
12	5	**22**	9	**32**	15	**42**	21		
13	5	**23**	10	**33**	15	**43**	22		
14	6	**24**	10	**34**	16	**44**	23		

Type F | Fix guide

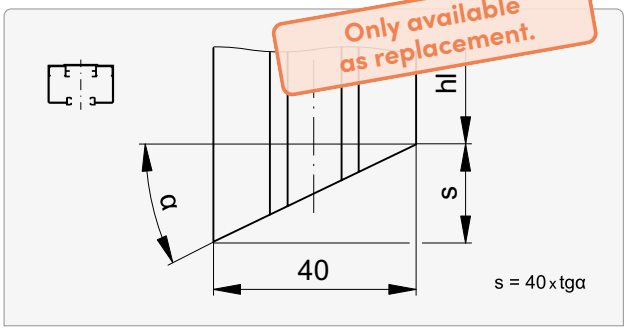

α	s	α	s	α	s	α	s	α	s
5	3	**15**	11	**25**	19	**35**	28	**45**	40
6	4	**16**	11	**26**	20	**36**	29	**46**	41
7	5	**17**	12	**27**	20	**37**	30	**47**	43
8	6	**18**	13	**28**	21	**38**	31	**48**	44
9	6	**19**	14	**29**	22	**39**	32	**49**	46
10	7	**20**	15	**30**	23	**40**	34	**50**	48
11	8	**21**	15	**31**	24	**41**	35		
12	9	**22**	16	**32**	25	**42**	36		
13	9	**23**	17	**33**	26	**43**	37		
14	10	**24**	18	**34**	27	**44**	39		

Angling at the guides

Type T | Double guide

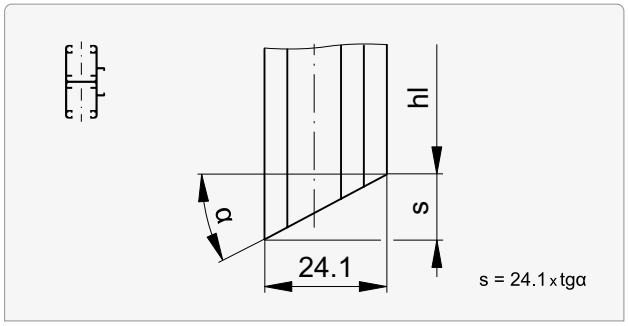

α	s	α	s	α	s	α	s	α	s
5	2	**15**	6	**25**	11	**35**	17	**45**	24
6	3	**16**	7	**26**	12	**36**	18	**46**	25
7	3	**17**	7	**27**	12	**37**	18	**47**	26
8	3	**18**	8	**28**	13	**38**	19	**48**	27
9	4	**19**	8	**29**	13	**39**	20	**49**	28
10	4	**20**	9	**30**	14	**40**	20	**50**	29
11	5	**21**	9	**31**	14	**41**	21		
12	5	**22**	10	**32**	15	**42**	22		
13	6	**23**	10	**33**	16	**43**	22		
14	6	**24**	11	**34**	16	**44**	23		

Type D | Double guide

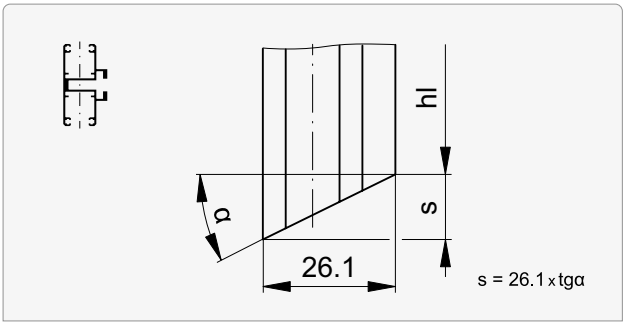

α	s	α	s	α	s	α	s	α	s
5	2	**15**	7	**25**	12	**35**	18	**45**	26
6	3	**16**	7	**26**	13	**36**	19	**46**	27
7	3	**17**	8	**27**	13	**37**	20	**47**	28
8	4	**18**	8	**28**	14	**38**	20	**48**	29
9	4	**19**	9	**29**	14	**39**	21	**49**	30
10	5	**20**	9	**30**	15	**40**	22	**50**	31
11	5	**21**	10	**31**	16	**41**	23		
12	6	**22**	11	**32**	16	**42**	24		
13	6	**23**	11	**33**	17	**43**	24		
14	7	**24**	12	**34**	18	**44**	25		

Type R | Curved double guide

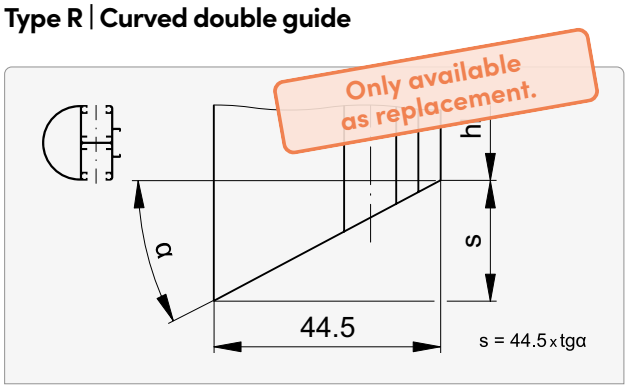

α	s	α	s	α	s	α	s	α	s
5	4	**15**	12	**25**	21	**35**	31	**45**	45
6	5	**16**	13	**26**	22	**36**	32	**46**	46
7	5	**17**	14	**27**	23	**37**	34	**47**	48
8	6	**18**	14	**28**	24	**38**	35	**48**	50
9	7	**19**	15	**29**	25	**39**	36	**49**	51
10	8	**20**	16	**30**	26	**40**	37	**50**	53
11	9	**21**	17	**31**	27	**41**	39		
12	9	**22**	18	**32**	28	**42**	40		
13	10	**23**	19	**33**	29	**43**	42		
14	11	**24**	20	**34**	30	**44**	43		

Guide rail cut-outs in windowsill area

Guide type						
C	D	E	F	L	R	T
–	–	●	●	●	–	–

Rear cut-out | without/with extension

Without extension

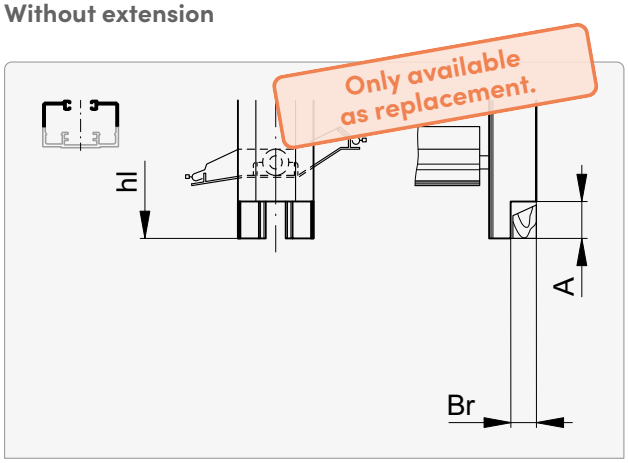

A	Br		
Guide type	E	F	L*
0 ... 25	2 ... 3	2 ... 4	2 ... 4
	5 ... 12	9 ... 12	6

*** FL ≥ 630**

Extension | v ≤ A

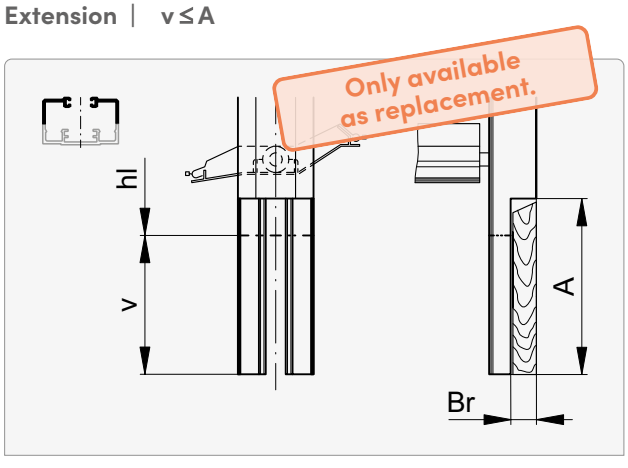

A	Br		
Guide type	E	F	L*
0 ... 25	2 ... 3	2 ... 4	2 ... 4
	5 ... 12	9 ... 12	6

*** FL ≥ 630**

Extension | v > A

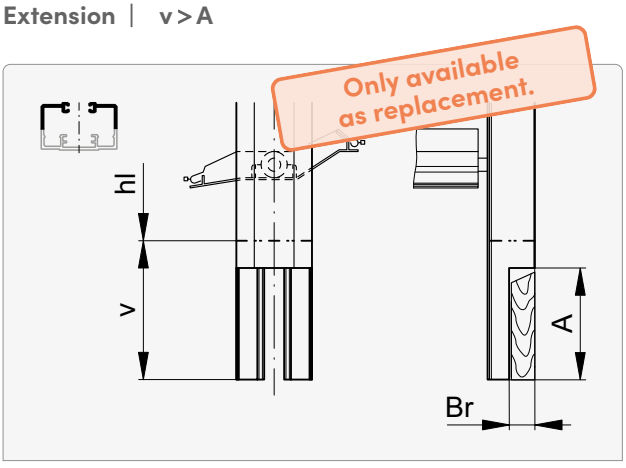

A	Br		
Guide type	E	F	L*
0 ... 25	2 ... 3	2 ... 4	2 ... 4
	5 ... 12	9 ... 12	6

*** FL ≥ 630**

v Guide rail extension: 0 ... 3000

Guide rail cut-outs in windowsill area

Inner cut-out | without / with extension

Without extension

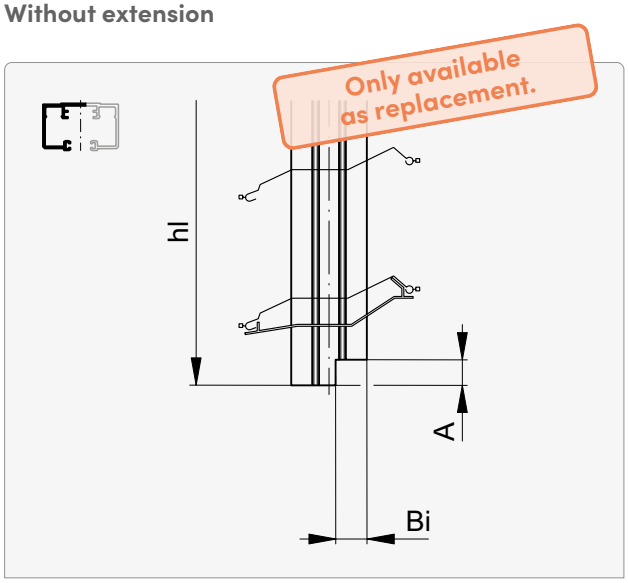

A	Bi		
Guide type	E	F	L*
0 ... 25	6 ... 12	3 ... 10	8 ... 12

*** FL ≥ 630**

Extension | v ≤ A

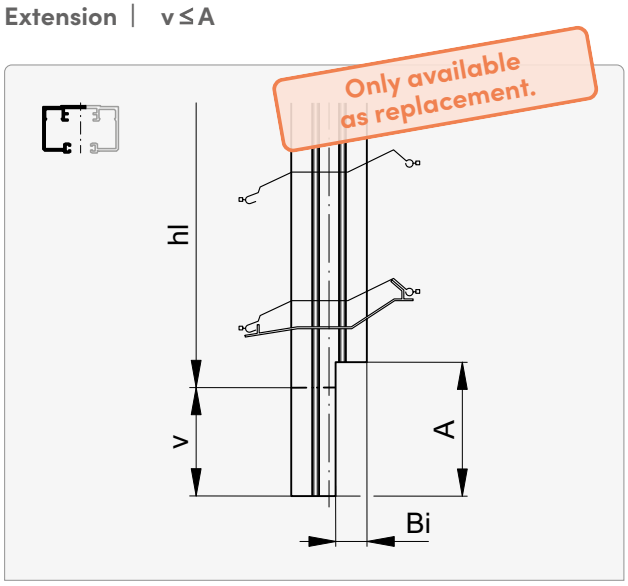

A	Bi		
Guide type	E	F	L*
0 ... 25	6 ... 12	3 ... 10	8 ... 12

*** FL ≥ 630**

Extension | v > A

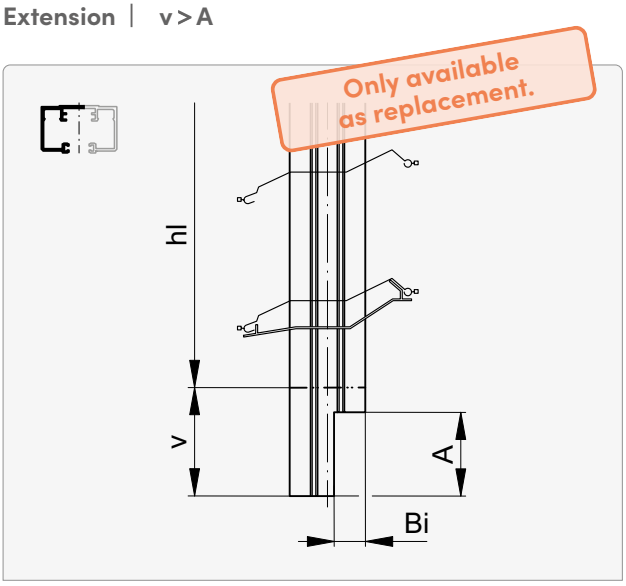

A	Bi		
Guide type	E	F	L*
0 ... 25	6 ... 12	3 ... 10	8 ... 12

*** FL ≥ 630**

v Guide rail extension: 0 ... 3000

Guide rail end for suspended guide rails

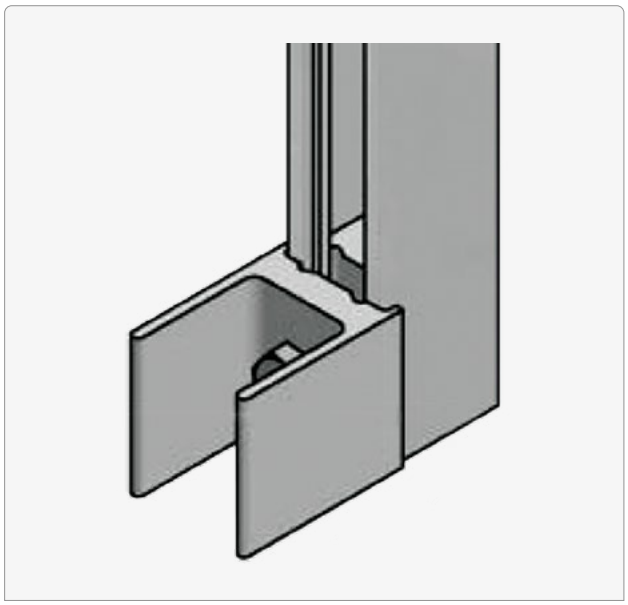

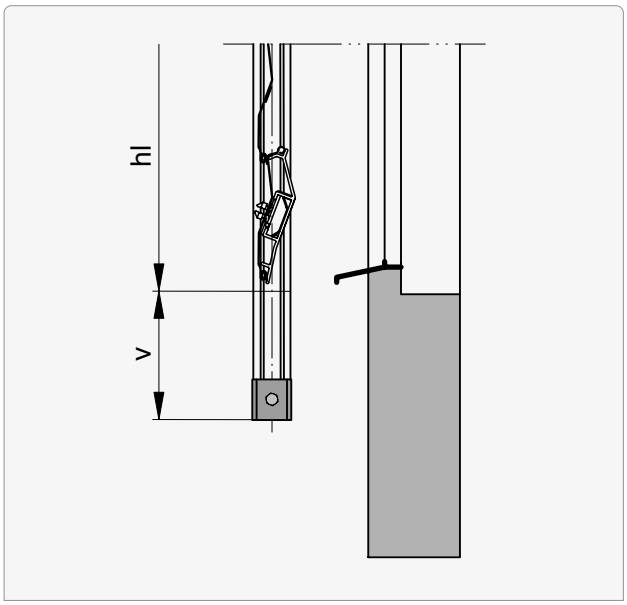

Guide type						
C	D	E	F	L	R	T
●	●	●	●	●	●	●

L*	v
70	≥30

* Guide fastening with local brackets.

Installation window

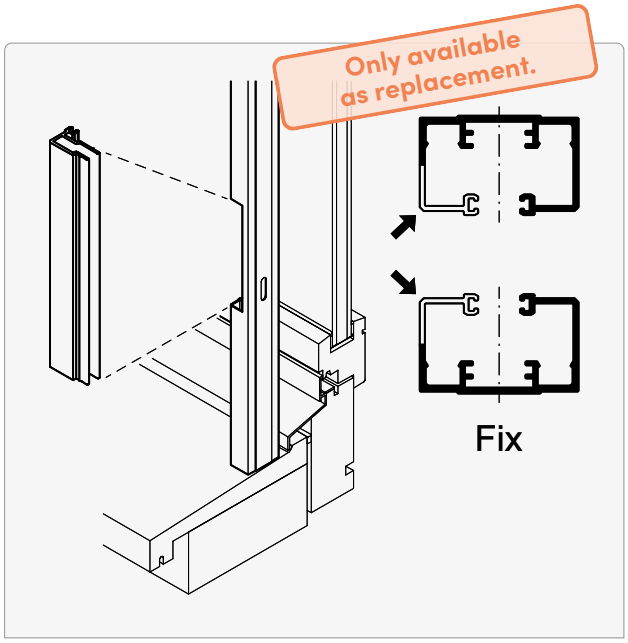

Without extension

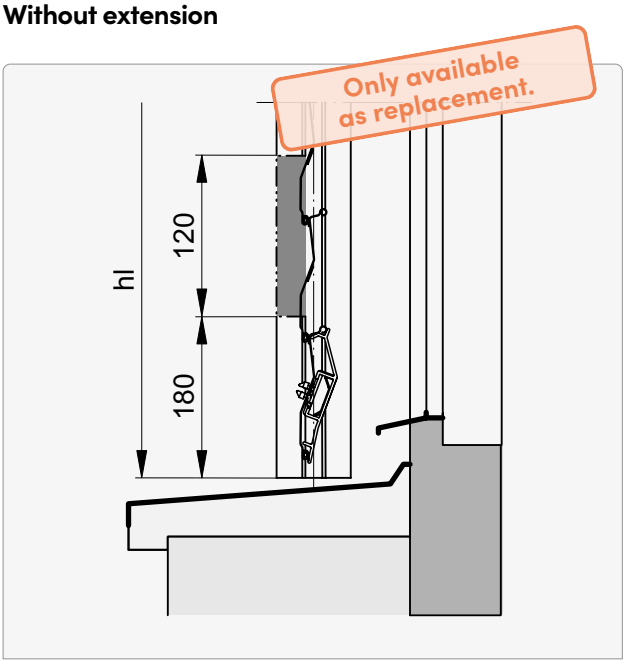

With extension

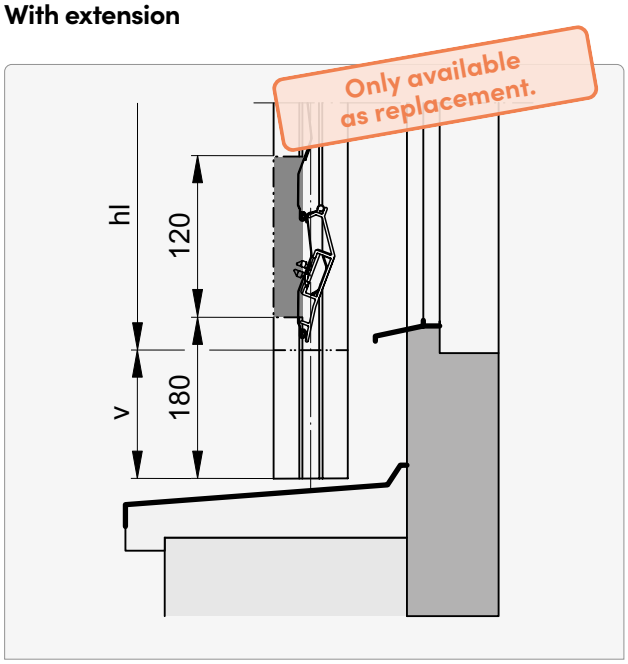

With extension and facet

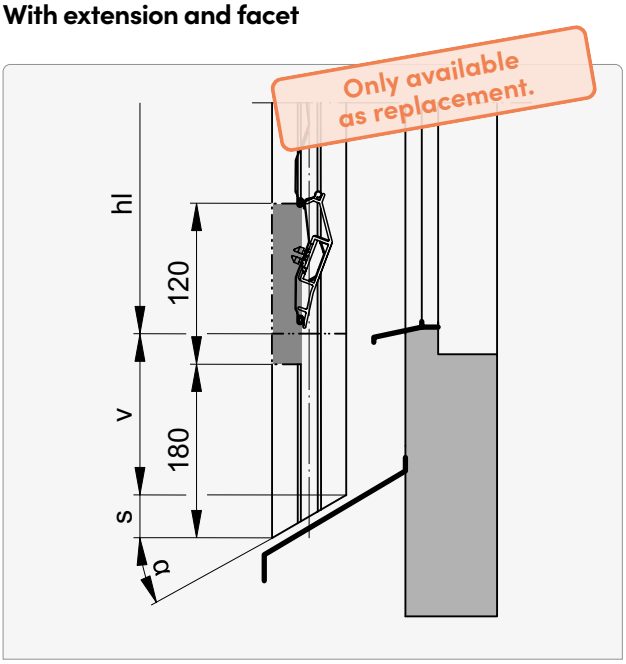

s Faceting (guide rail width x tgα)

v Guide rail extension: max. 3000

Fastening points

Transverse and holding force per fastening point at least 700 N.

Without guide rail extension

hl	**AS** min.
≤ 1500	2
1501 ... 2700	3
2701 ... 3900	4
3901 ... 5100	5
> 5100	6

Regular

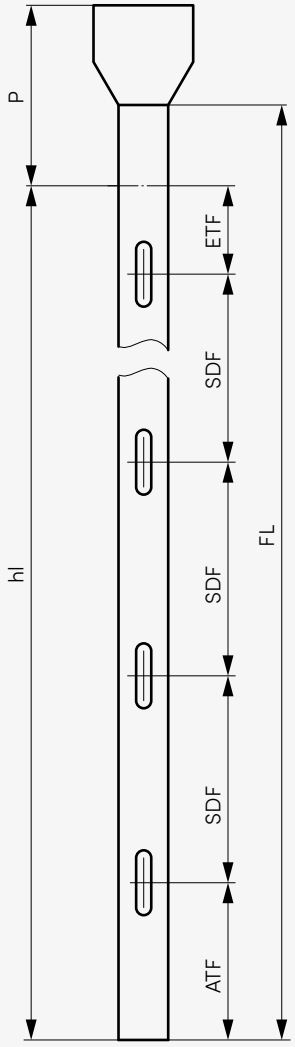

Irregular

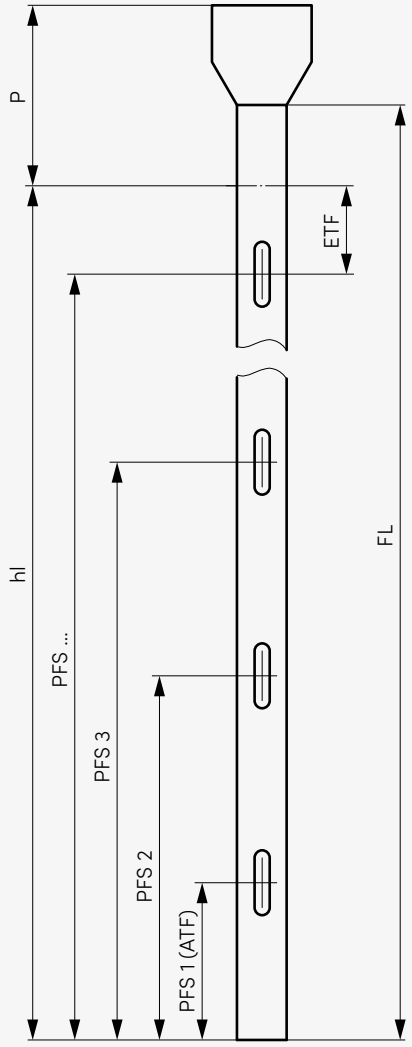

AS Number of slits
ATF Initial spacing guide rail (standard 200)
ETF Endspacing guide rail (standard 100)
FL Guide length
PFS Slot position
SDF Slot distance guide rail: 100 ... 1200

Guide rail fastenings 94
Installation window 108

Fastening points

Transverse and holding force per fastening point at least 700 N.

With guide rail extension

Z	AS min.
≤ 1500	2
1501 ... 2700	3
2701 ... 3900	4
3901 ... 5100	5
> 5100	6

Regular

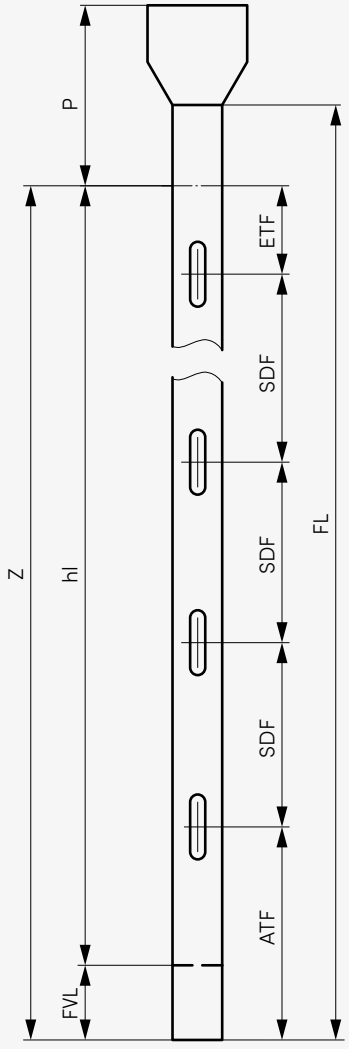

Irregular

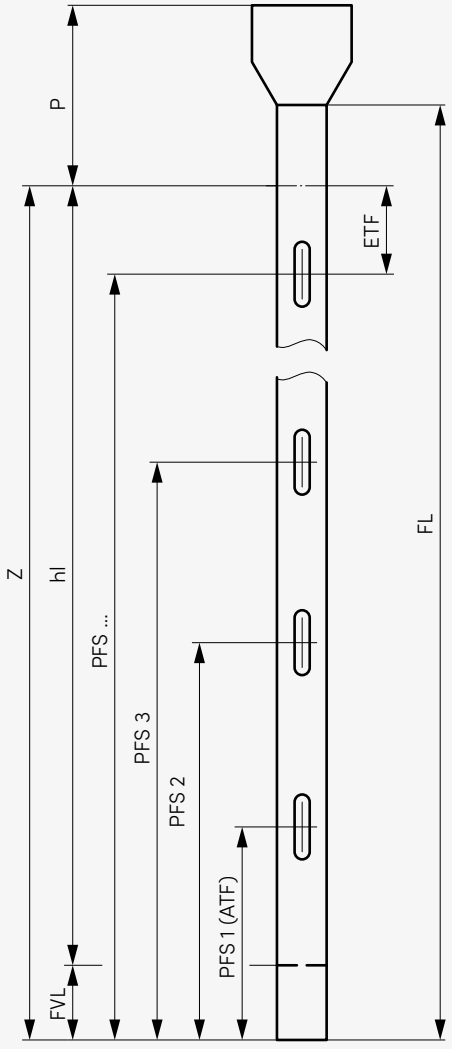

AS Number of slits
ATF Initial spacing guide rail (standard 200)
ETF Endspacing guide rail (standard 100)
FL Guide length
FVL Guide rail extension
PFS Slot position
SDF Slot distance guide rail: 100 ... 1200

Guide extension and facet **102**
Guide rail fastenings **94**
Installation window **108**

Fastening points

Transverse and holding force per fastening point at least 700 N.

Without guide rail extension, with facet

Z	AS min.
≤ 1500	2
1501 ... 2700	3
2701 ... 3900	4
3901 ... 5100	5
> 5100	6

Regular

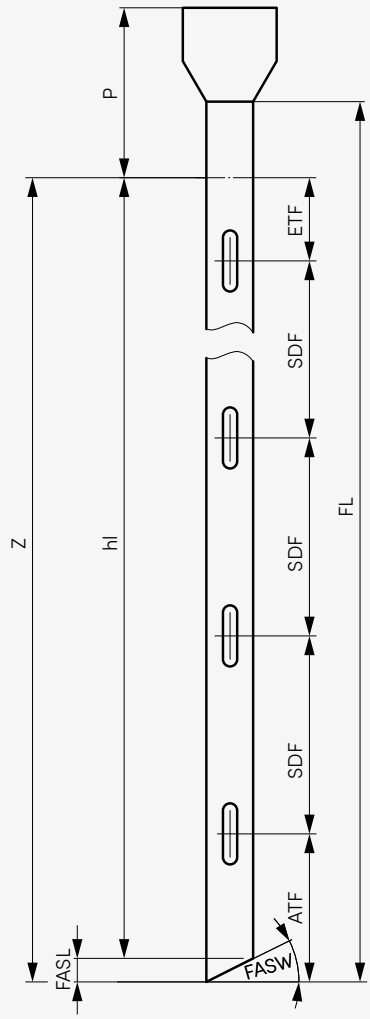

Irregular

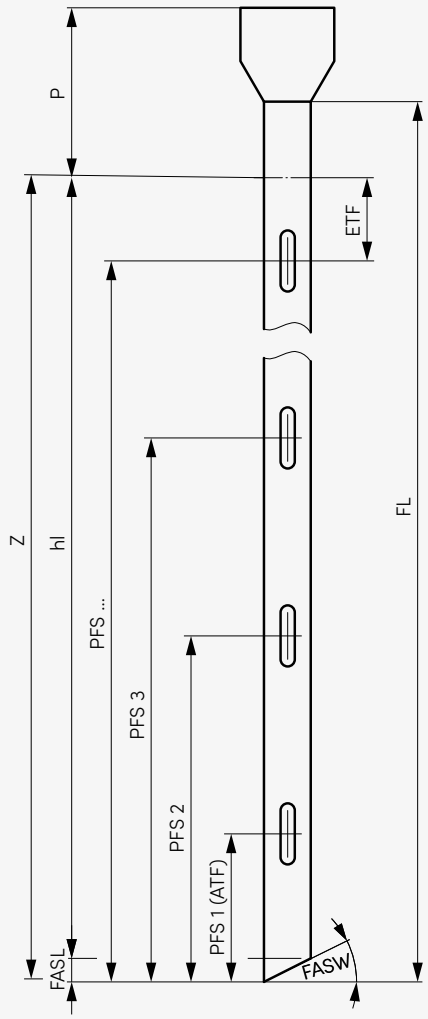

AS Number of slits
ATF Initial spacing guide rail (standard 200)
ETF Endspacing guide rail (standard 100)
FASL Guide rail facet length
FASW Guide rail facet angle
FL Guide length
PFS Slot position
SDF Slot distance guide rail: 100 ... 1200

Guide extension and facet 102
Guide rail fastenings 94
Installation window 108

Fastening points

Transverse and holding force per fastening point at least 700 N.

With guide rail extension and facet

Z	AS min.
≤ 1500	2
1501 ... 2700	3
2701 ... 3900	4
3901 ... 5100	5
> 5100	6

Regular

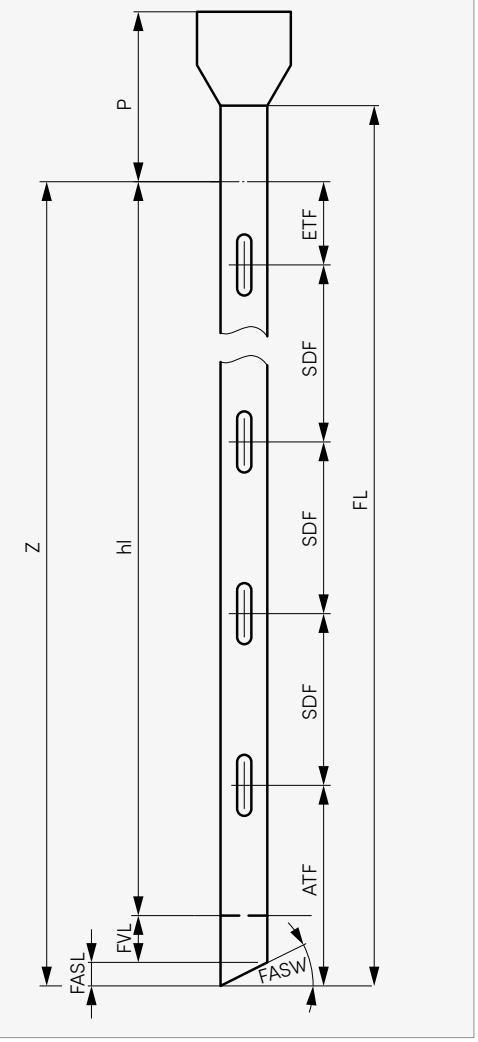

Irregular

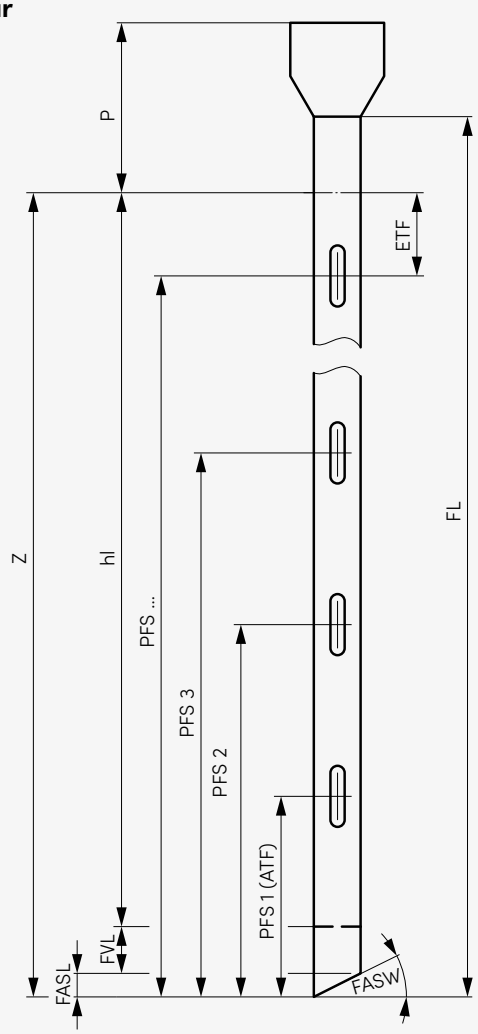

AS Number of slits
ATF Initial spacing guide rail (standard 200)
ETF Endspacing guide rail (standard 100)
FASL Guide rail facet length
FASW Guide rail facet angle

FL Guide length
FVL Guide rail extension
PFS Slot position
SDF Slot distance guide rail: 100 ... 1200

Guide extension and facet 102
Guide rail fastenings 94
Installation window 108

Connected systems

System width

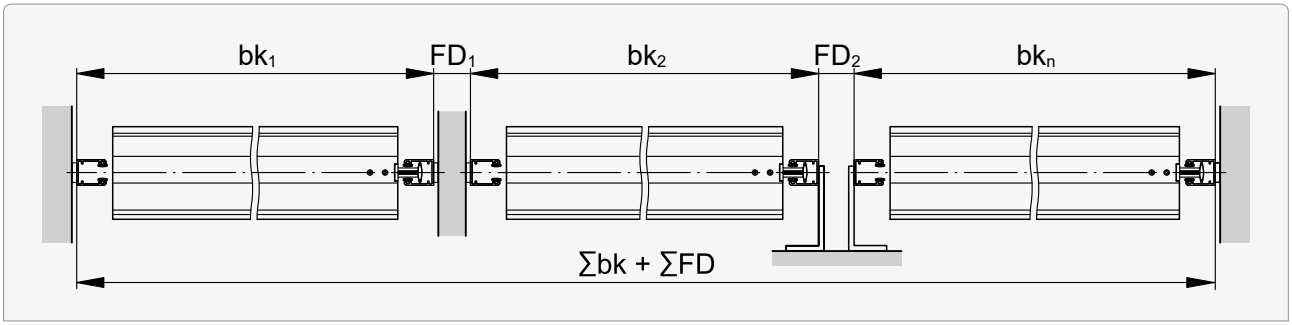

Distance between guides FD

Single guide | Fix guide

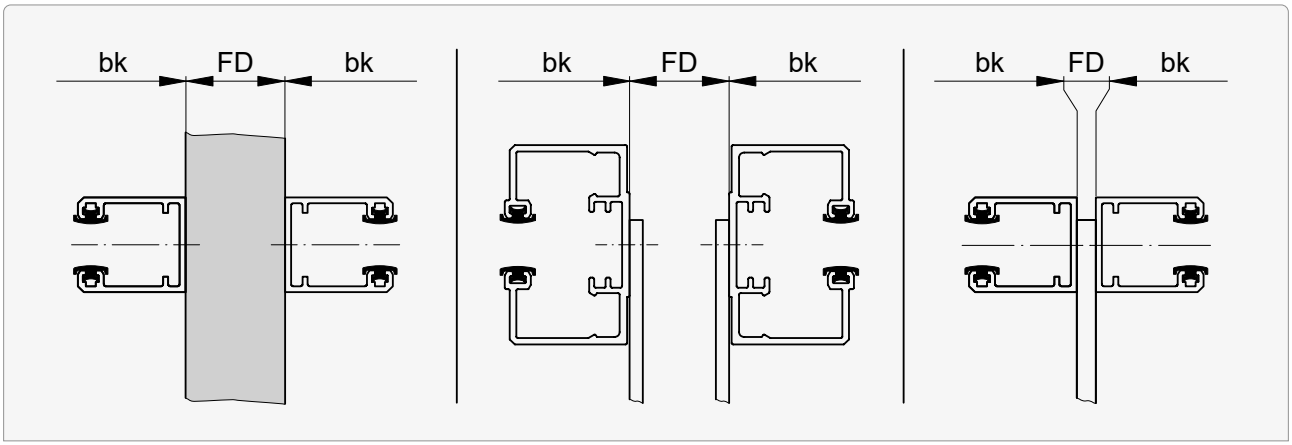

FD min.	FD max.
5	1000

Double guide

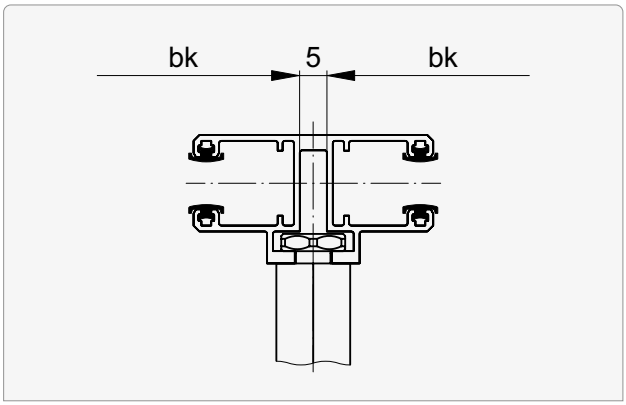

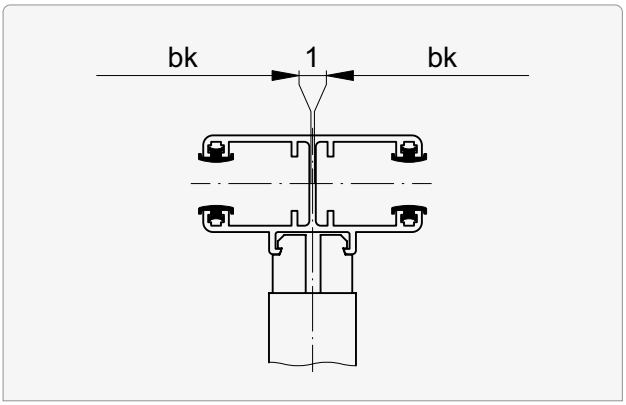

Opening for connected blinds **114**

Connected systems

Drive position

Gearbox

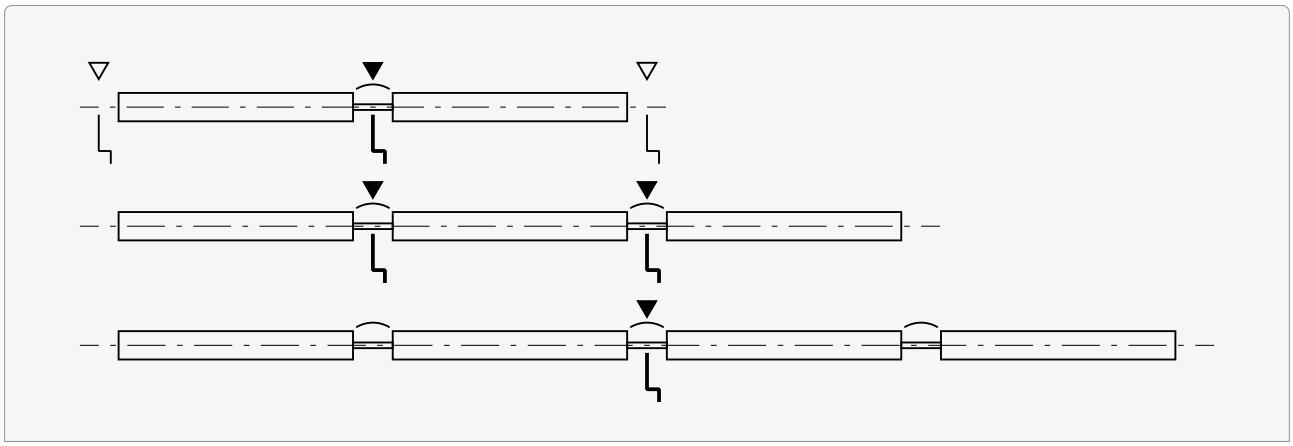

Motor

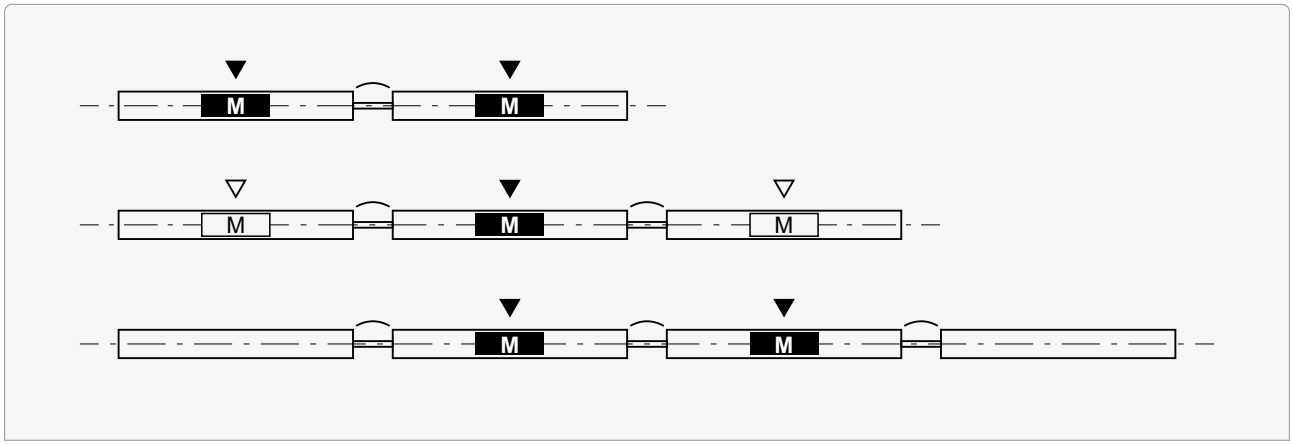

▼ Standard drive position
▽ Possible drive position

Opening for connected blinds

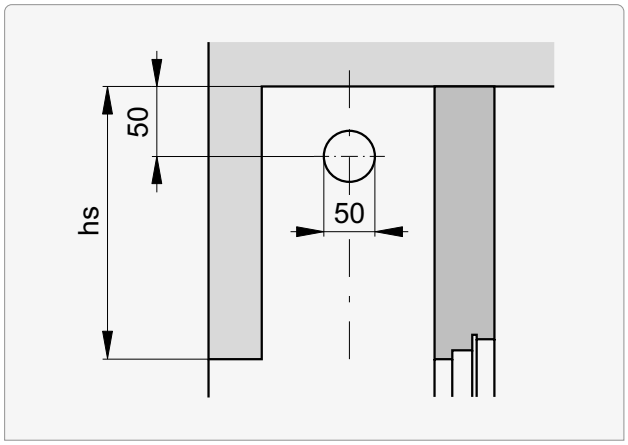

Technical data of motors

Performance characteristics

Type		Limit switch Type	Number of	M [Nm]	n [1/min.]	P [W]	I [A]
Standard							
Elero							
ES...	06.01	mechanical	2	6	26	110	0.50
	09.01			9		170	0.75
E0...	20.01			20		190	1.05
ES...	06.51	mechanical	3	6	26	110	0.50
	09.51			9		170	0.75
E0...	20.51			20		190	1.05
Option							
Somfy							
SH...	06.01	mechanical	2	6	24	95	0.40
	10.01			10		110	0.65
	18.01			18		155	1.00
SW...	06.01	electronic	2	6	24	95	0.40
SI...	10.01			10		110	0.65
SR...	18.01			18		155	1.00
Elero Comfort							
ECM...	06.01	electronic	2	6	26	115	0.50
	09.01			9		156	0.68
	06.51		3	6		115	0.50
	09.51			9		156	0.68
ECB...	06.01	electronic	2	6	26	115	0.50
	09.01			9		156	0.68
	06.51		3	6		115	0.50
	09.51			9		156	0.68

I Current consumption
M Torque
n Rotational speed
P Power consumption

Lamisol® III System

Specifications

Limit dimensions Lamisol® III System Profil **117**
Limit dimensions Lamisol® III System Box **117**

Mounting situations

Built-in System **118**
Installation system with box **119**
Header dimensions | Heights of package **120**
Slat profiles **121**
End rails **121**
Beginning distance | Slot spacing **122**
Orientation of cable outlet **123**
Guide rails **124**
Sections | Details **125**
Vertical connections | Standard motor position **127**

Fastenings

Guide rail installation (principle) **132**
Guide rail fastenings (principle) **133**
Guide extension and facet **134**
Guide rail end for window sill installation **136**
Guide rail end for suspended guide rails **136**
Fastening points Lamisol® III System Profil **137**
Fastening points Lamisol® III System Box **141**

Drive

Technical data of motors **145**

Limit dimensions Lamisol® III System Profil

Single blind

Operation	Width min. (bk)	Width[1] max. (bk)	Height min. (hl)	Height max. (hl)	Surface max. [m²]
Motor drive	600[2] 500[3]	4500[2] 4550[3]	400[2] 380[3]	4300[2] 5000[3]	10

Limit dimensions Lamisol® III System Box

Single blind

Operation	Width min. (bk)	Width[1] max. (bk)	Height min. (gh)	Height max. (gh)	Surface max. [m²]
Motor drive	600[2] 500[3]	4000	590	4700 4379[2] 4344[3]	10

[1] For buildings and high-rise structures, which are exposed to high winds, this maximum value should be decreased as required. Also see wind classes data sheet.

[2] Lamisol® III 70 System

[3] Lamisol® III 90 System

Definitions of dimensions 327

Built-in System

Vertical section: Lamisol® III 70 System Profil

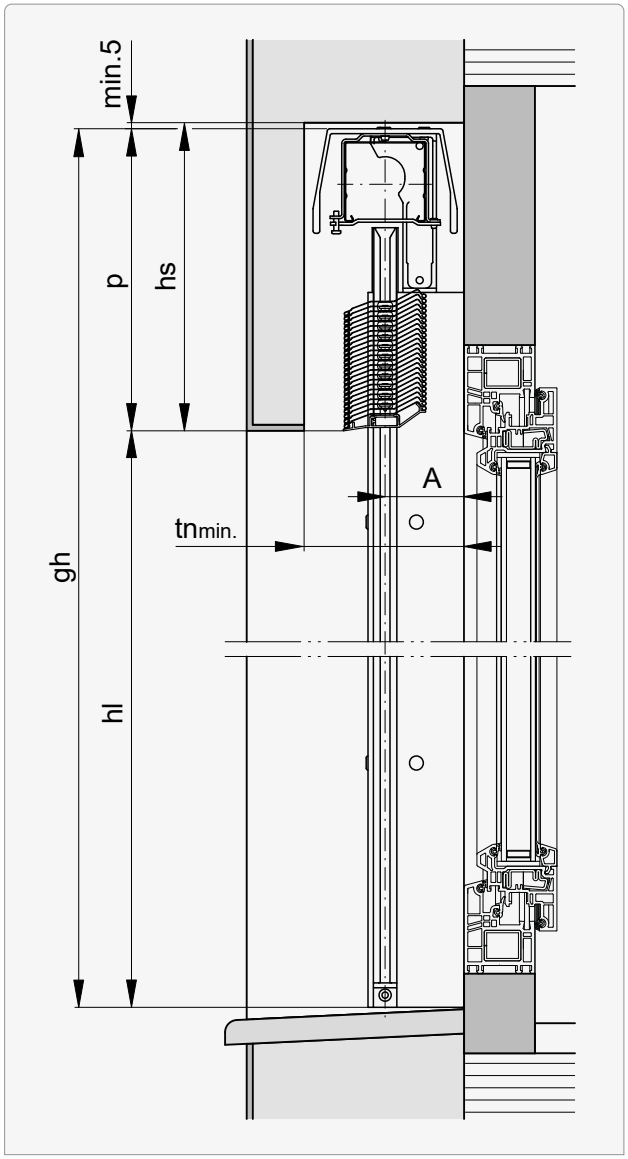

Vertical section: Lamisol® III 90 System Profil

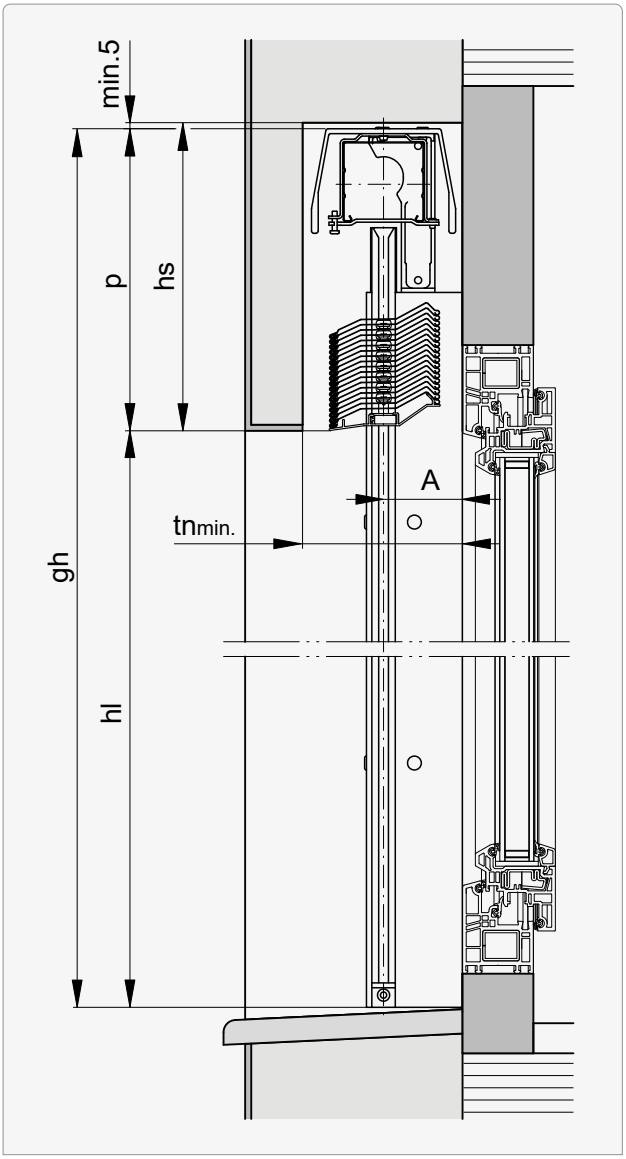

Horizontal section: Lamisol® III 70 System Profil

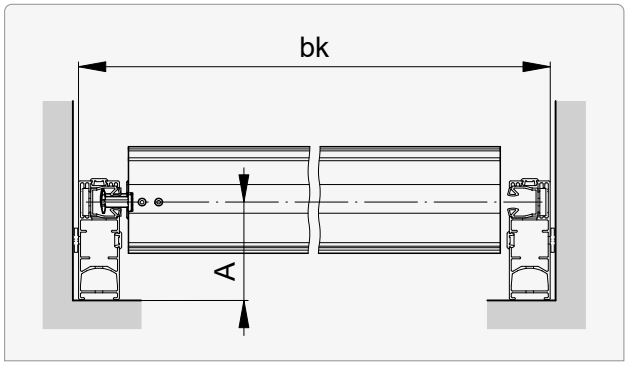

Horizontal section: Lamisol® III 90 System Profil

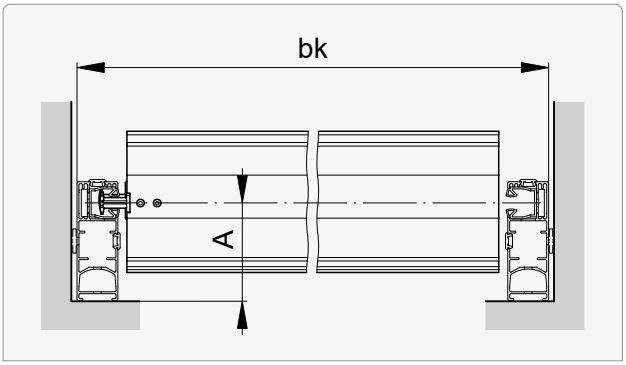

Sections | Details 125

Values for **A** and **tn** 120

Installation system with box

Horizontal section: Lamisol® III 70 System Box

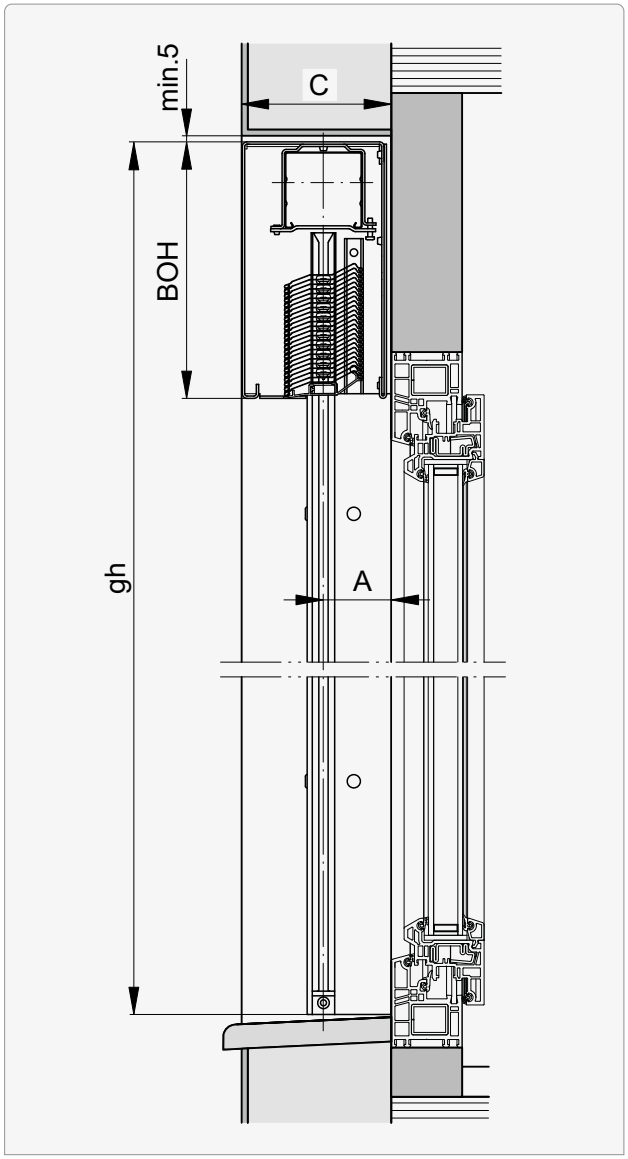

Box with slat package covered

Vertical section: Lamisol® III 90 System Box

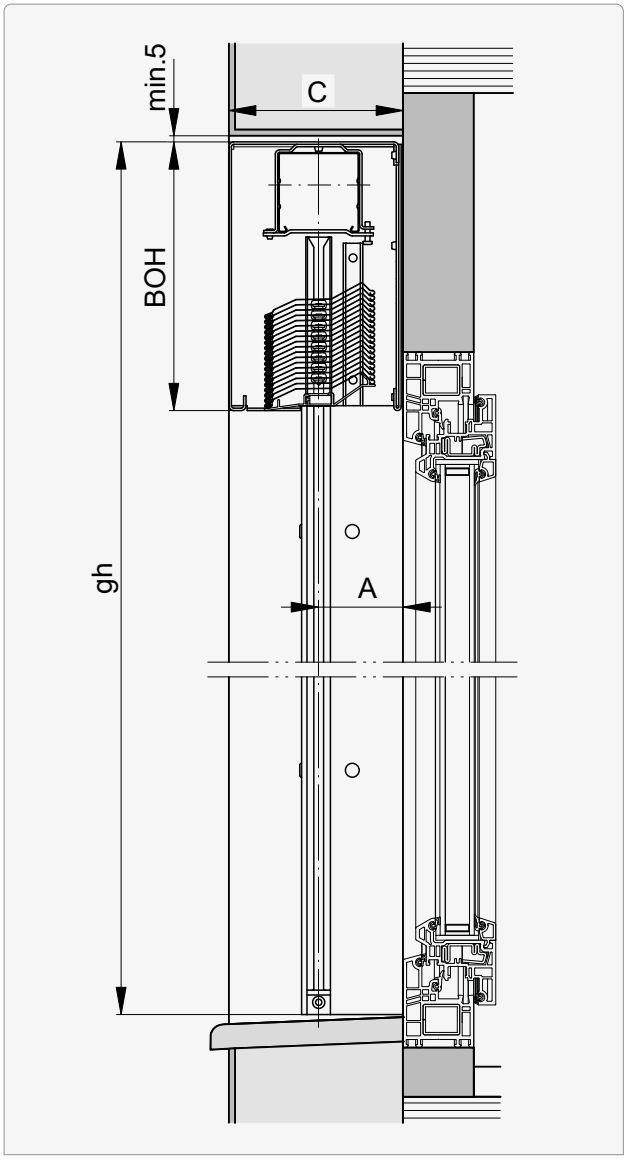

Box with slat package covered

Vertical section: Lamisol® III 70 System Box

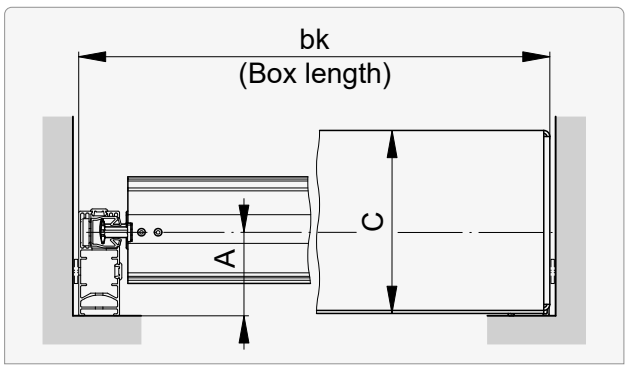

Horizontal section: Lamisol® III 90 System Box

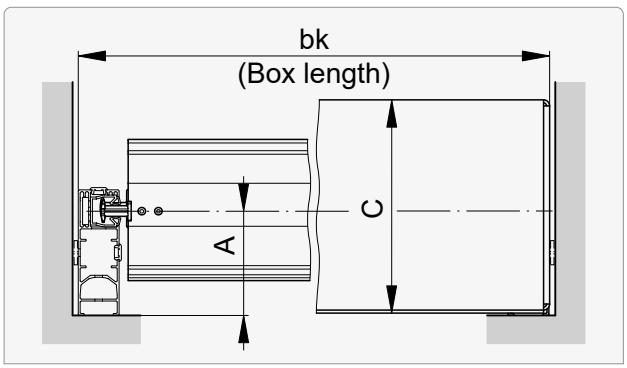

Sections | Details **125**

Values for **A**, **BOH** and **C** **120**

Header dimensions | Heights of package

Lamisol® III 70 System Profil

hl →I	P min.	hs	hl →I	P min.	hs
1750	230	235	**3250**	330	335
2000	245	250	**3500**	345	350
2250	260	265	**3750**	360	365
2500	280	285	**4000**	380	385
2750	295	300	**4250**	395	400
3000	310	315	**4300**	415	420

tn min.	A
130*	64.5

Lamisol® III 90 System Profil

hl →I	P min.	hs	hl →I	P min.	hs
1750	220	225	**3250**	300	305
2000	230	235	**3500**	315	320
2250	240	250	**3750**	325	330
2500	255	260	**4000**	345	350
2750	270	275	**4250**	355	360
3000	285	290	**4300**	370	375

tn min.	A
130*	64.5

Lamisol® III 70 System Box

gh →I	P	BOH	C	A
1440	188	190		
1920	218	220		
2510	258	260	121	55.5
3200	298	300		
4700		300[1]		

Lamisol® III 90 System Box

gh →I	P	BOH	C	A
2120	218	220		
2860	258	260	141	69
3650	298	300		
4660		300[1]		

[1] Slat package not covered (package projection)

* + possible addition for protruding weatherboard or doorknobs.

Header dimensions are approximate values which may exhibit **negative or positive deviations** depending on the technical circumstances. **A dimensional tolerance of ±5 mm** is observed for the header height.

Slat profiles

Lamisol® III 70 System

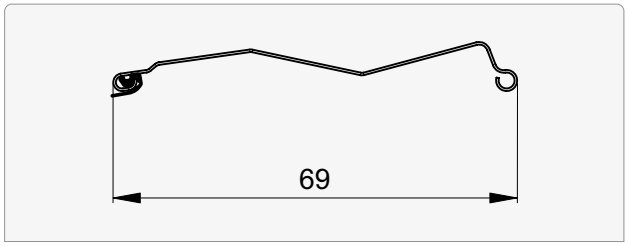

Lamisol® III 90 System

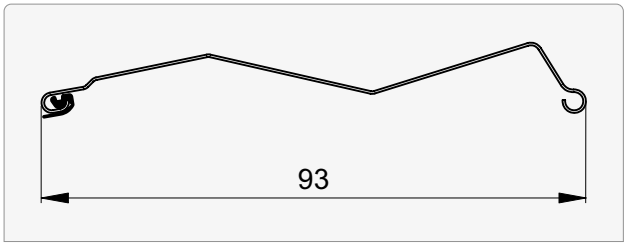

End rails

Lamisol® III 70 System

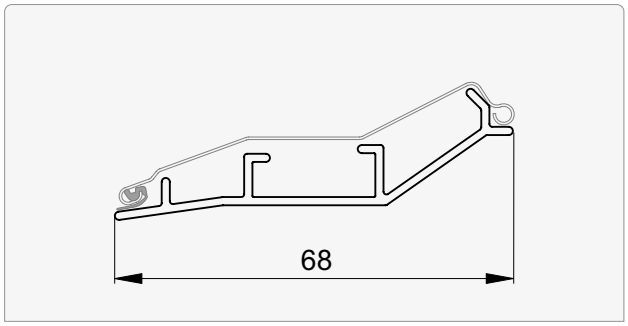

Lamisol® III 90 System

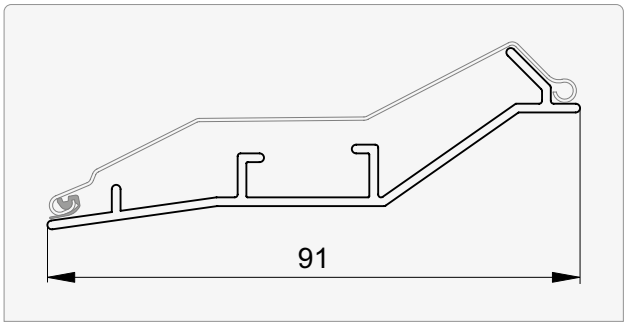

Beginning distance | Slot spacing

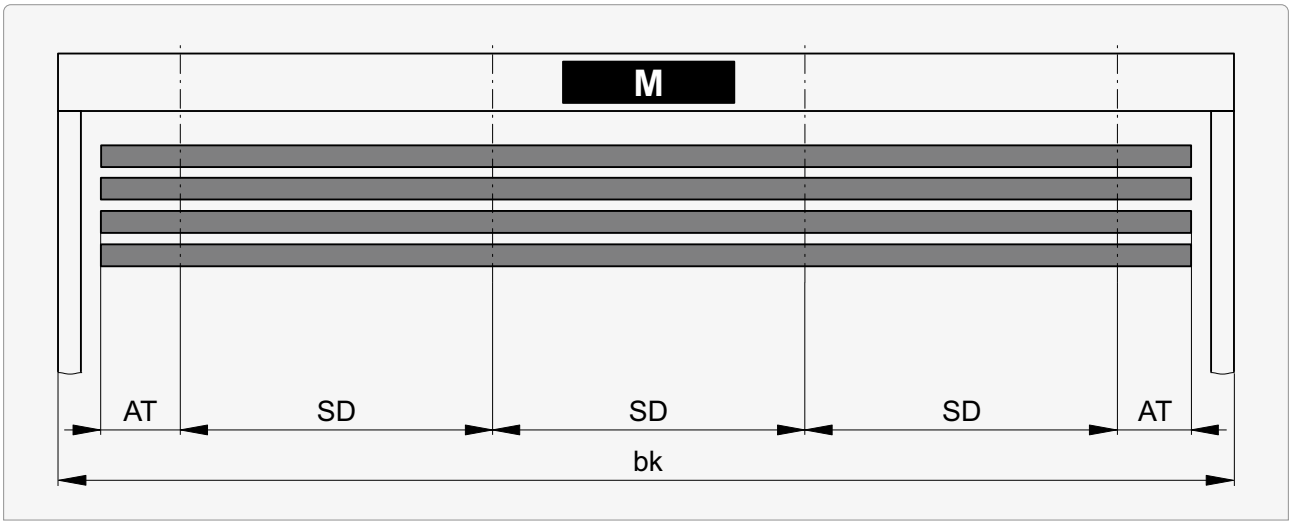

bk	AT min.	SD min.	SD max.
≤610	50	350*	1000*
611...1250	100		
>1250	200		
Special	250		

* Standard slot spacing machine fabrication

Deviations from the standard are posible when:

Deviation	Correction
Support loading too high	AS
Slot spacing < 350	AT + AS
With motor	AT + AS

AT Beginning distance
Distance from beginning of slat to centre of bearing

SD Slot spacing
Distance from centre of bearing (slot) to centre of bearing (slot)

Orientation of cable outlet

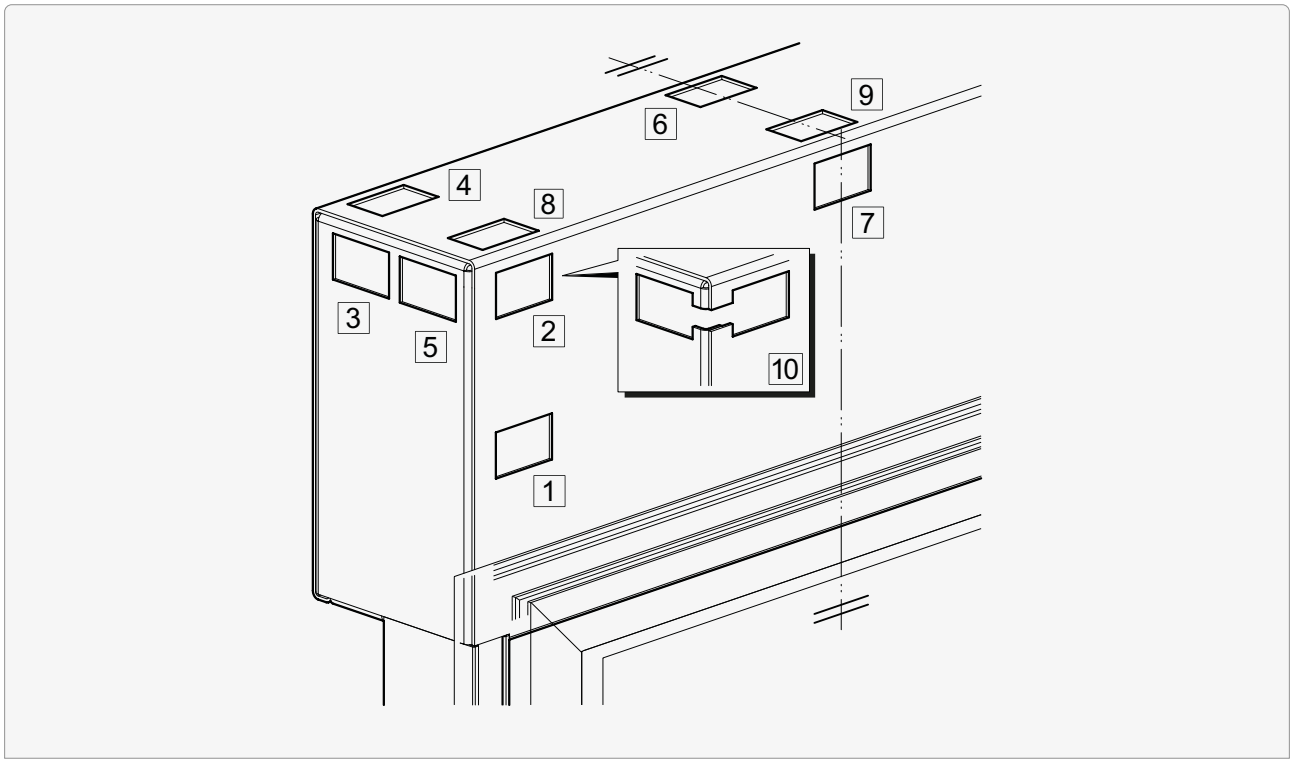

Lamisol® III 70 System

Position	Cable outlet Type									
	1	**2**	**3**	**4**	**5**	**6**	**7**	**8**	**9**	**10**
left	01L	02L*	03L	04L	05L	–	–	08L*	–	10L
centre	–	–	–	–	–	06M	07M*	–	09M*	–
right	01R	02R*	03R	04R	05R	–	–	08R*	–	10R

Lamisol® III 90 System

Position	Cable outlet Type									
	1	**2**	**3**	**4**	**5**	**6**	**7**	**8**	**9**	**10**
left	01L	02L*	03L	04L	05L	–	–	08L	–	10L
centre	–	–	–	–	–	06M	07M*	–	09M	–
right	01R	02R*	03R	04R	05R	–	–	08R	–	10R

***The plug cannot be passed through when assembled!**

Guide rails

Type P | Lamisol® III System Profil

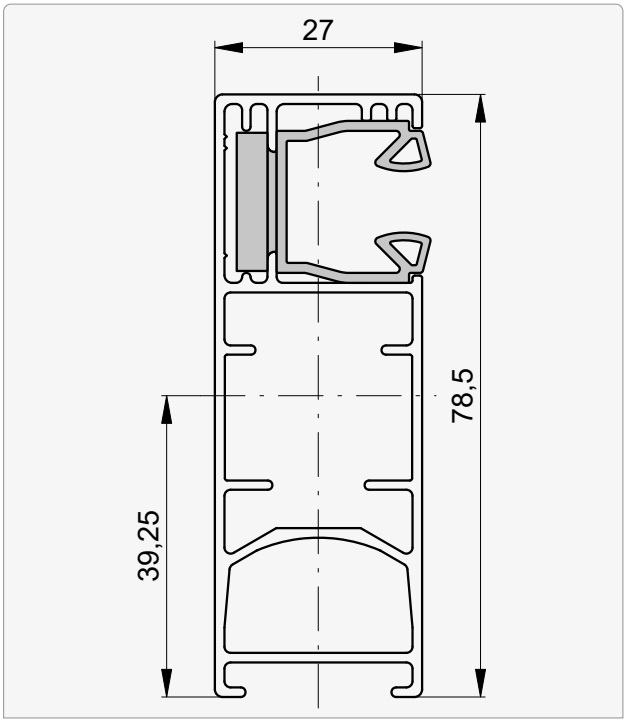

Type K | Lamisol® III 70 System Box

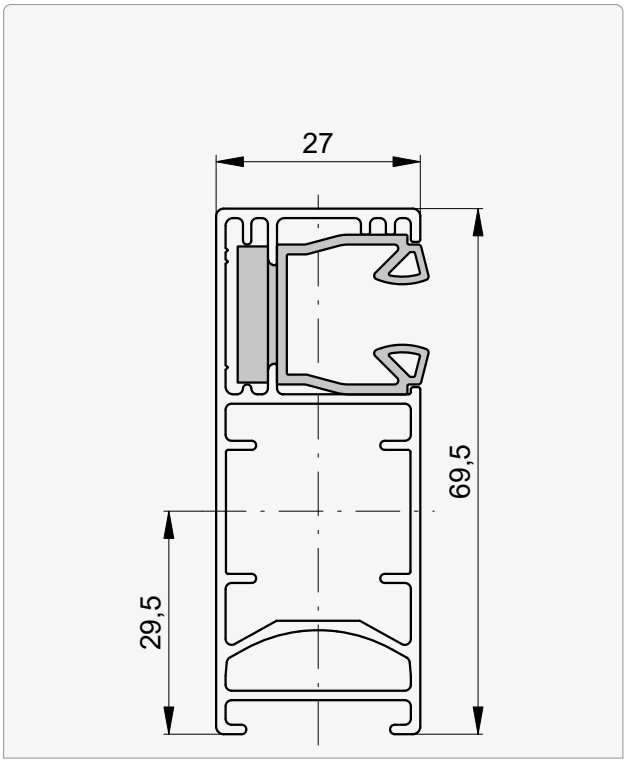

Type B | Lamisol® III 90 System Box

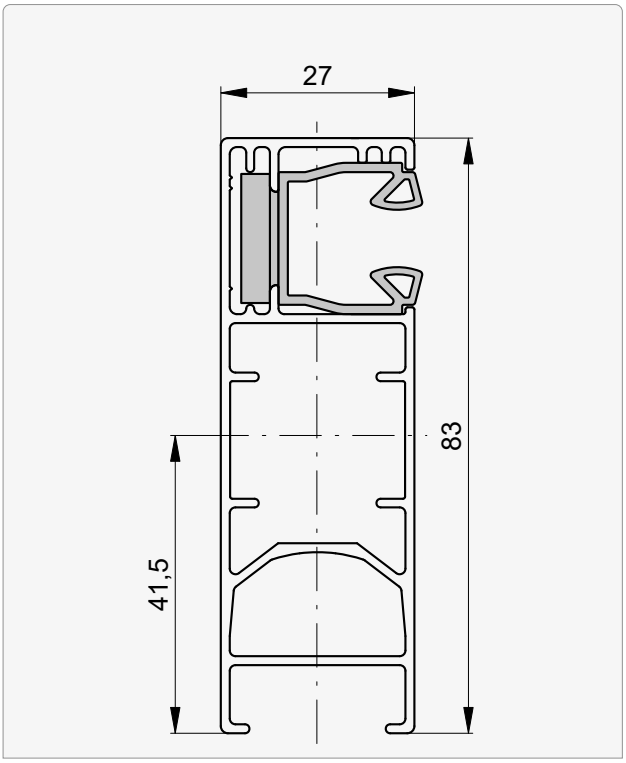

Fastening points ..... 137 | 141
Guide extension and facet 134
Guide rail fastenings 133

Sections | Details

Horizontal section: Lamisol® III 70 System Profil

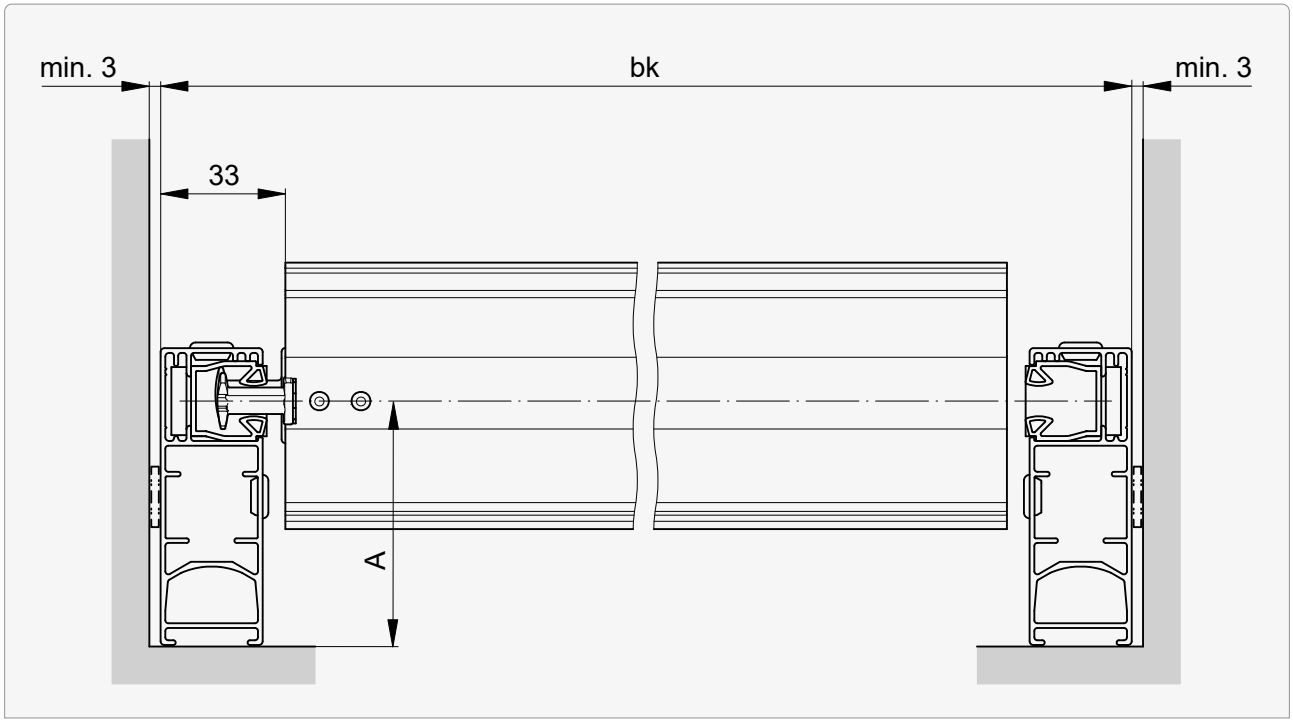

Horizontal section: Lamisol® III 90 System Profil

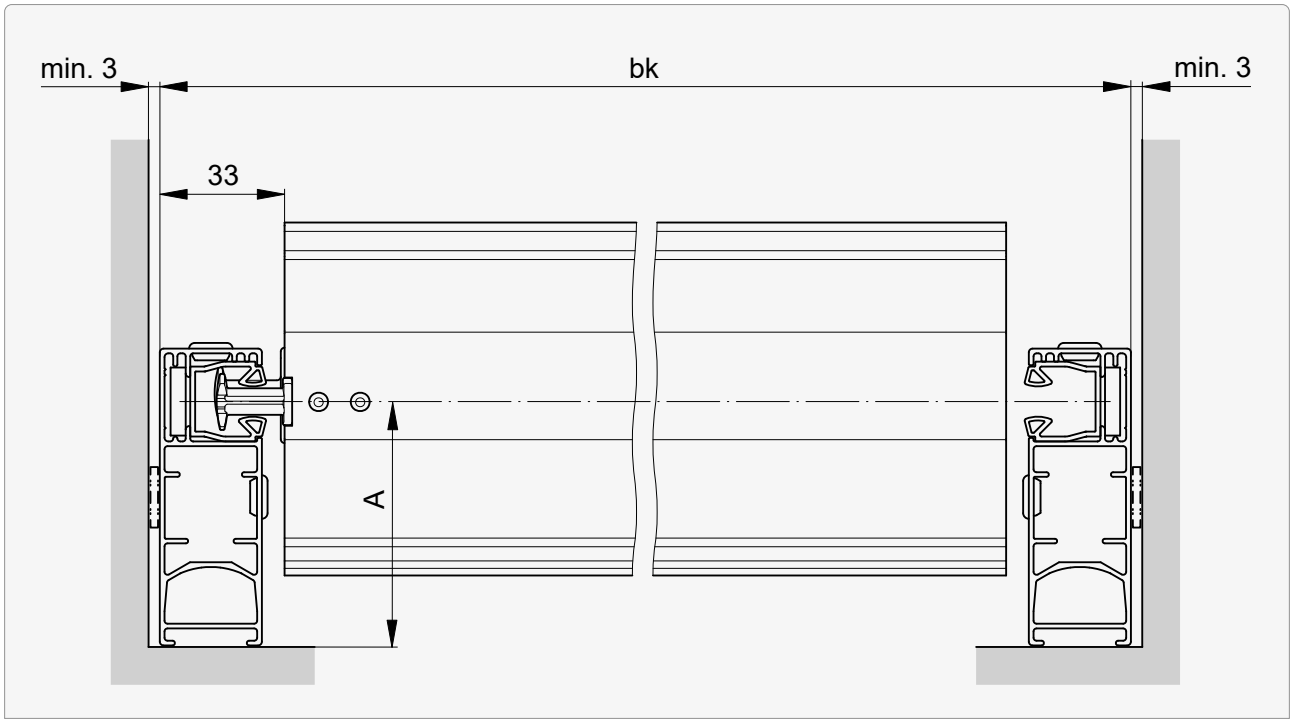

Value for **A**.....**120**

Sections | Details

Horizontal section: Lamisol® III 70 System Box

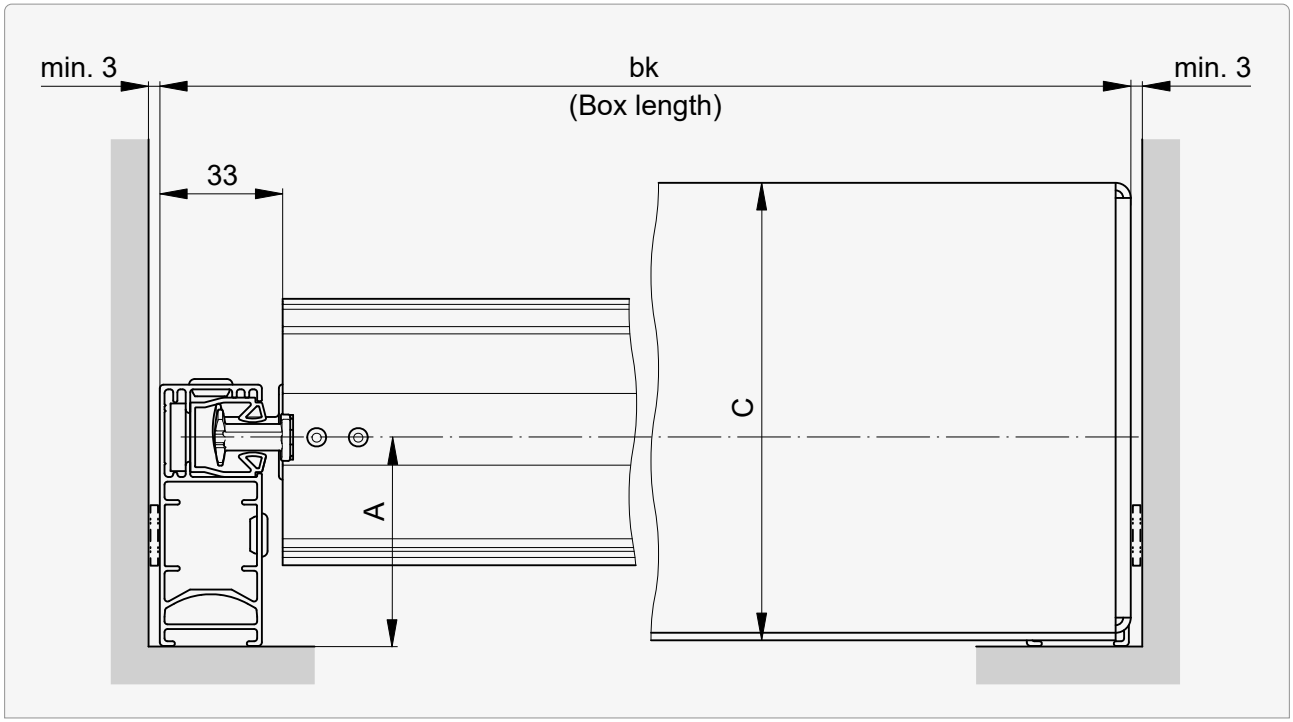

Horizontal section: Lamisol® III 90 System Box

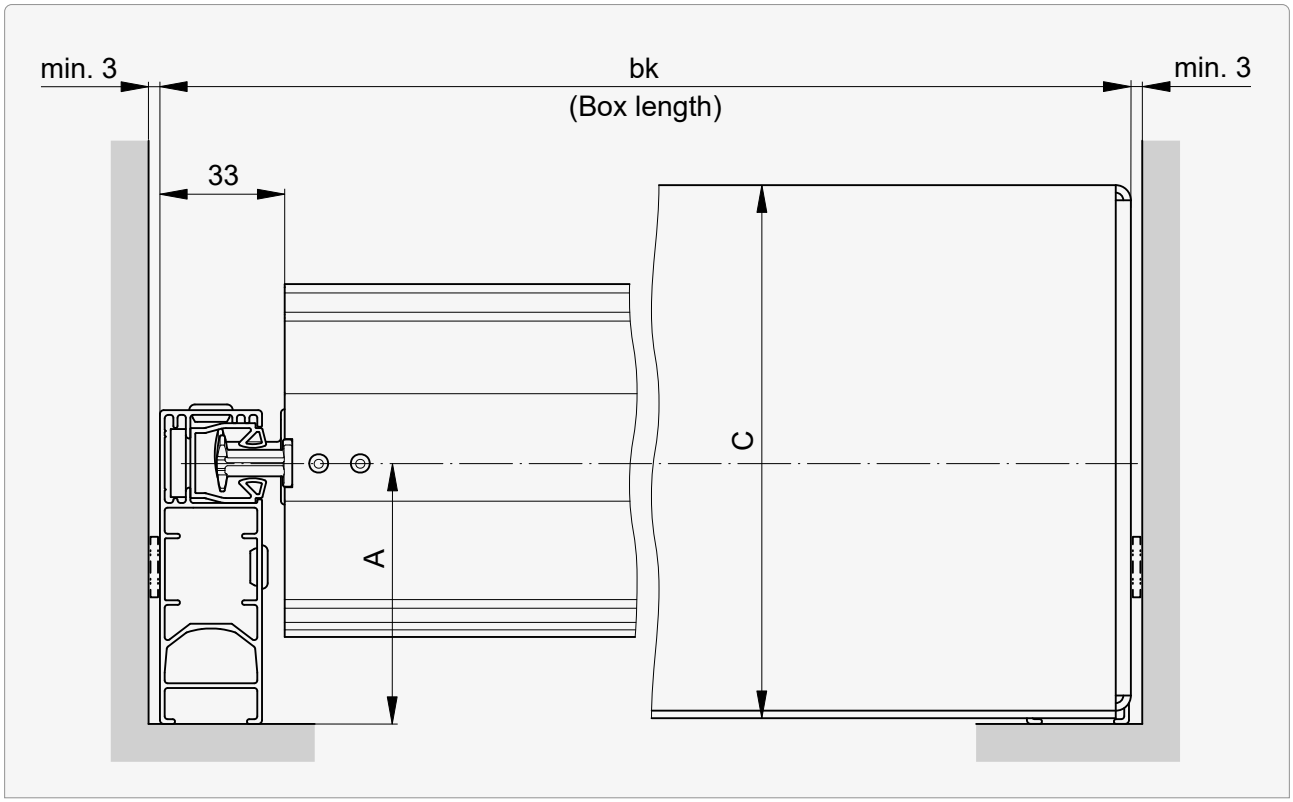

Values for **A** and **C** **120**

Vertical connections | Standard motor position

Number of bearings

Lamisol® III 70 System

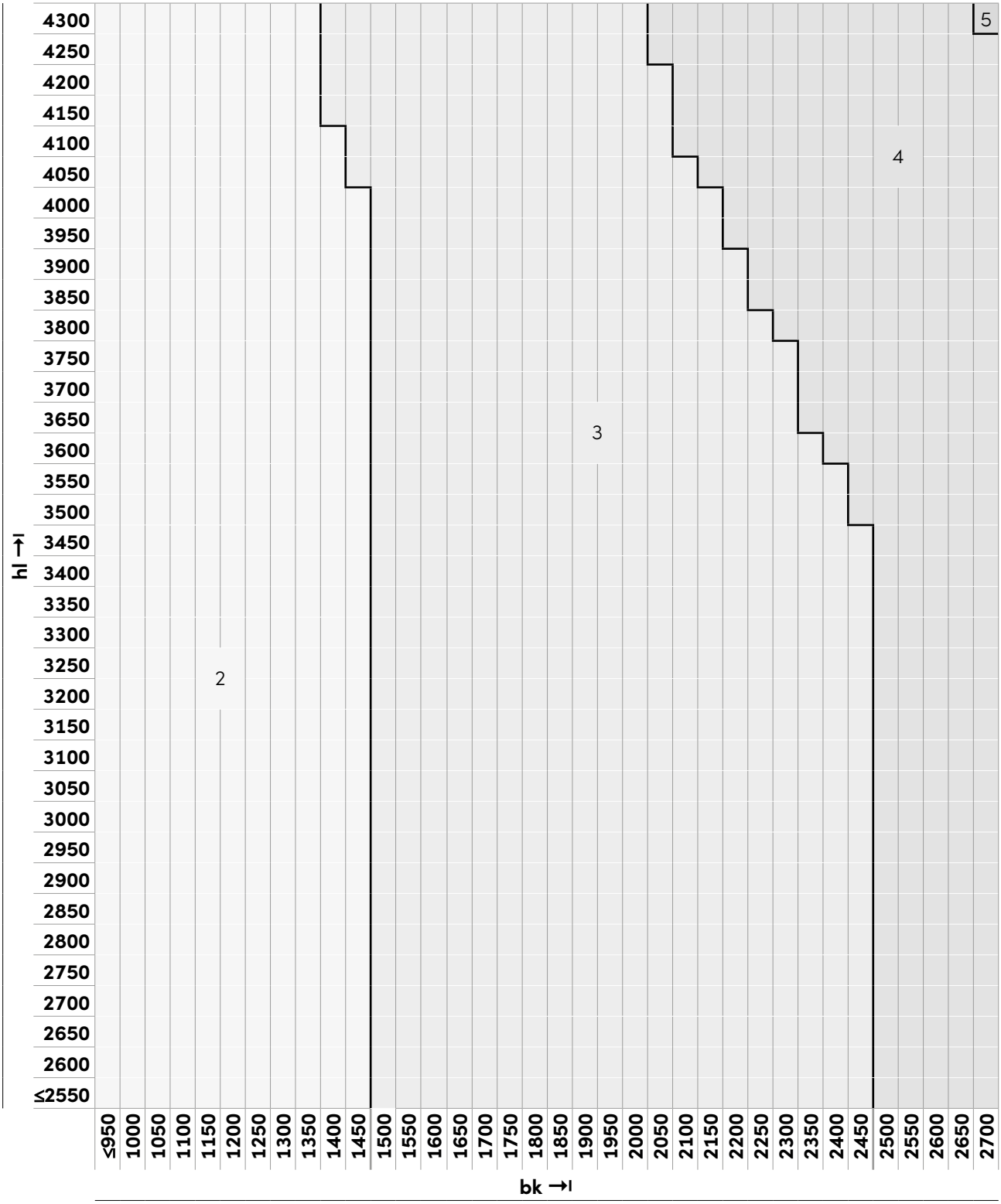

Standard motor position 131

Vertical connections | Standard motor position

Number of bearings

Lamisol® III 70 System

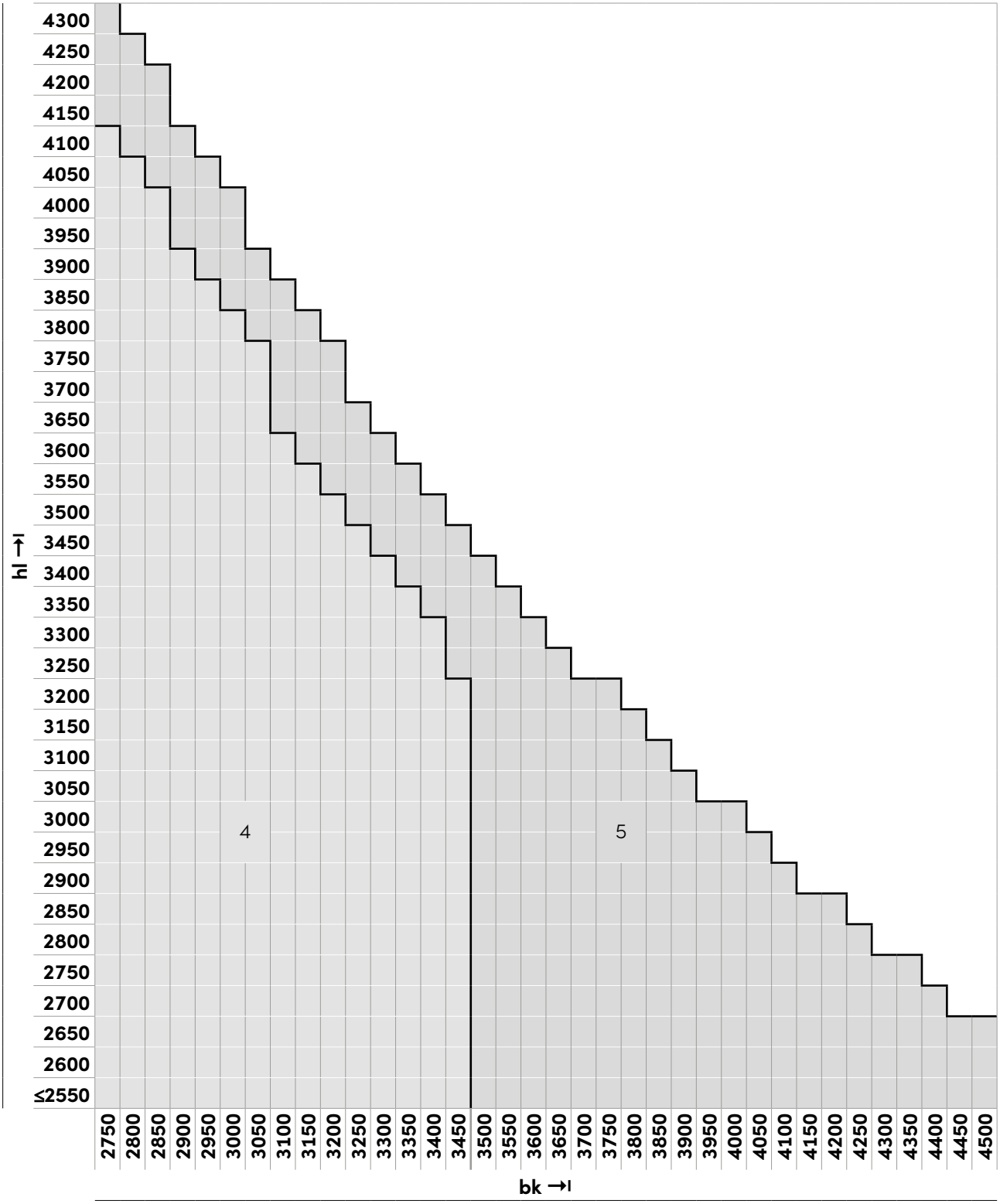

Vertical connections | Standard motor position

Number of bearings

Lamisol® III 90 System

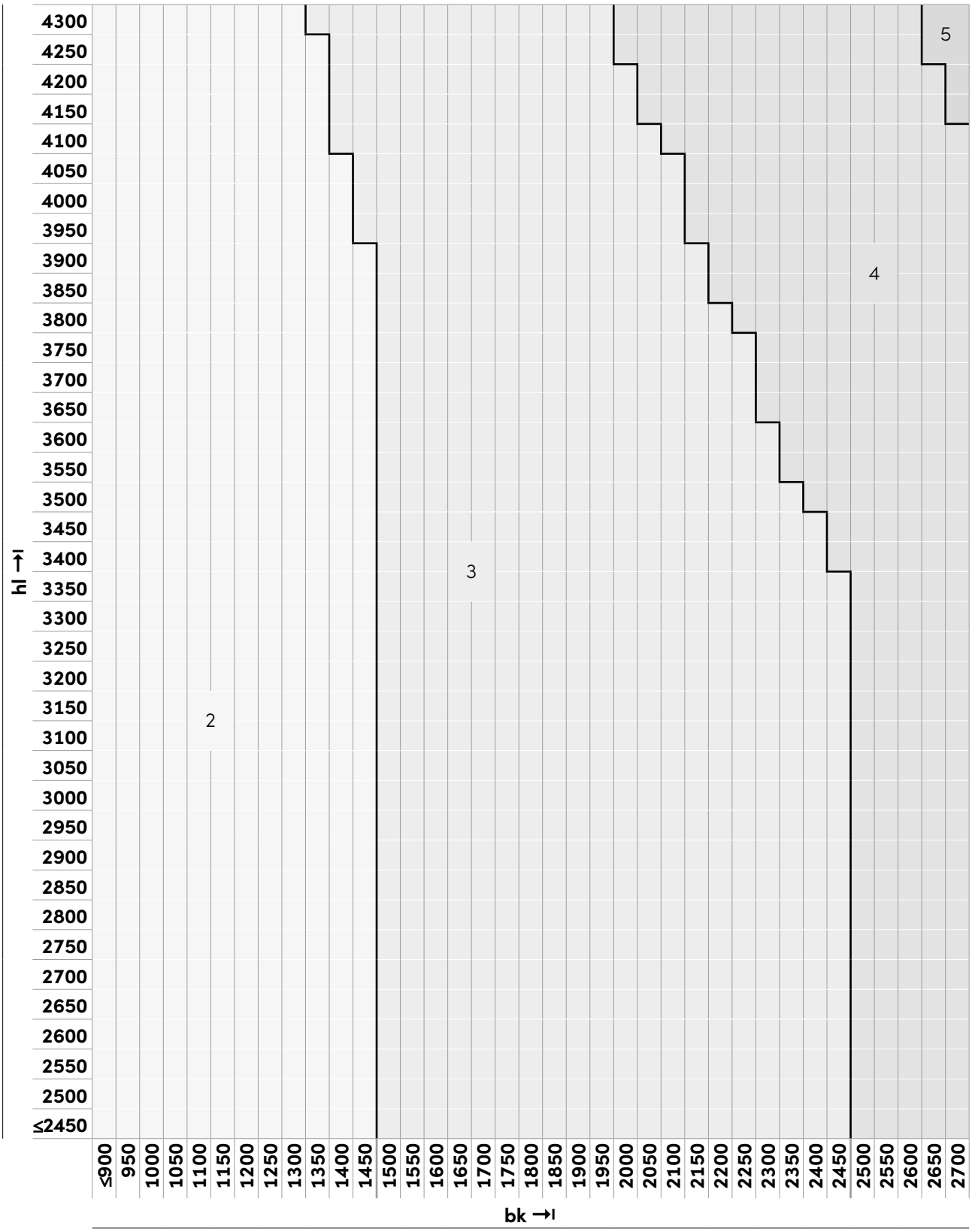

Standard motor position 131

Vertical connections | Standard motor position

Number of bearings

Lamisol® III 90 System

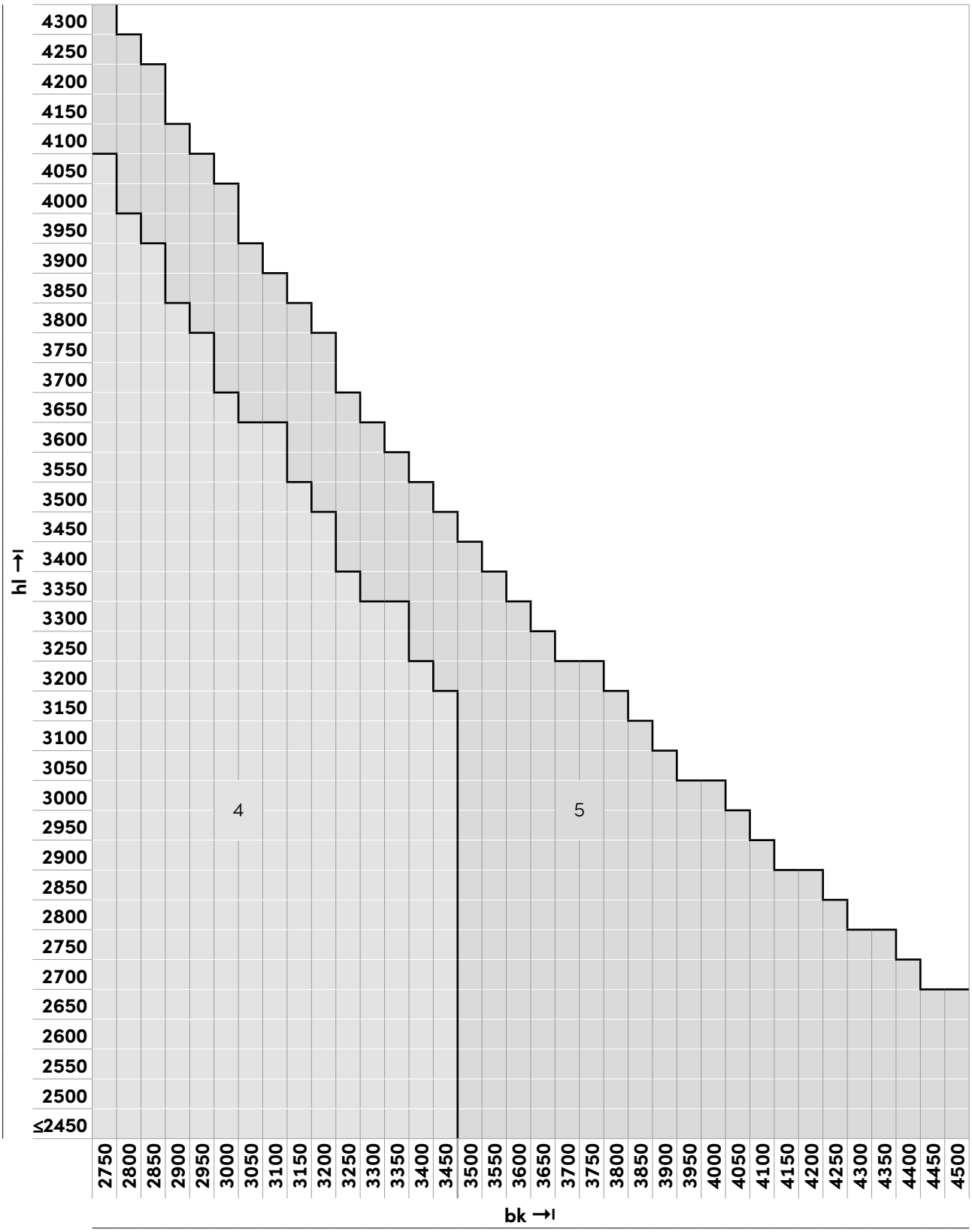

Vertical connections | Standard motor position

Standard motor position

Number of bearings	Standard motor position
2	
3	
4	
5	

Bearing

M Standard motor position

Guide rail installation (principle)

Guides attached (to soffit) | Type A

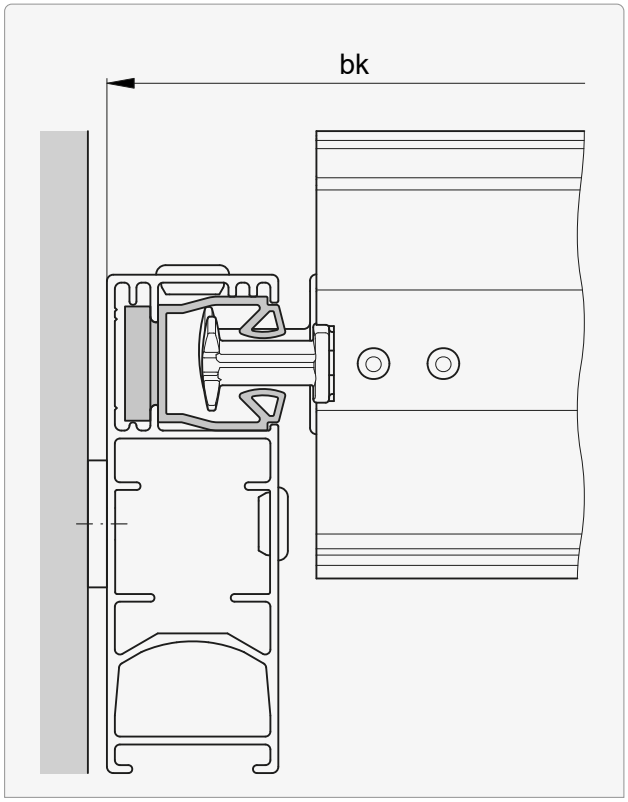

Observe possible guide rail spacer for **bk**.
Standard: 3 mm

Guide rail fastenings (principle)

Transverse and holding force per fastening point at least 3300 N.

Overview

Type														
A	B	Bd	C	Cd	E	F	G	H	Kv	M	T	Tv	V	Wv
●	–	–	–	–	–	–	●	–	–	–	–	–	–	–

● applicable without restrictions

A Soffit installation

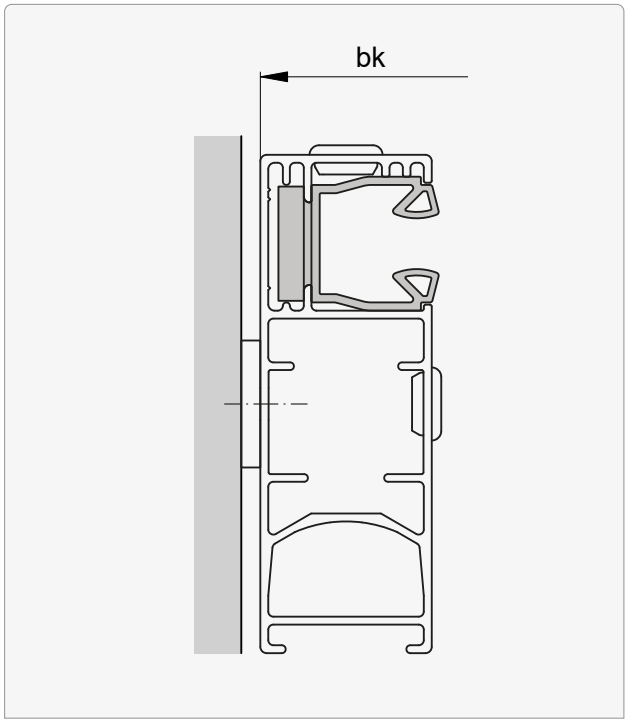

G Facade installation

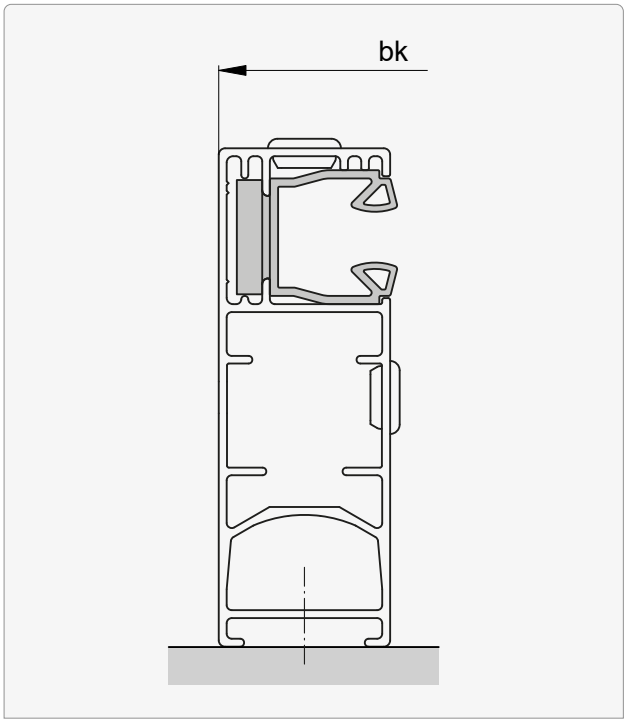

Observe possible guide rail spacer for **bk**.
Standard: 3 mm

Guide extension and facet

Extension

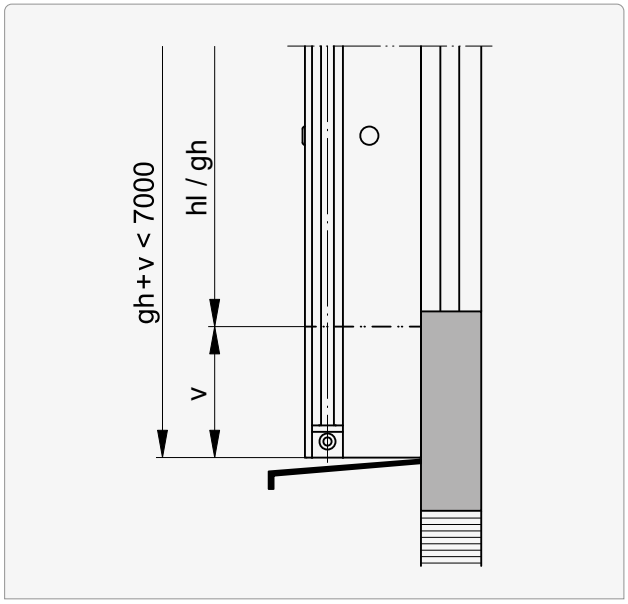

v
–20 ... 1000

Facet

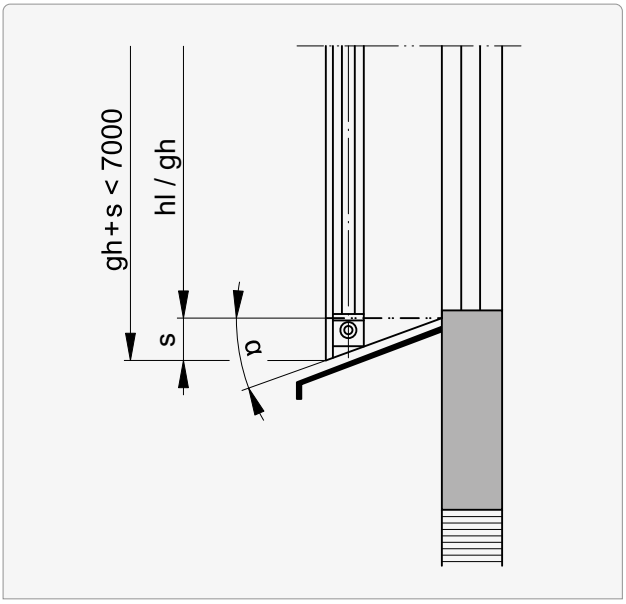

α
5 ... 50°

Extension and facet

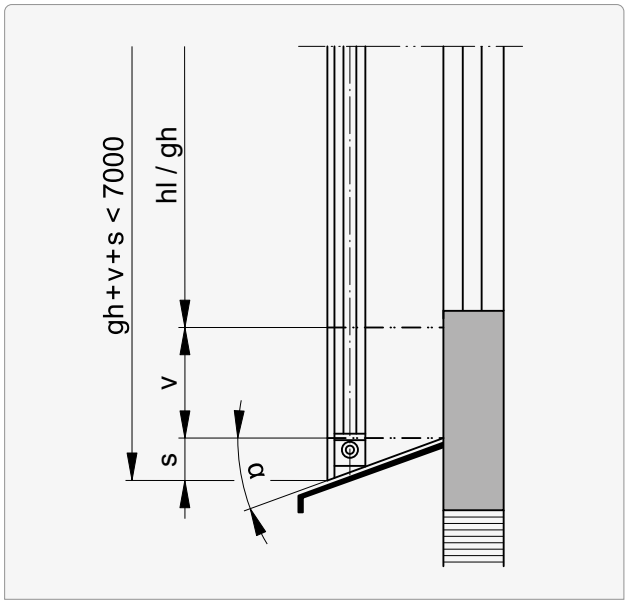

v	α
0 ... 1000	5 ... 50°

Value for **s** **135**

Angling at the guides

Type P | Lamisol® III System Profil

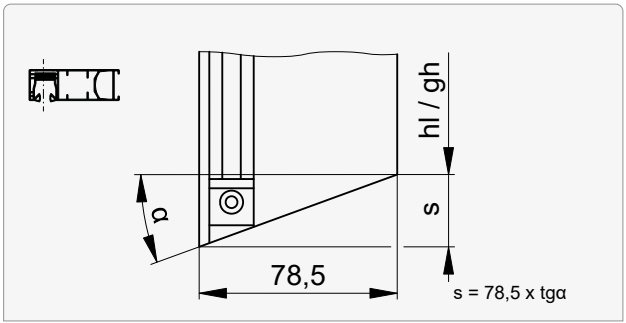

α	s	α	s	α	s	α	s	α	s
5	7	**15**	21	**25**	37	**35**	55	**45**	79
6	8	**16**	23	**26**	38	**36**	57	**46**	81
7	10	**17**	24	**27**	40	**37**	59	**47**	84
8	11	**18**	26	**28**	42	**38**	61	**48**	87
9	12	**19**	27	**29**	44	**39**	64	**49**	90
10	14	**20**	29	**30**	45	**40**	66	**50**	94
11	15	**21**	30	**31**	47	**41**	68		
12	17	**22**	32	**32**	49	**42**	71		
13	18	**23**	33	**33**	51	**43**	73		
14	20	**24**	35	**34**	53	**44**	76		

Type K | Lamisol® III 70 System Box

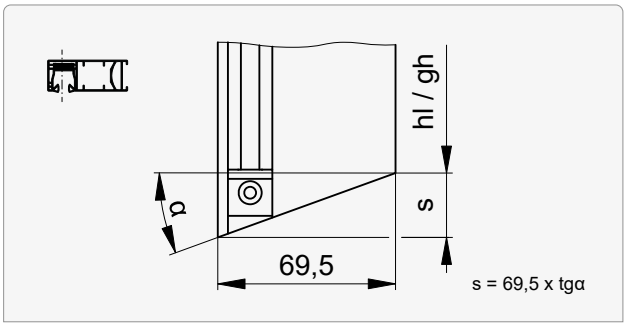

α	s	α	s	α	s	α	s	α	s
5	6	**15**	19	**25**	32	**35**	49	**45**	70
6	7	**16**	20	**26**	34	**36**	50	**46**	72
7	9	**17**	21	**27**	35	**37**	52	**47**	75
8	10	**18**	23	**28**	37	**38**	54	**48**	77
9	11	**19**	24	**29**	39	**39**	56	**49**	80
10	12	**20**	25	**30**	40	**40**	58	**50**	83
11	14	**21**	27	**31**	42	**41**	60		
12	15	**22**	28	**32**	43	**42**	63		
13	16	**23**	30	**33**	45	**43**	65		
14	17	**24**	31	**34**	47	**44**	67		

Type B | Lamisol® III 90 System Box

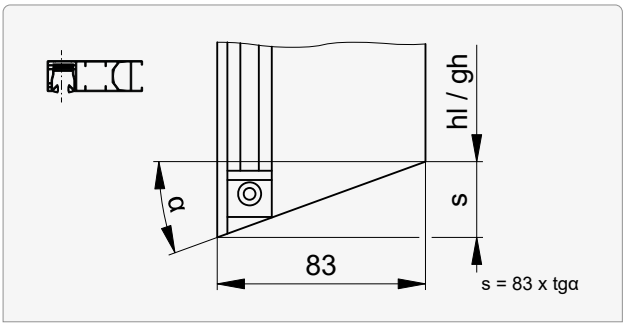

α	s	α	s	α	s	α	s	α	s
5	7	**15**	22	**25**	39	**35**	58	**45**	83
6	9	**16**	24	**26**	40	**36**	60	**46**	86
7	10	**17**	25	**27**	42	**37**	63	**47**	89
8	12	**18**	27	**28**	44	**38**	65	**48**	92
9	13	**19**	29	**29**	46	**39**	67	**49**	95
10	15	**20**	30	**30**	48	**40**	70	**50**	99
11	16	**21**	32	**31**	50	**41**	72		
12	18	**22**	34	**32**	52	**42**	75		
13	19	**23**	35	**33**	54	**43**	77		
14	21	**24**	37	**34**	56	**44**	80		

Guide rail end for window sill installation

FA Guide end

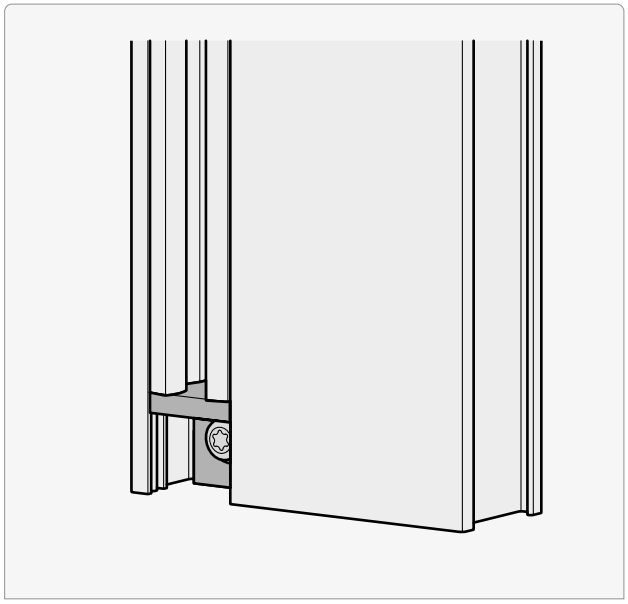

Guide type		
B	**K**	**P**
●	●	●

Guide rail end for suspended guide rails

SFA Safety guide end

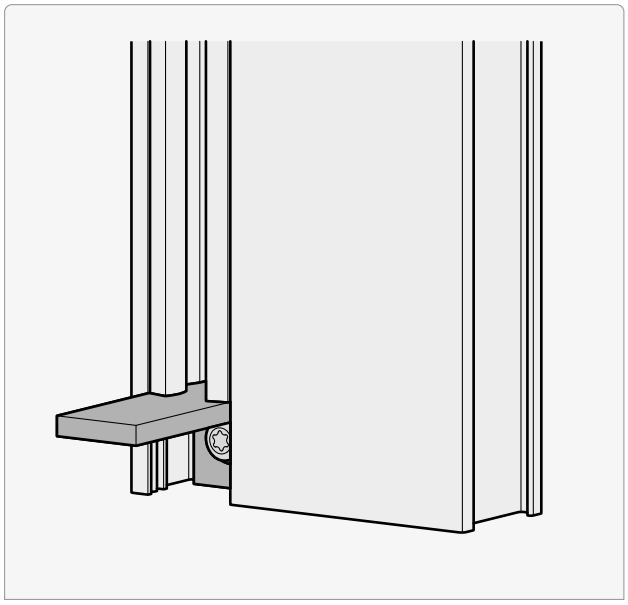

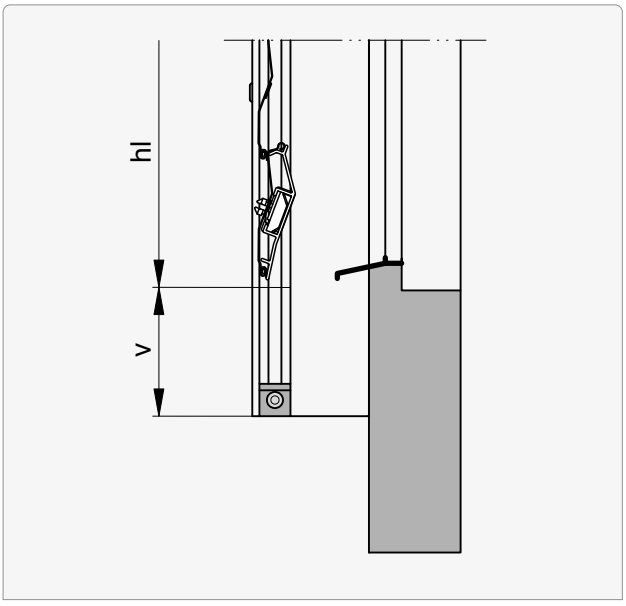

Guide type		
B	**K**	**P**
●	●	●

v
≥ 25

Fastening points Lamisol® III System Profil

Transverse and holding force per fastening point at least 700 N.

Without guide rail extension

hl	**AS** min.
≤ 1500	2
1501 ... 2700	3
2701 ... 3900	4
3901 ... 5100	5
> 5100	6

Regular

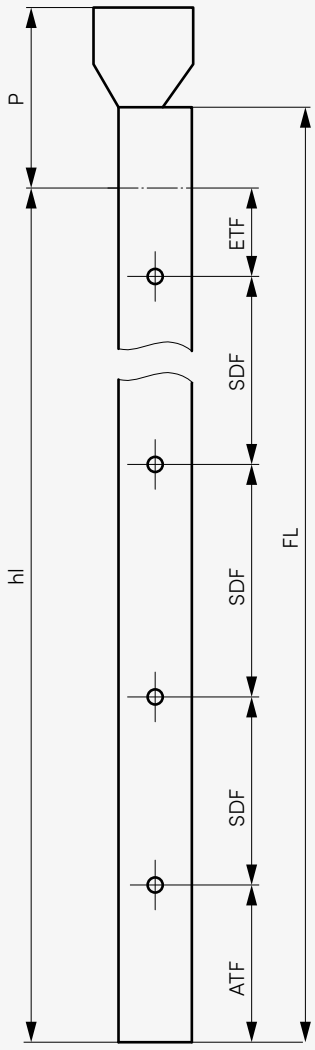

Irregular

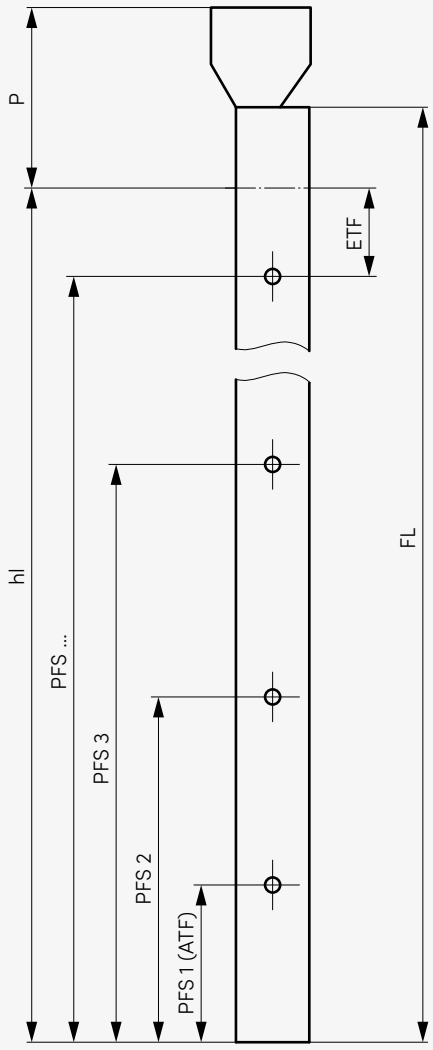

AS Number of slits
ATF Initial spacing guide rail (standard 200)
ETF Endspacing guide rail (standard 100)
FL Guide length
PFS Slot position
SDF Slot distance guide rail: 100 ... 1200

Guide rail fastenings **133**

Fastening points Lamisol® III System Profil

Transverse and holding force per fastening point at least 700 N.

With guide rail extension

Z	AS min.
≤1500	2
1501 ... 2700	3
2701 ... 3900	4
3901 ... 5100	5
>5100	6

Regular

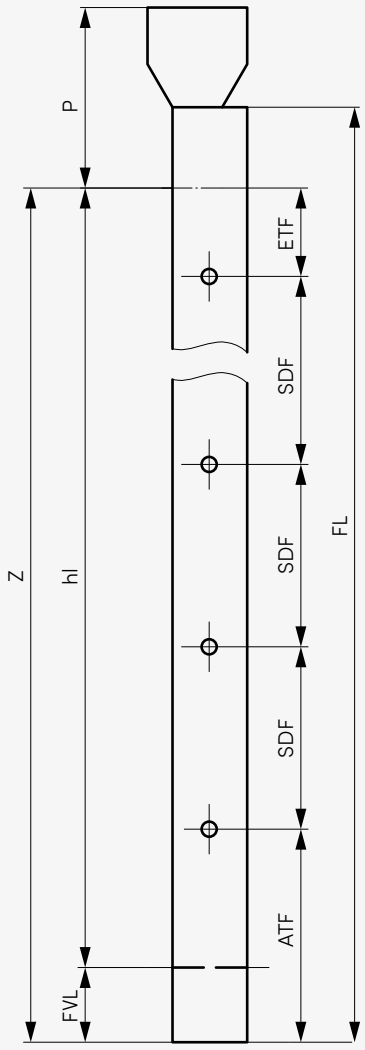

Irregular

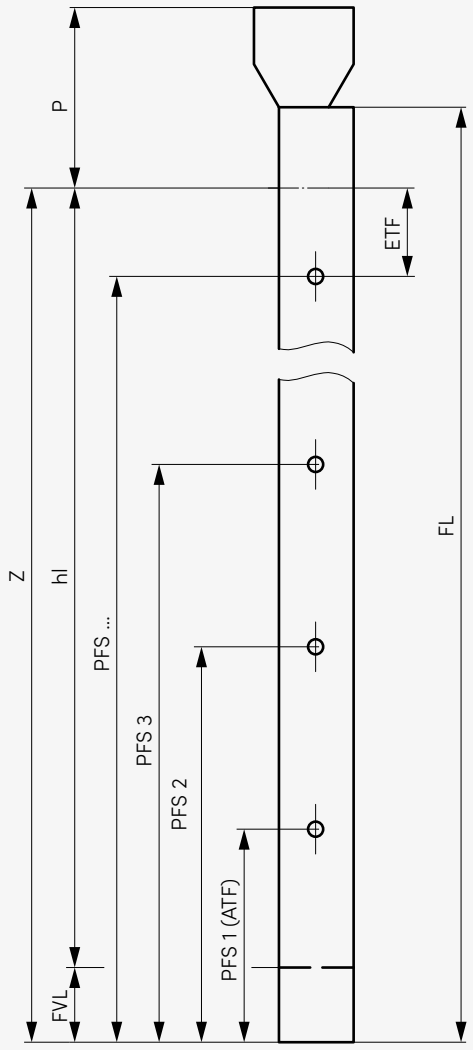

AS Number of slits
ATF Initial spacing guide rail (standard 200)
ETF Endspacing guide rail (standard 100)
FL Guide length
FVL Guide rail extension
PFS Slot position
SDF Slot distance guide rail: 100 ... 1200

Guide extension and facet 134
Guide rail fastenings 133

Fastening points Lamisol® III System Profil

Transverse and holding force per fastening point at least 700 N.

Without guide rail extension, with facet

Z	AS min.
≤ 1500	2
1501 ... 2700	3
2701 ... 3900	4
3901 ... 5100	5
> 5100	6

Regular

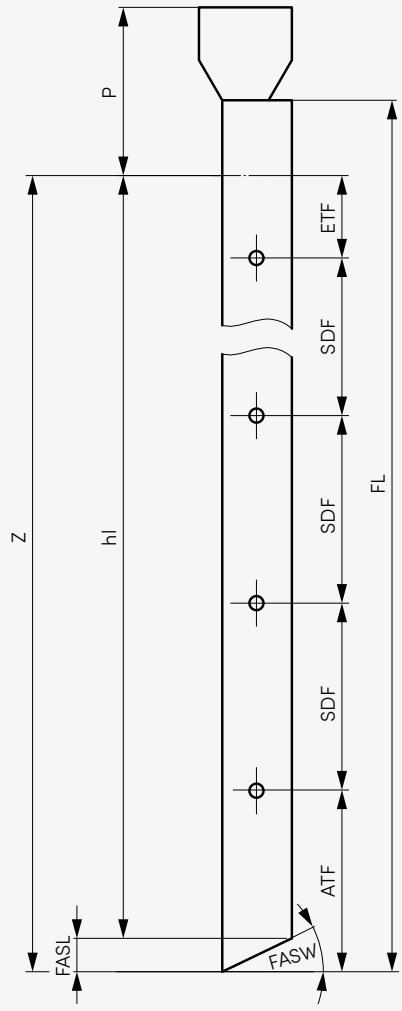

Irregular

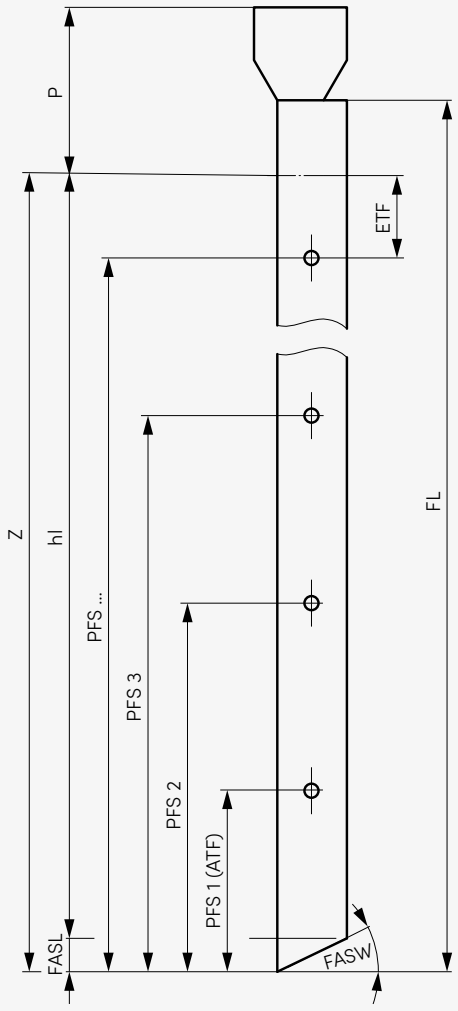

AS Number of slits
ATF Initial spacing guide rail (standard 200)
ETF Endspacing guide rail (standard 100)
FASL Guide rail facet length
FASW Guide rail facet angle
FL Guide length
PFS Slot position
SDF Slot distance guide rail: 100 ... 1200

Guide extension and facet 134
Guide rail fastenings 133

Fastening points Lamisol® III System Profil

Transverse and holding force per fastening point at least 700 N.

With guide rail extension and facet

Z	AS min.
≤ 1500	2
1501 ... 2700	3
2701 ... 3900	4
3901 ... 5100	5
> 5100	6

Regular

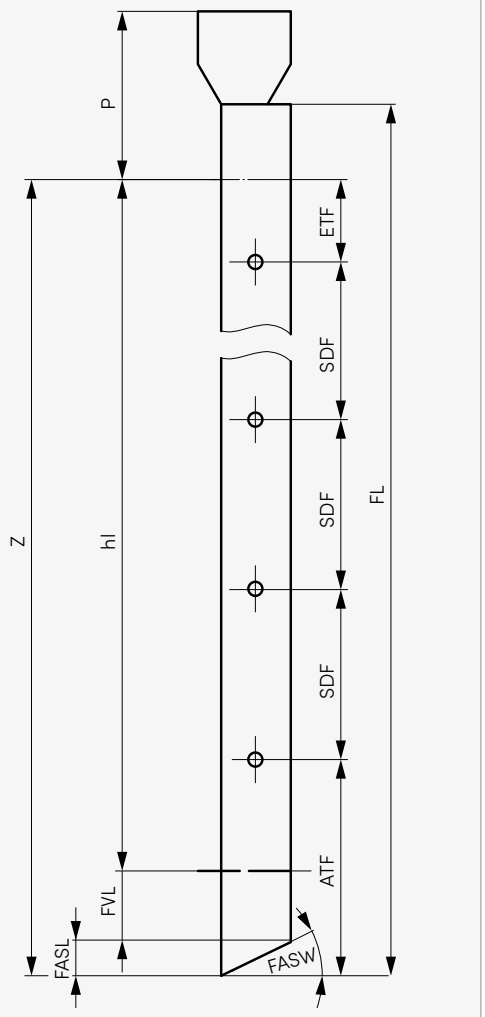

Irregular

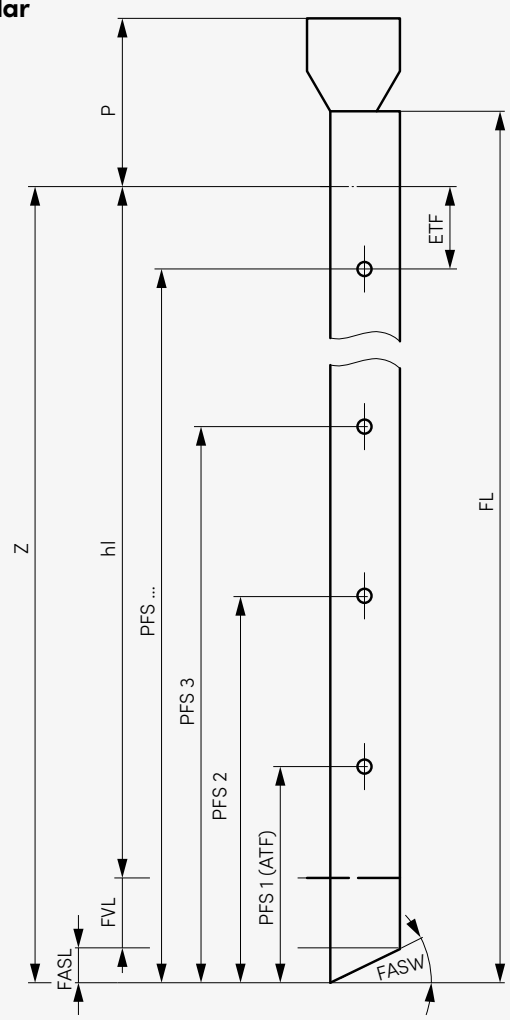

AS Number of slits
ATF Initial spacing guide rail (standard 200)
ETF Endspacing guide rail (standard 100)
FASL Guide rail facet length
FASW Guide rail facet angle

FL Guide length
FVL Guide rail extension
PFS Slot position
SDF Slot distance guide rail: 100 ... 1200

Guide extension and facet 134
Guide rail fastenings 133

Fastening points Lamisol® III System Box

Transverse and holding force per fastening point at least 700 N.

Without guide rail extension

hl	**AS** min.
≤ 1450	2
1451 ... 2450	3
2451 ... 3450	4
> 3450	5

Regular

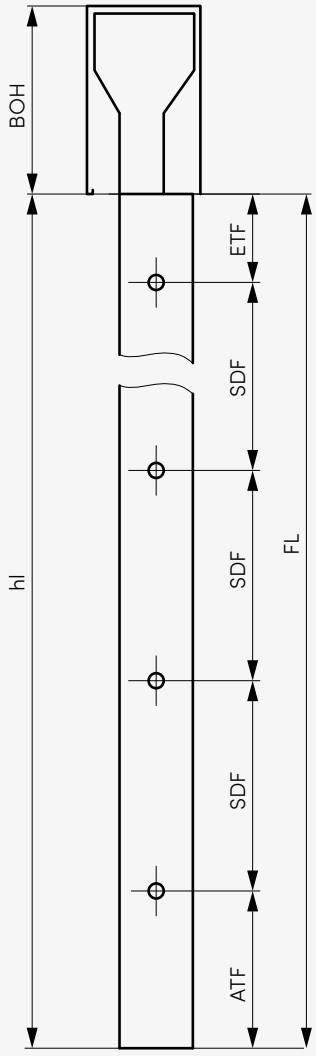

Irregular

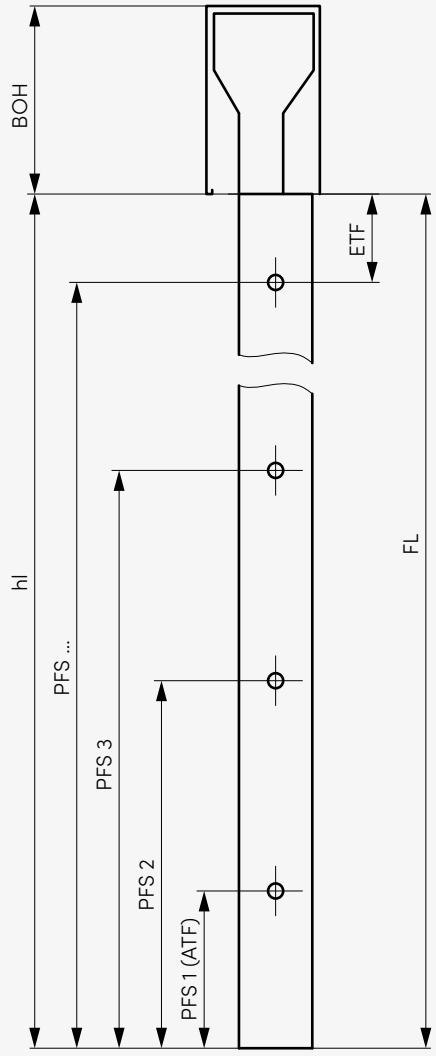

AS Number of slits
ATF Initial spacing guide rail (standard 200)
BOH Box height
ETF Endspacing guide rail (standard 100)
FL Guide length
PFS Slot position
SDF Slot distance guide rail: 100 ... 1200

Guide rail fastenings **133**

Fastening points Lamisol® III System Box

Transverse and holding force per fastening point at least 700 N.

With guide rail extension

Z	AS min.
≤ 1450	2
1451 ... 2450	3
2451 ... 3450	4
> 3450	5

Regular

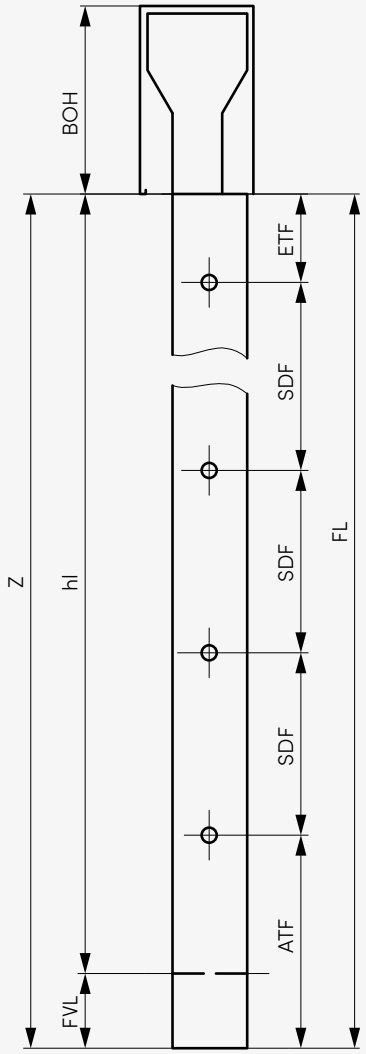

Irregular

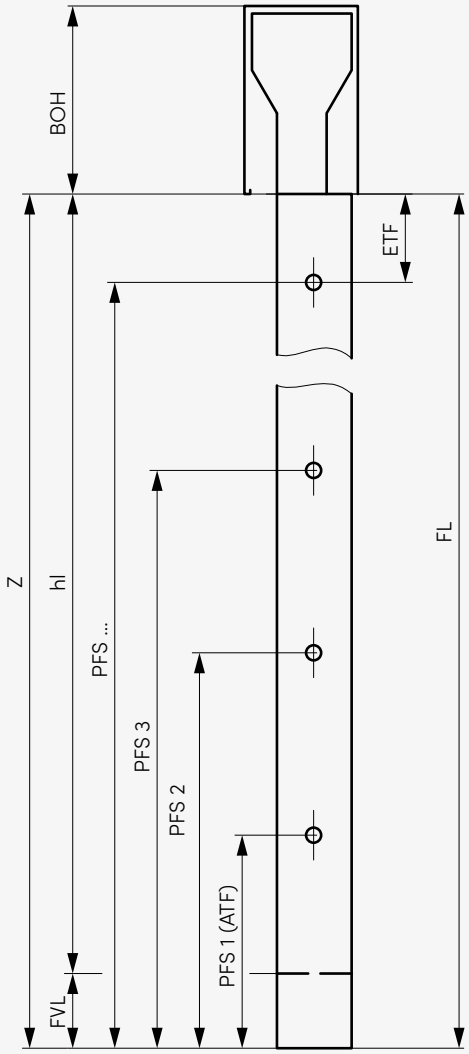

AS Number of slits
ATF Initial spacing guide rail (standard 200)
BOH Box height
ETF Endspacing guide rail (standard 100)
FL Guide length
FVL Guide rail extension
PFS Slot position
SDF Slot distance guide rail: 100 ... 1200

Guide extension and facet 134
Guide rail fastenings 133

Fastening points Lamisol® III System Box

Transverse and holding force per fastening point at least 700 N.

Without guide rail extension, with facet

Z	**AS** min.
≤ 1450	2
1451 ... 2450	3
2451 ... 3450	4
> 3450	5

Regular

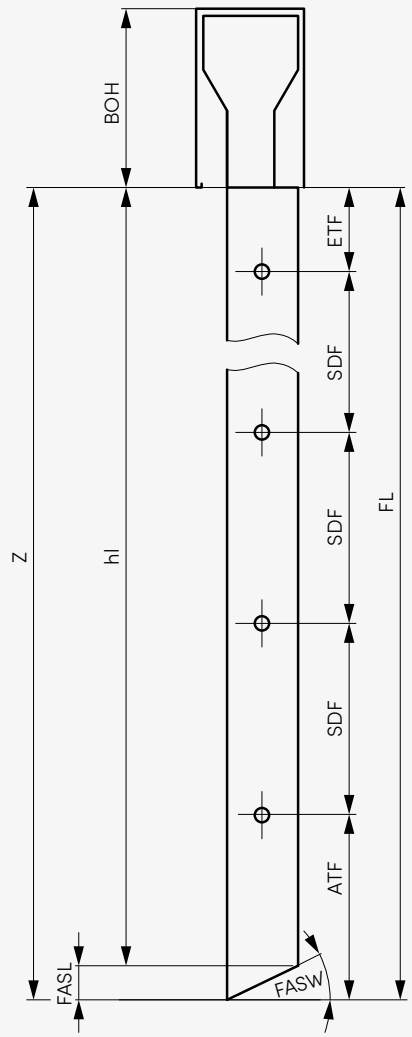

Irregular

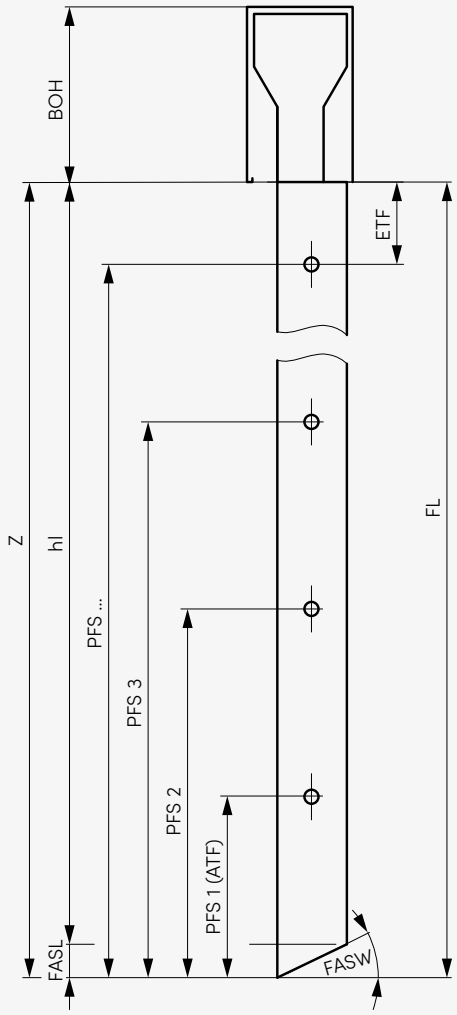

AS Number of slits
ATF Initial spacing guide rail (standard 200)
ETF Endspacing guide rail (standard 100)
FASL Guide rail facet length
FASW Guide rail facet angle
FL Guide length
PFS Slot position
SDF Slot distance guide rail: 100 ... 1200

Guide extension and facet 134
Guide rail fastenings 133

Fastening points Lamisol® III System Box

Transverse and holding force per fastening point at least 700 N.

With guide rail extension and facet

Z	AS min.
≤ 1450	2
1451 ... 2450	3
2451 ... 3450	4
> 3450	5

Regular

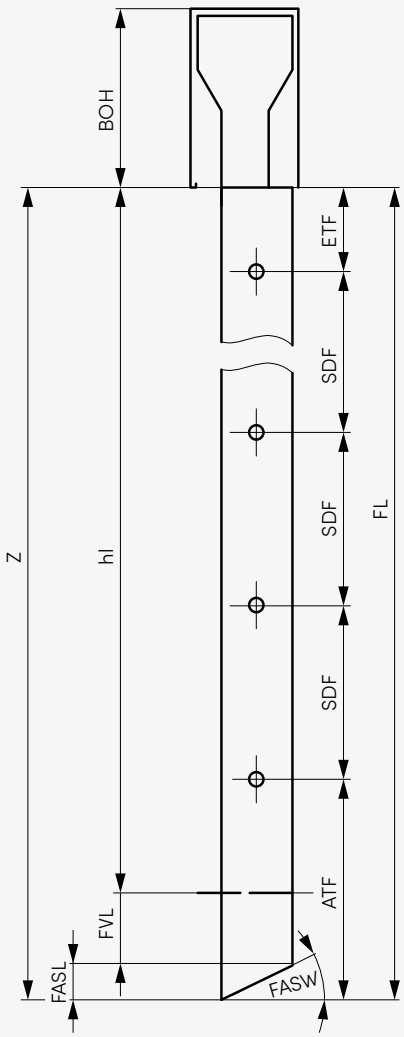

Irregular

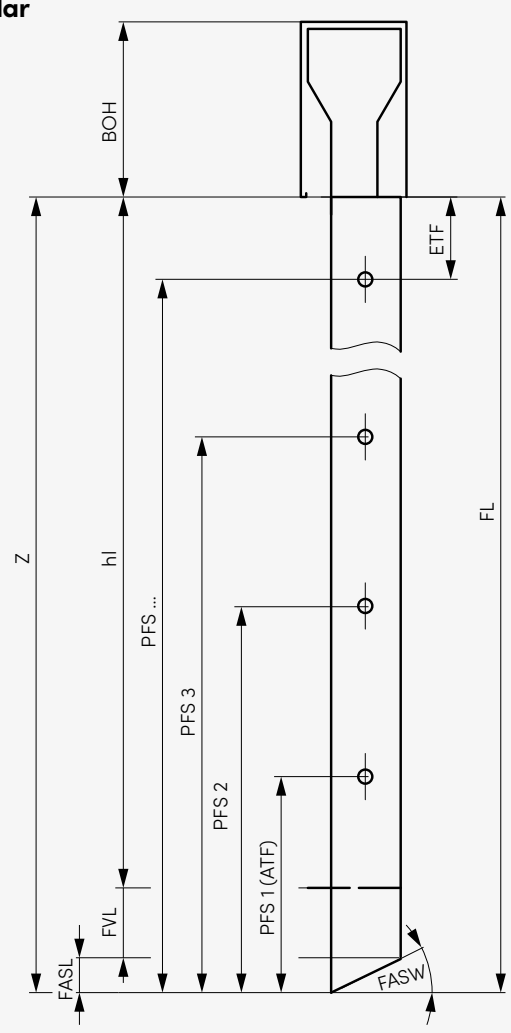

AS Number of slits
ATF Initial spacing guide rail (standard 200)
BOH Box height
ETF Endspacing guide rail (standard 100)
FASL Guide rail facet length
FASW Guide rail facet angle
FL Guide length
FVL Guide rail extension
PFS Slot position
SDF Slot distance guide rail: 100 ... 1200

Guide extension and facet 134
Guide rail fastenings 133

Technical data of motors

Performance characteristics

Type		Limit switch Type	Number of	M [Nm]	n [1/min.]	P [W]	I [A]
Standard							
Elero							
ES...	06.01	mechanical	2	6	26	110	0.50
	09.01			9		170	0.75
E0...	20.01			20		190	1.05
ES...	06.51	mechanical	3	6	26	110	0.50
	09.51			9		170	0.75
E0...	20.51			20		190	1.05
Option							
Somfy							
SH...	06.01	mechanical	2	6	24	95	0.40
	10.01			10		110	0.65
	18.01			18		155	1.00
SW...	06.01	electronic	2	6	24	95	0.40
SI...	10.01			10		110	0.65
SR...	18.01			18		155	1.00
Elero Comfort							
ECM...	06.01	electronic	2	6	26	115	0.50
	09.01			9		156	0.68
	06.51		3	6		115	0.50
	09.51			9		156	0.68
ECB...	06.01	electronic	2	6	26	115	0.50
	09.01			9		156	0.68
	06.51		3	6		115	0.50
	09.51			9		156	0.68

I Current consumption
M Torque
n Rotational speed
P Power consumption

Lamisol® III Vento

Specifications

Limit dimensions **147**

Mounting situations

Built-in system **148**
Built-in system with cover **148**
Header dimensions | Heights of package **149**
End rail **150**
Slat profile **150**
Beginning distance | Slot spacing **151**
Housing fastening **152**
Number of box supports **154**
Options **155**
Guide rail **156**
Sections | Details **157**
Vertical connections | Standard motor position **158**

Fastenings

Guide rail installation (principle) **160**
Guide rail fastenings (principle) **162**
Guide extension **165**
Installation window **166**
Fastening points **167**

Drive

Connected systems **169**
Technical data of motors **171**

Limit dimensions

Single blind

Operation	Width min. (bk)	Width[1,2] max. (bk)	Height min. (hl)	Height max. (hl)	Surface max. [m²]
Motor drive	695	3000	400	3000	9

Connected systems

Operation	Width[1] max. (bk)	Blinds max.	Blinds per system	Surface max. [m²]
Motor drive	9000	3	2	16
			3	20

[1] For buildings and high-rise structures, which are exposed to high winds, this maximum value should be decreased as required. Also see wind classes data sheet.

[2] **bk > 2500**: mount housing with an additional box support.

Soffit installation or suspended installation: max 100

Definitions of dimensions **327**

Built-in system

Vertical section

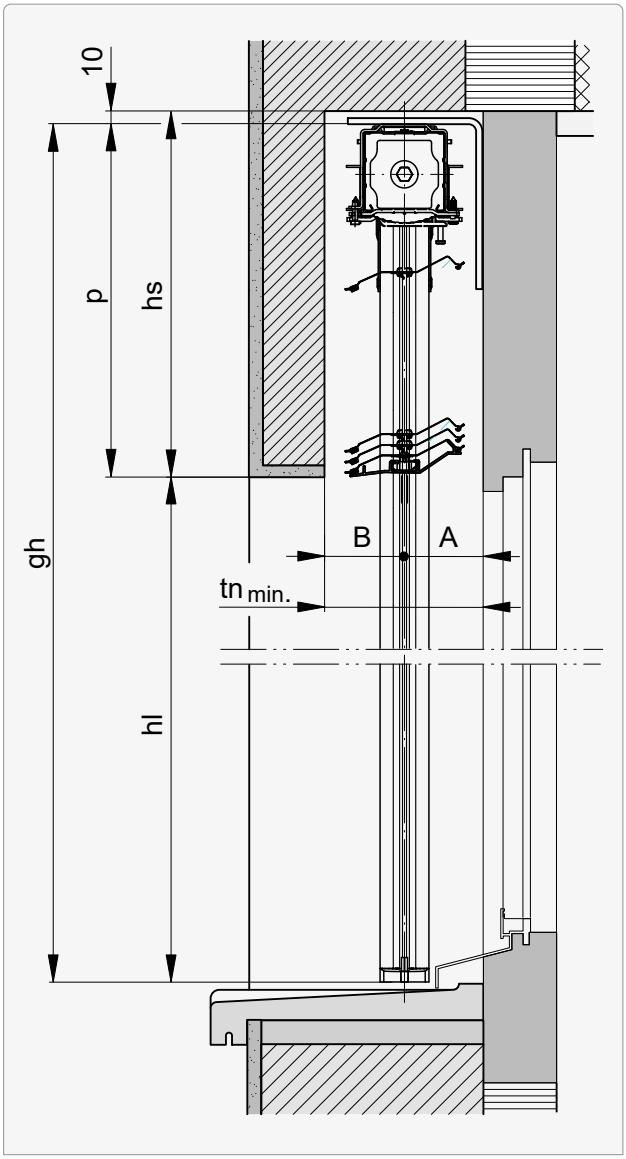

Horizontal section

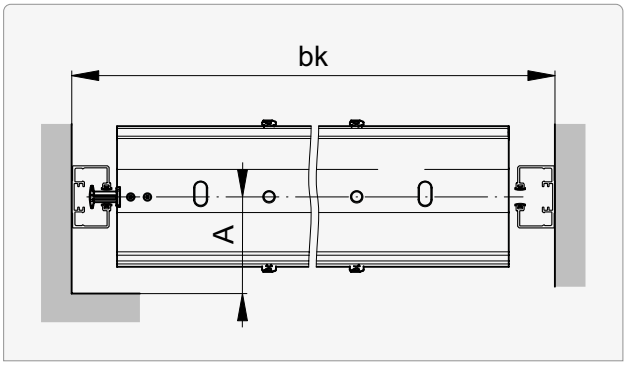

Built-in system with cover

Vertical section

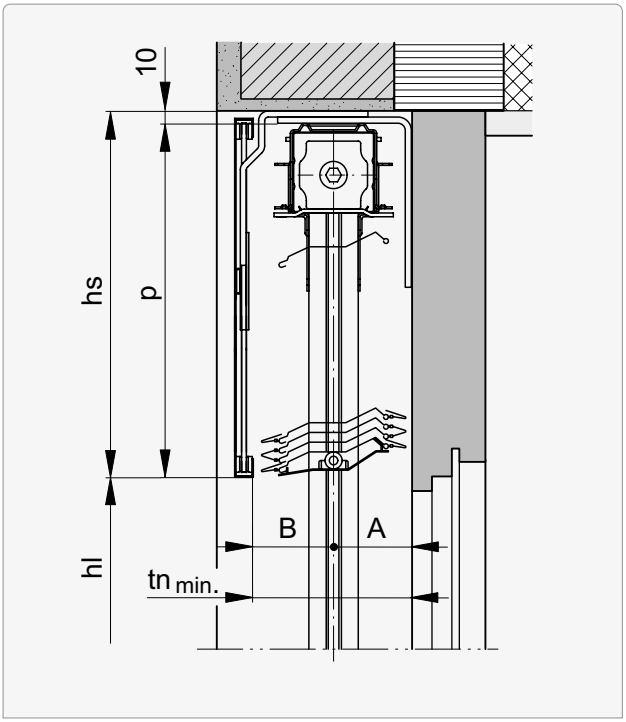

Sections | Details 157

Values for **A**, **B** and **tn** 149

Header dimensions | Heights of package

hl →l	P min.	hs[1]	hl →l	P min.	hs[1]
1800	215	225	**2450**	250	260
1850	220	230	**2500**	250	260
1900	220	230	**2550**	250	260
1950	220	230	**2600**	255	265
2000	225	235	**2650**	260	270
2050	225	235	**2700**	265	275
2100	230	240	**2750**	265	275
2150	230	240	**2800**	270	280
2200	235	245	**2850**	270	280
2250	240	250	**2900**	275	285
2300	240	250	**2950**	280	290
2350	245	255	**3000**	280	290
2400	250	260			

tn min.	A	B
130*	65	65

[1] Lamisol® III Vento Reflect: **hs + 5**.

* + possible addition for protruding weatherboard or doorknobs.

Header dimensions are approximate values which may exhibit **negative or positive deviations** depending on the technical circumstances. **A dimensional tolerance of ±5 mm** is observed for the header height.

Sheet panel profile

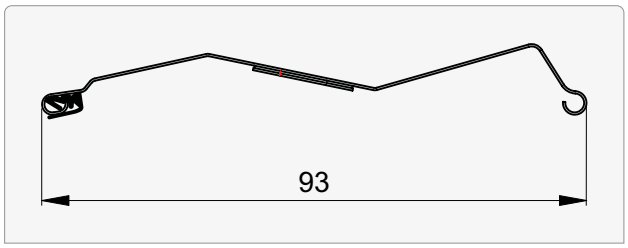

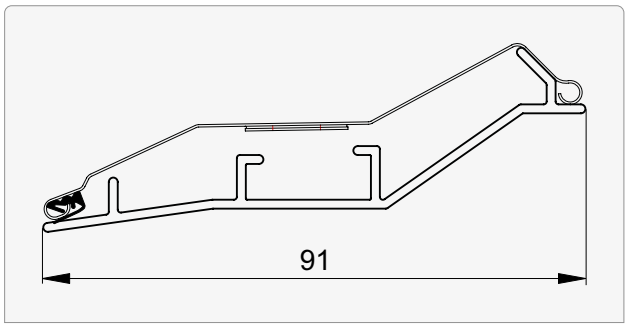

Beginning distance | Slot spacing

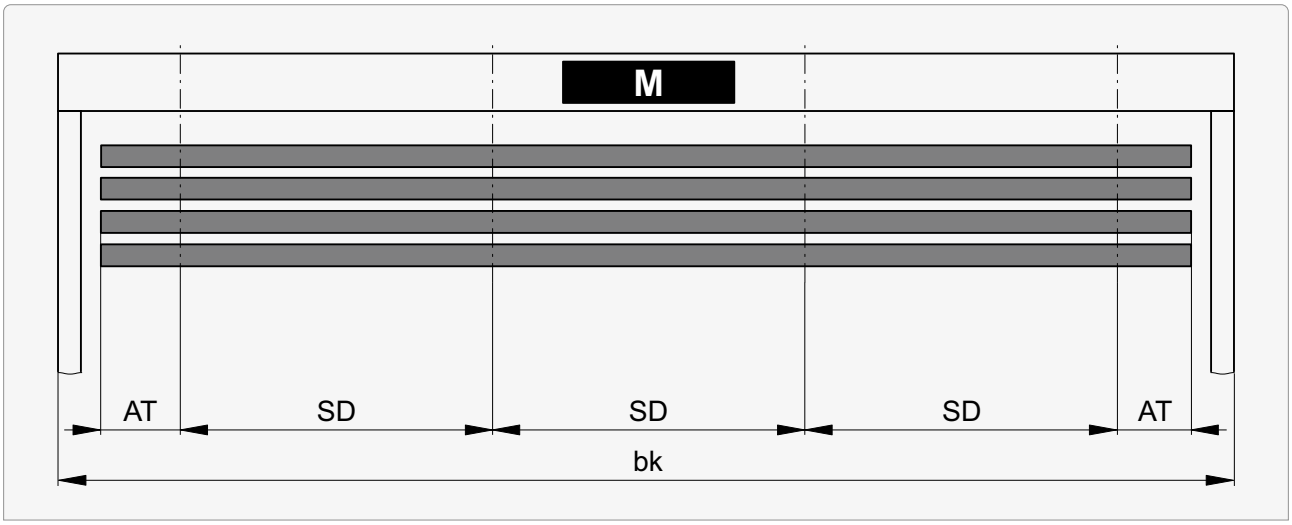

bk	AT min.	SD min.	SD max.
≤1250	100	350*	1000*
>1250	200		

* Standard slot spacing machine fabrication

Deviations from the standard are posible when:

Deviation	Correction
Support loading too high	AS
Slot spacing < 350	AT + AS
With motor	AT + AS

Housing fastening

Transverse and holding force per fastening point at least 2200 N.

At top NO

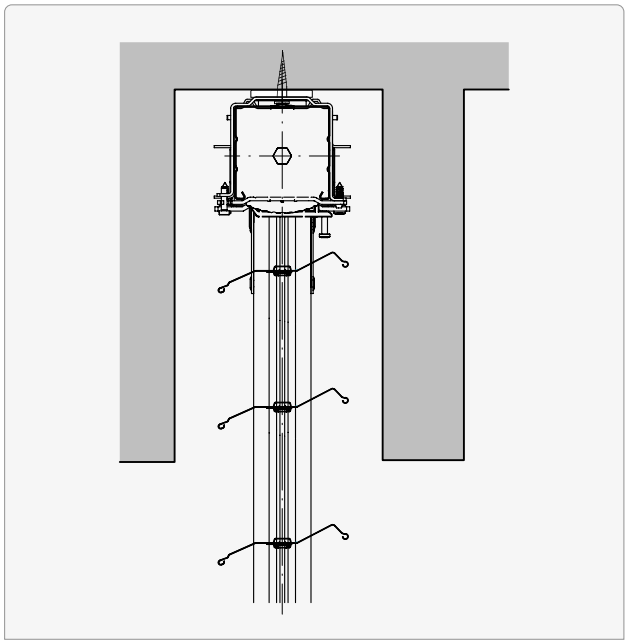

Box support KT

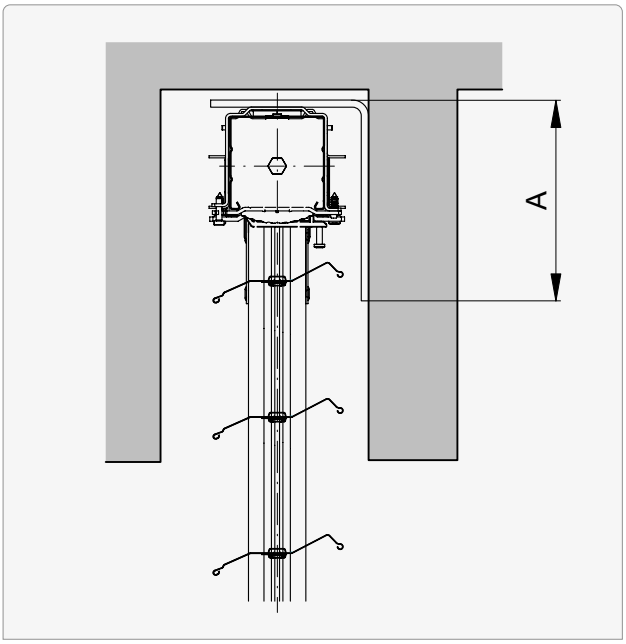

Box support for type KT, for small headers*

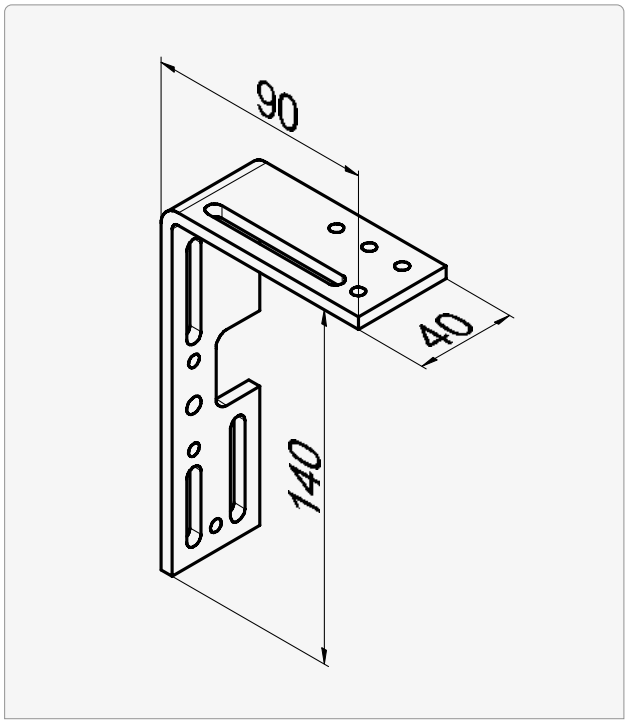

Box support for type KT

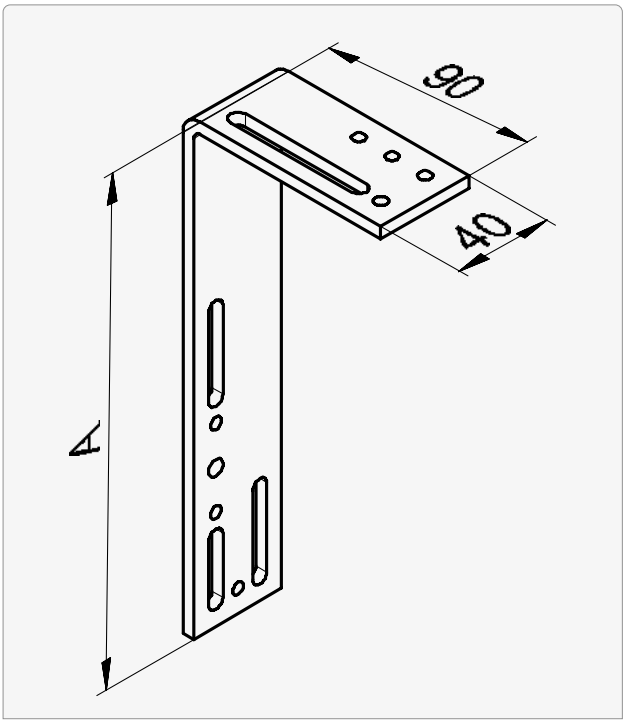

A
140

A
200
260

* Header 100

Housing fastening

Transverse and holding force per fastening point at least 2200 N.

Double box support DR

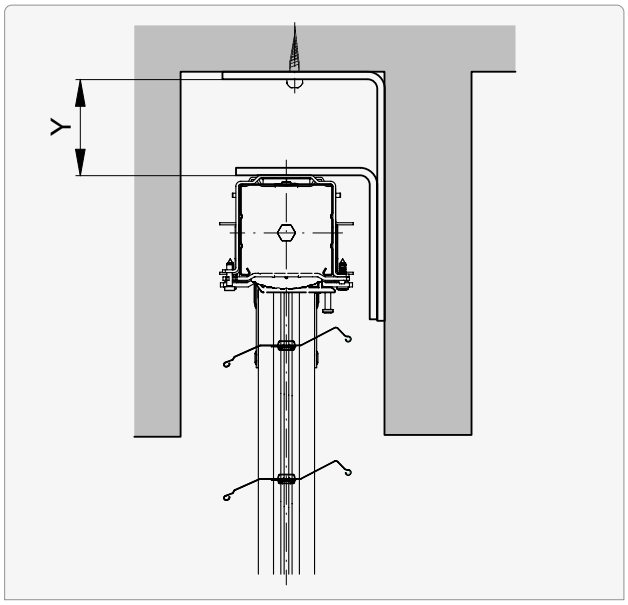

Double box support for type DR

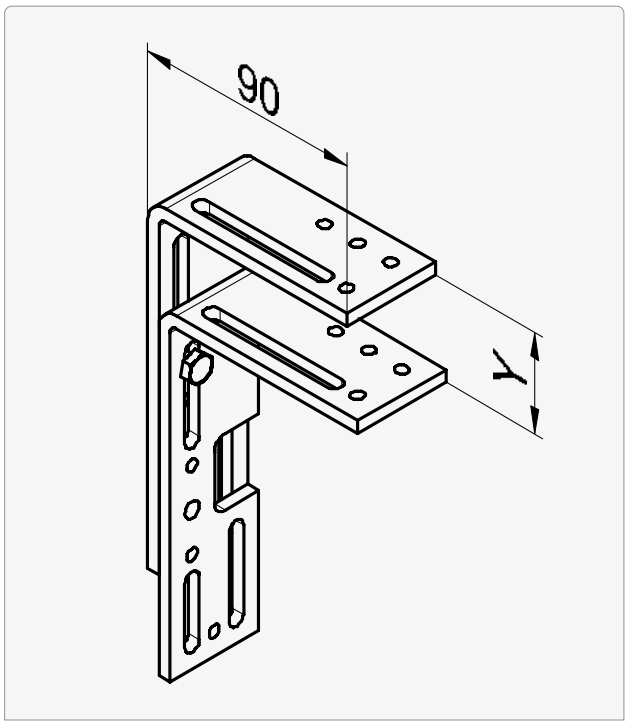

Y
10 ... 75
75 ... 135
135 ... 200

Gallery clip GB

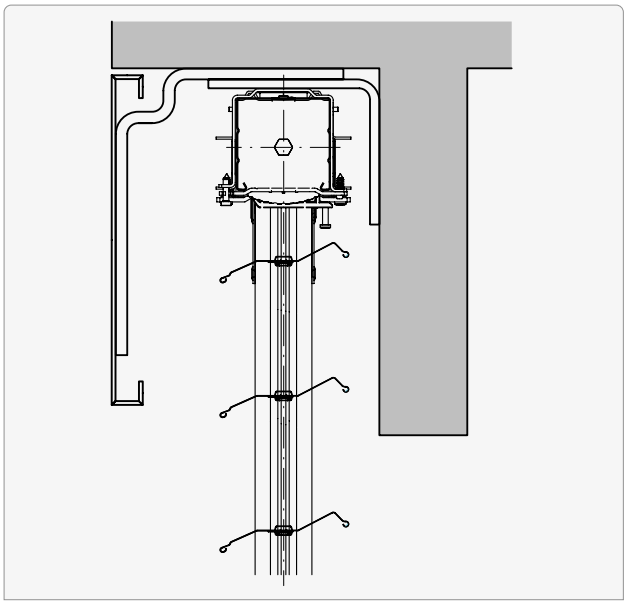

Gallery clip for type GB

See additional documentation at the Griesser Download Center:

Tech Guide "Covers"

Number of box supports

Additional fastenings

bk	Quantity
≤ 2500	0
2501 … 3000	1

Options

Lamisol® III Vento Reflect

For glare protection at bottom and use of daylight at top.

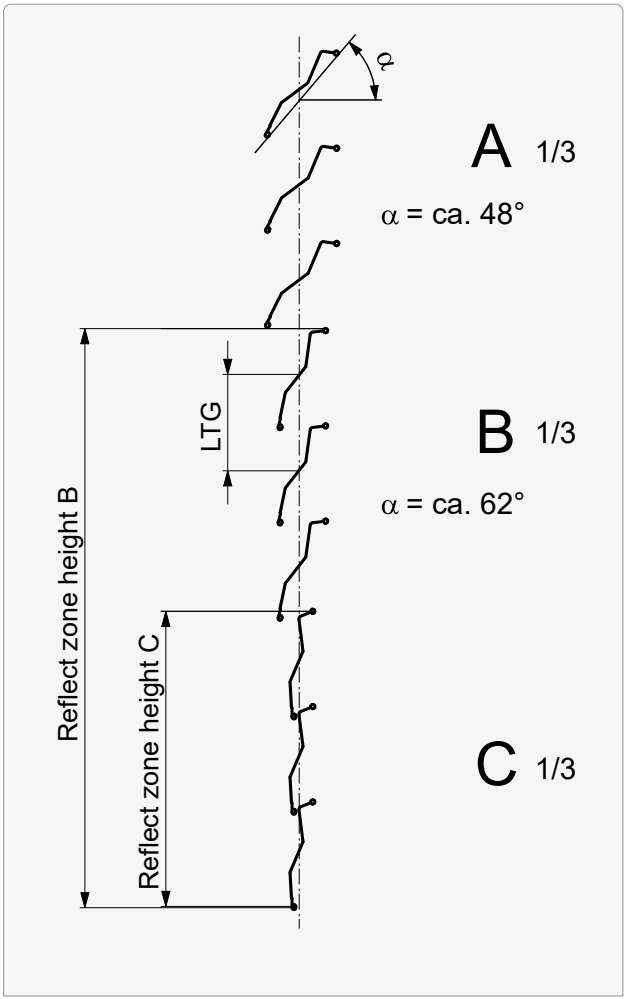

For technical reasons, the Reflect zone **(C + B)** must be two slat spacing units larger than the Reflect zone **C**.

A Use of daylight
B Ability to see outside
C Glare protection
LTG Slat spacing

Guide rail

Type F | Fix guide

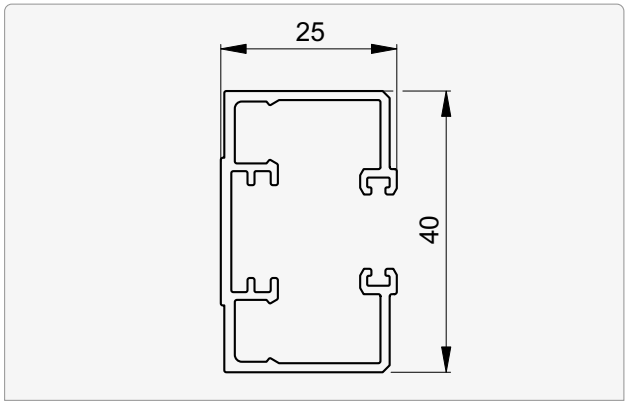

- Distance between guides **FD** **169**
- Fastening points **167**
- Guide extension and facet **165**
- Guide rail fastenings **162**
- Installation window **166**
- Integrated guides **161**

Sections | Details

Detail installation

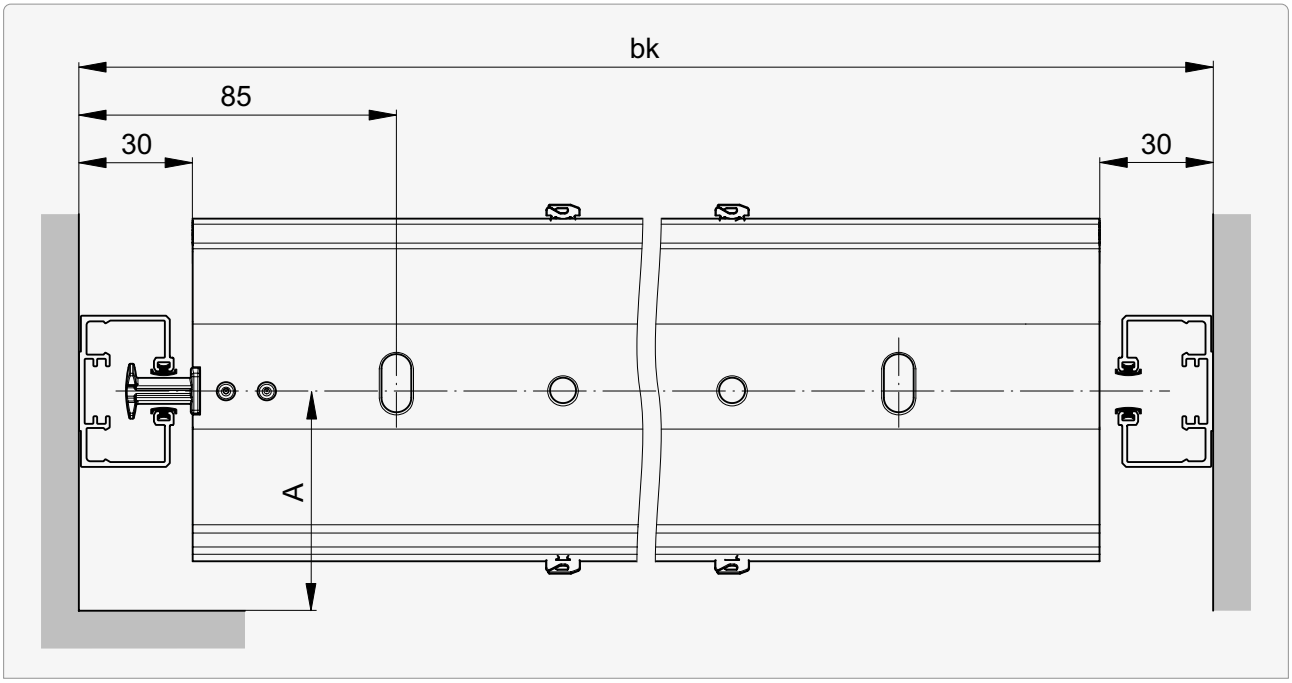

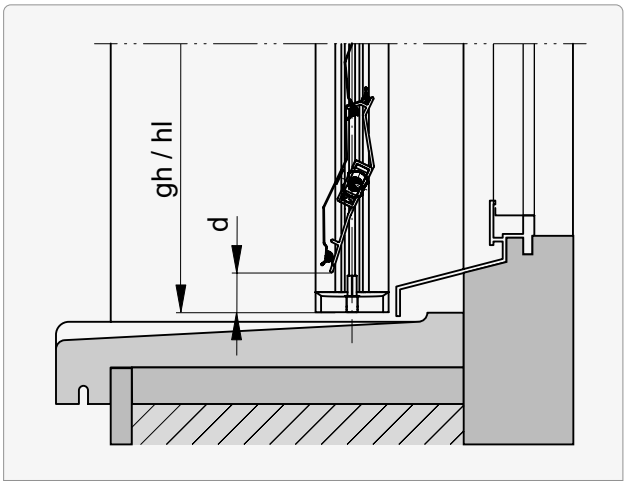

d (d - dimension)
15 +5/–3 (Lamisol® III Vento Reflect: 25 +5/–3)

d - dimension may vary with different blind dimensions.

Value for **A** **149**

Vertical connections | Standard motor position

Number of bearings



Standard motor position 159

Vertical connections | Standard motor position

Standard motor position

Number of bearings	Standard motor position
2	
3	
4	
5	

- Bearing
- M Standard motor position
- M Possible motor position (on request)

Guide rail installation (principle)

Guides attached (to soffit) | Type A

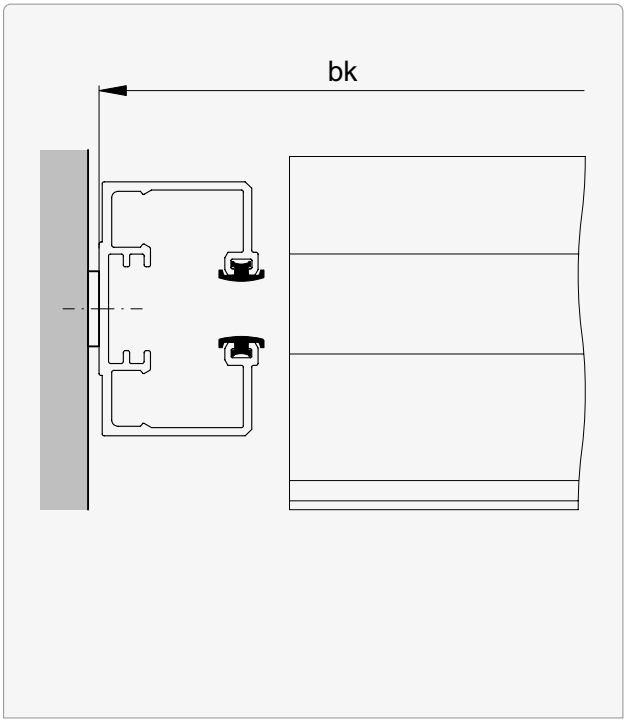

Guides suspended

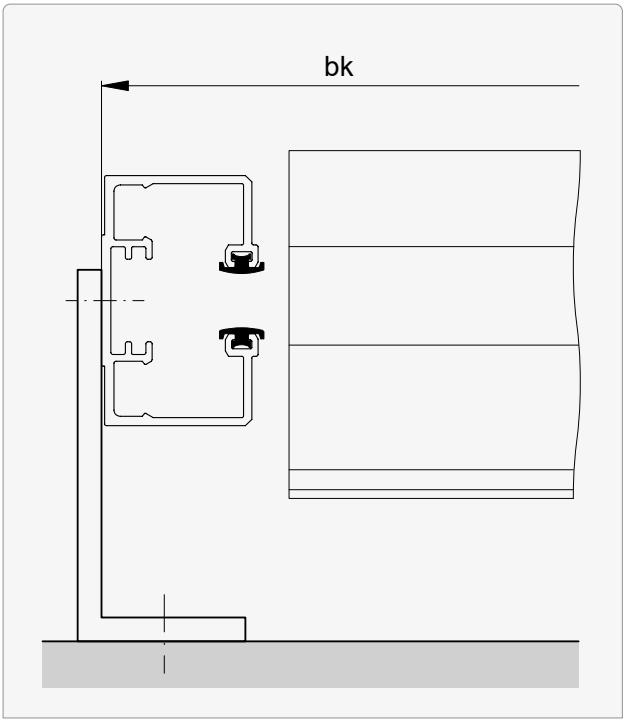

Observe possible guide rail spacer for **bk**.
Standard: 2 mm

Guide rail installation (principle)

Guides recessed

***Type F | Without guide cut-out:**
Only possible if curtain can be retracted from below.

Type F*

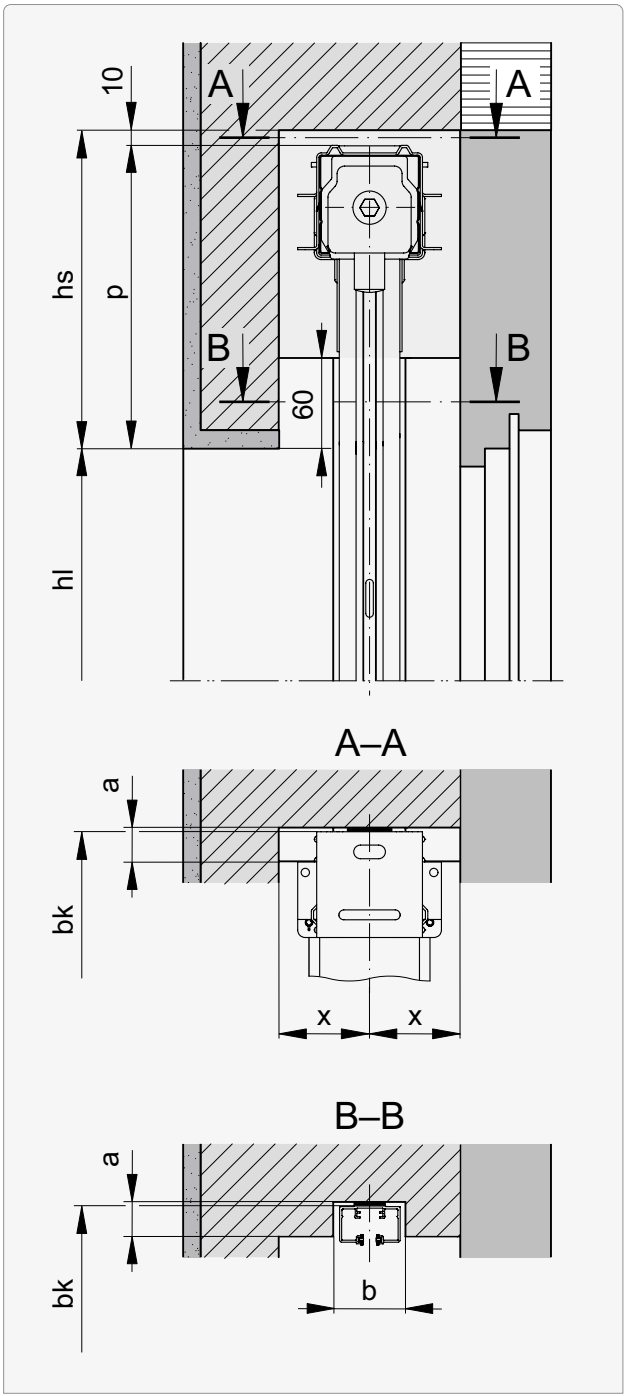

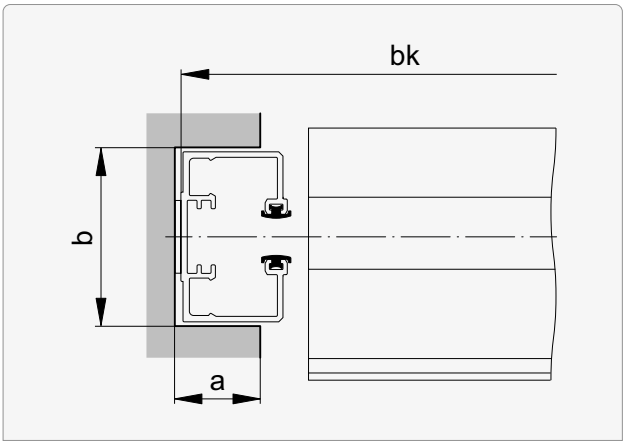

a	b
≤20	≥42

Product | Version	x min.
Lamisol® III 90 Vento	65

Guide rail fastenings (principle)

Overview

Type														
A	B	Bd	C	Cd	E	F	G	H	Kv	M	T	Tv	V	Wv
●	–	○[1]	–	○[1]	–	–	–	–	–	–	–	–	○[2]	–

● applicable without restrictions

○ applicable with restrictions:
[1] A = max. 100
[2] only with continuous fastening bracket

A Soffit installation

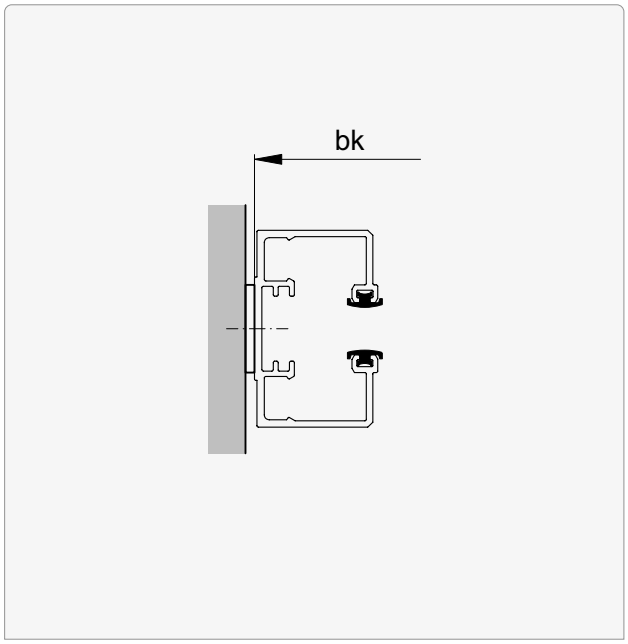

Transverse and holding force per fastening point at least 1000 N.

Observe possible guide rail spacer for **bk**.
Standard: 2 mm

Guide rail fastenings (principle)

Bd Installation with continuous fastening bracket

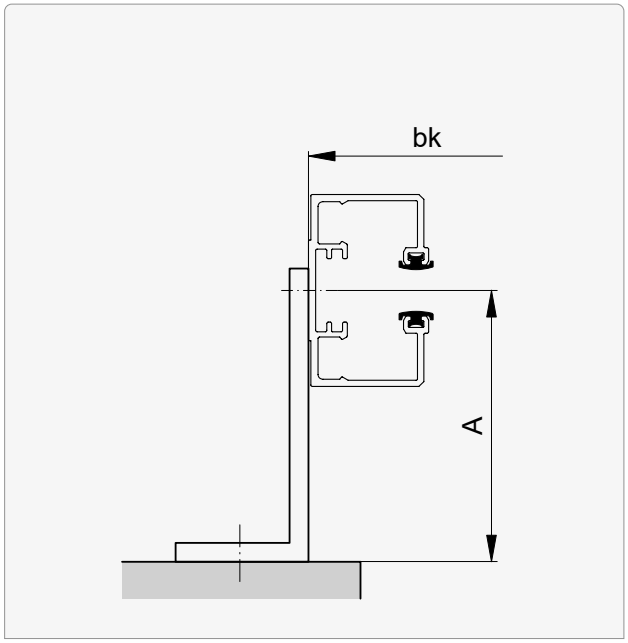

Bracket outwards

Cd Installation with continuous fastening bracket

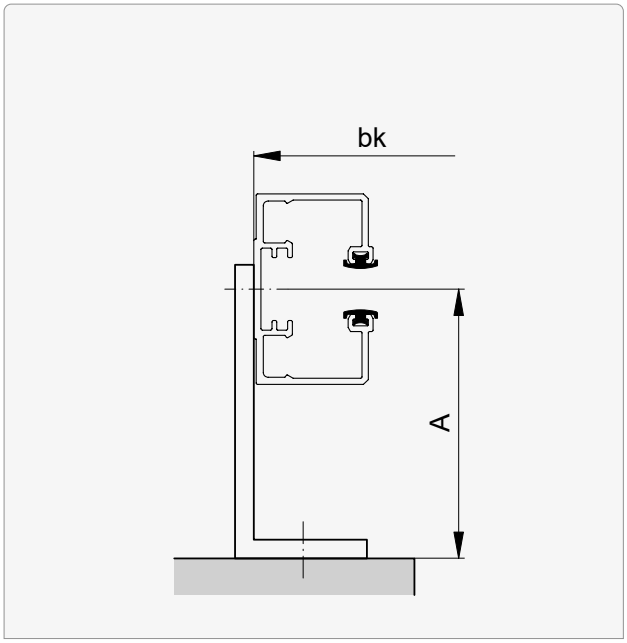

Bracket inwards

Continuous fastening bracket for types Bd and Cd

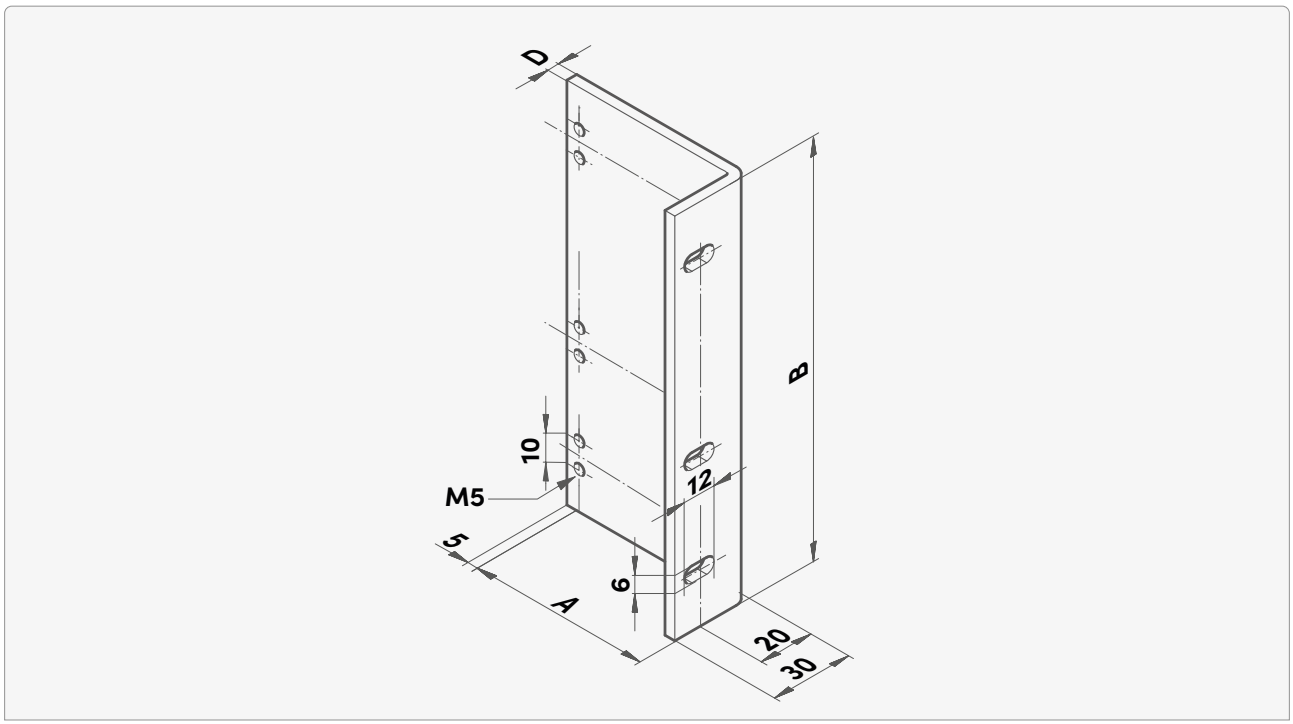

A*	D
10 ... 100	always 4

Transverse force at least 1000 N and holding force at least 5500 N per fastening point.

* in 5 mm steps

Guide rail fastenings (principle)

V Installation with one bracket

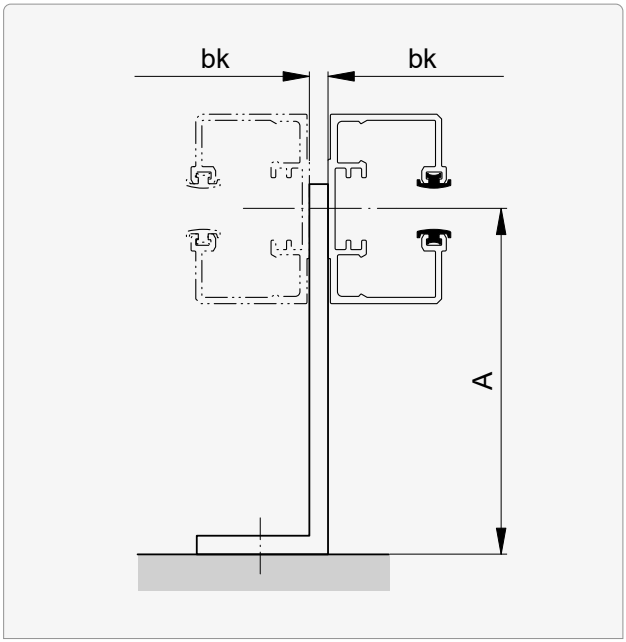

The blind on the right uses the fastening for the blind on the left.

Transverse and holding force per fastening point at least 1000 N.

Guide extension

Extension

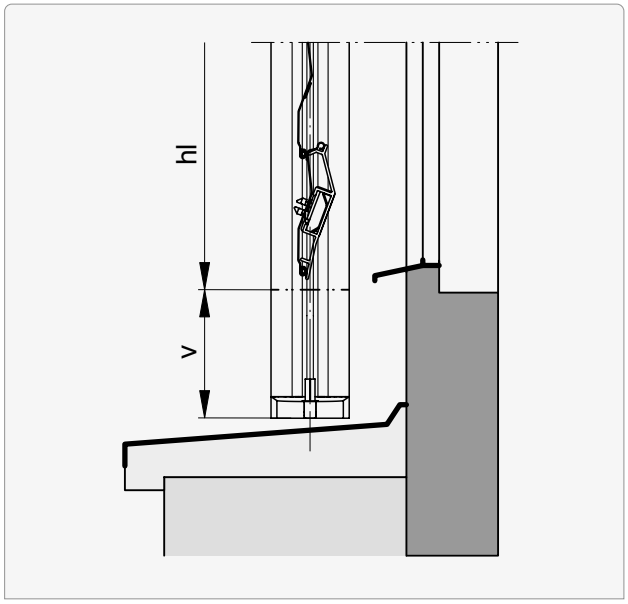

v
0 ... 500

Installation window

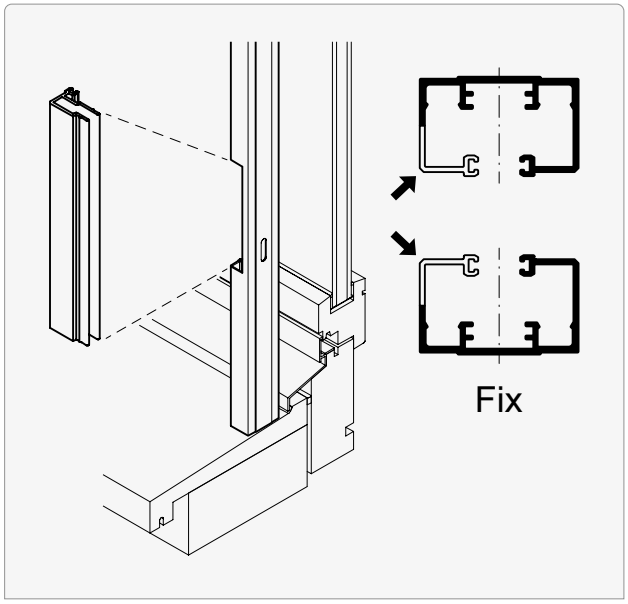

Without extension

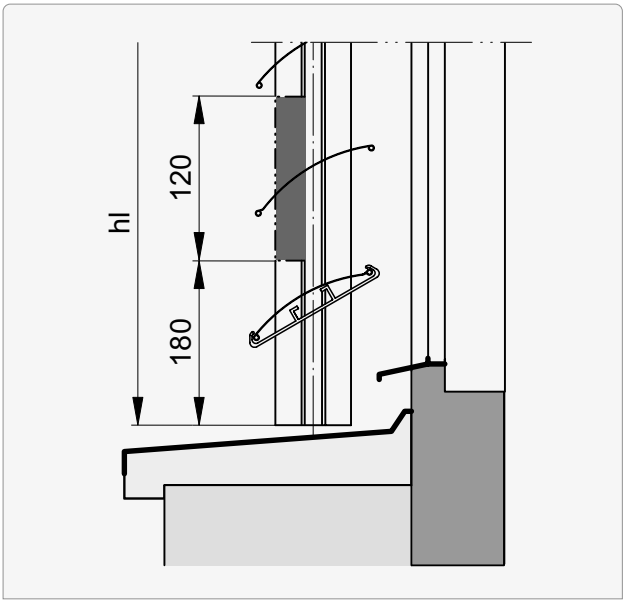

With extension

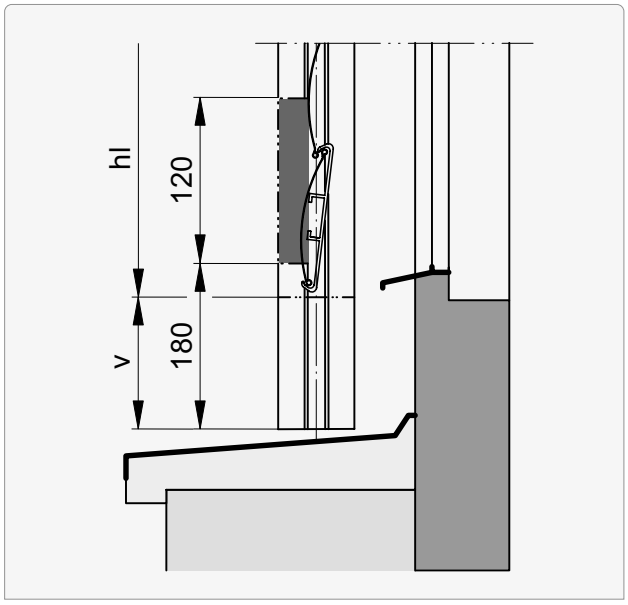

v Guide rail extension: max. 1000

Fastening points

Transverse and holding force per fastening point at least 700 N.

Without guide rail extension

hl	AS
≤740	2
741 ... 1340	3
1341 ... 1940	4
1941 ... 2540	5
>2540	6

Regular

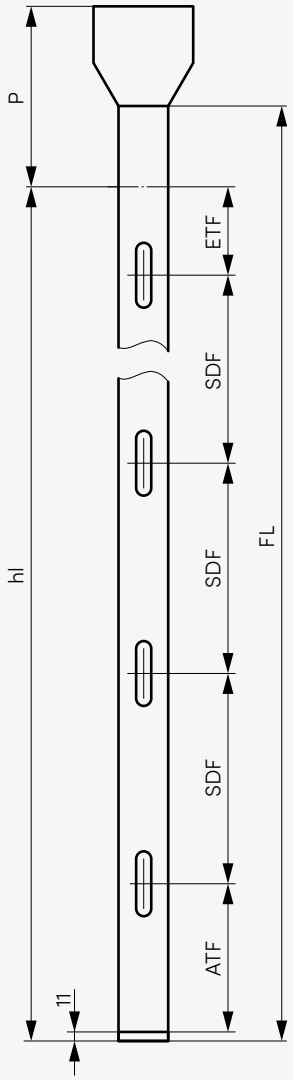

Irregular

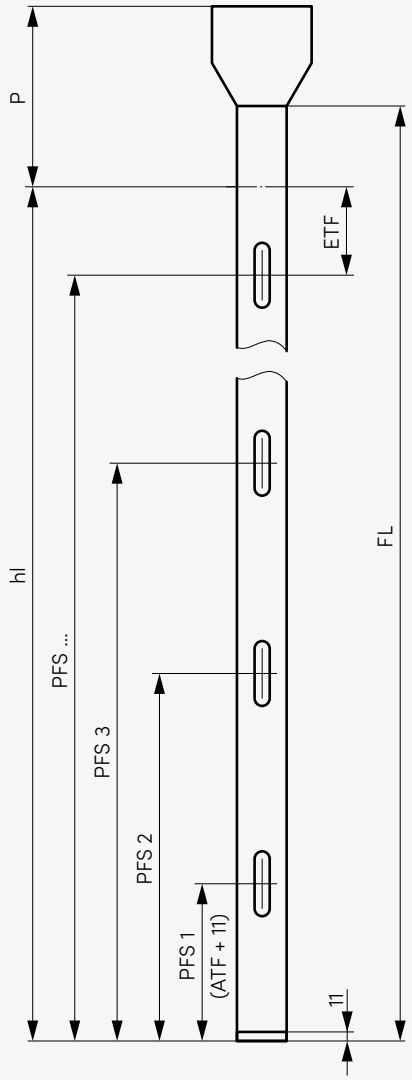

AS Number of slits
ATF Initial spacing guide rail (40)
ETF Endspacing guide rail (standard 100)
FL Guide length
PFS Slot position
SDF Slot distance guide rail: 100 ... 600

Guide rail fastenings 162
Installation window 166

Fastening points

Transverse and holding force per fastening point at least 700 N.

With guide rail extension

Z	AS
≤740	2
741 ... 1340	3
1341 ... 1940	4
1941 ... 2540	5
>2540	6

Regular

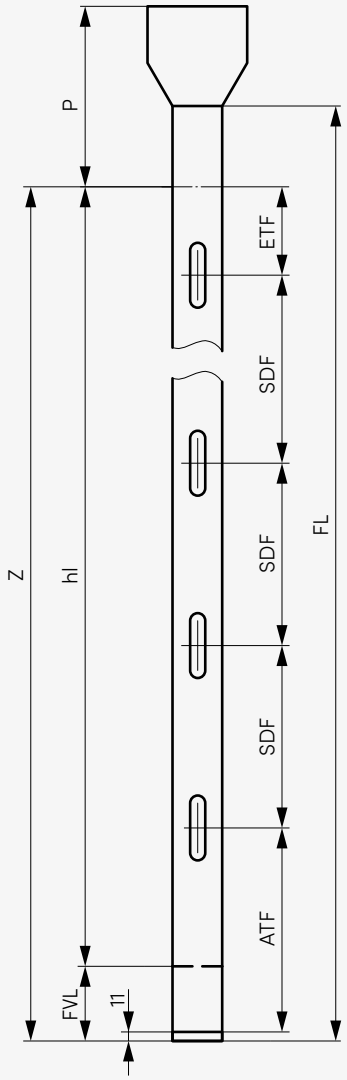

Irregular

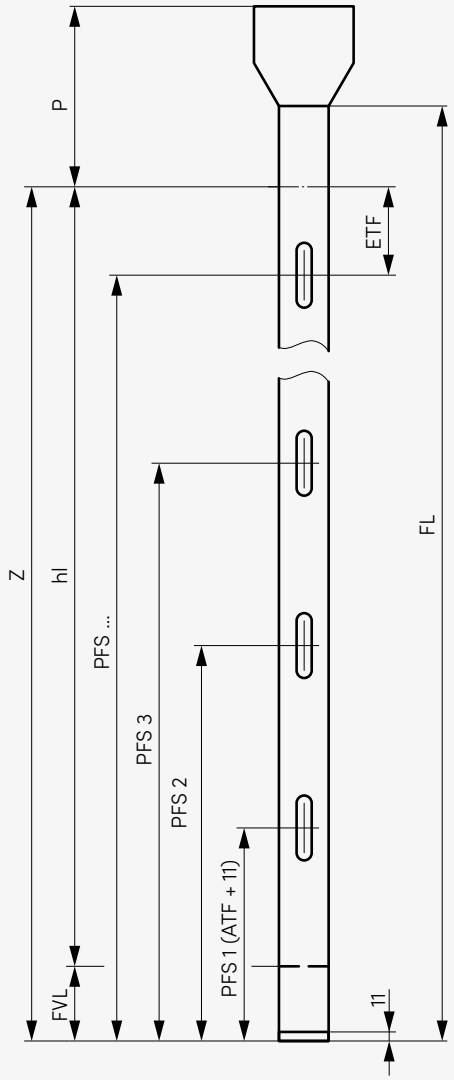

AS Number of slits
ATF Initial spacing guide rail (40)
ETF Endspacing guide rail (standard 100)
FL Guide length
FVL Guide rail extension
PFS Slot position
SDF Slot distance guide rail: 100 ... 600

Guide extension 165
Guide rail fastenings 162
Installation window 166

Connected systems

System width

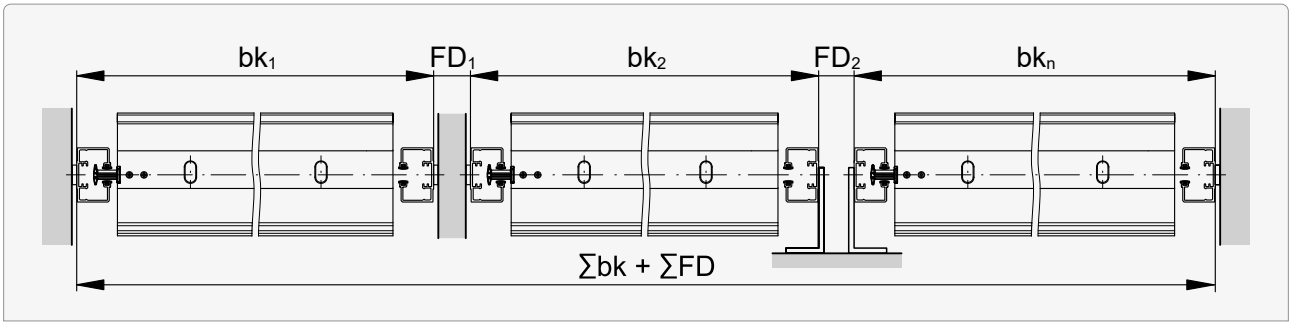

Distance between guides FD

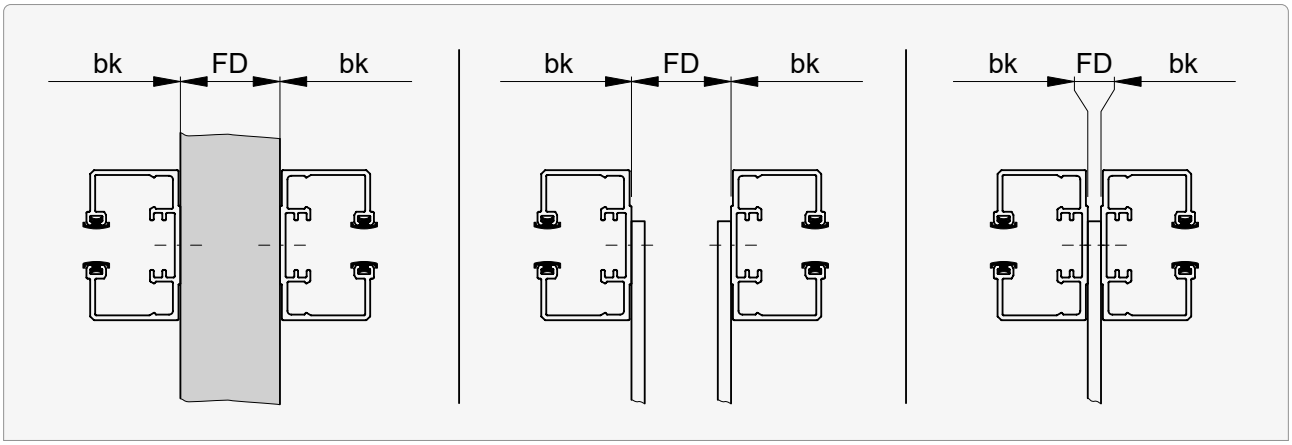

FD min.	FD max.
5	1000

Opening for connected blinds **170**

Connected systems

Drive position for connected blinds

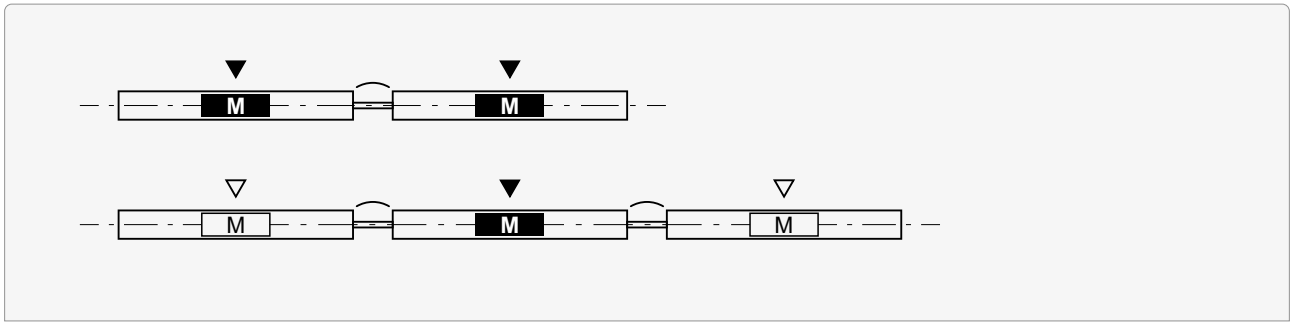

▼ Standard drive position

▽ Possible drive position

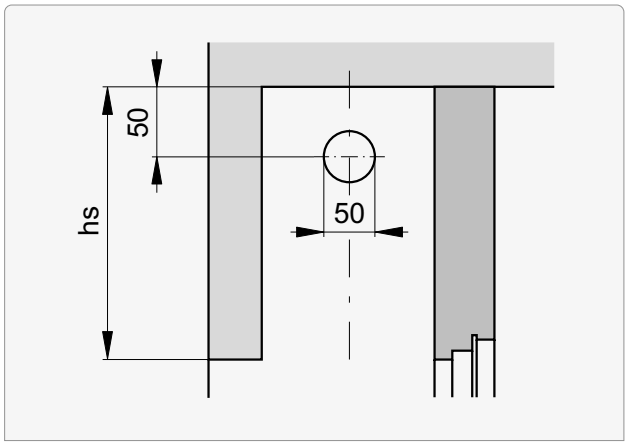

Technical data of motors

Performance characteristics

Type		Limit switch Type	Number of	M [Nm]	n [1/min.]	P [W]	I [A]
Standard							
Elero							
ES...	06.01	mechanical	2	6	26	110	0.50
	09.01			9		170	0.75
E0...	20.01			20		190	1.05
ES...	06.51	mechanical	3	6	26	110	0.50
	09.51			9		170	0.75
E0...	20.51			20		190	1.05
Option							
Somfy							
SH...	06.01	mechanical	2	6	24	95	0.40
	10.01			10		110	0.65
	18.01			18		155	1.00
SW...	06.01	electronic	2	6	24	95	0.40
SI...	10.01			10		110	0.65
SR...	18.01			18		155	1.00
Elero Comfort							
ECM...	06.01	electronic	2	6	26	115	0.50
	09.01			9		156	0.68
	06.51		3	6		115	0.50
	09.51			9		156	0.68
ECB...	06.01	electronic	2	6	26	115	0.50
	09.01			9		156	0.68
	06.51		3	6		115	0.50
	09.51			9		156	0.68

I Current consumption
M Torque
n Rotational speed
P Power consumption

Aluflex®

Specifications	
Limit dimensions Aluflex®	**174**
Limit dimensions Aluflex® Box	**174**

Mounting situations	
Built-in system	**175**
Built-in system with cover	**177**
Installation system with box	**179**
Header dimensions | Heights of package	**181**
Slat profiles	**182**
End rails	**182**
Beginning distance | Slot spacing	**183**
Housing fastening	**184**
Number of box supports	**186**
Fixation for box base profile	**187**
Technical data of motors	**188**
Options	**189**

Rail guide	
Guide rails	**190**
Sections | Details	**191**
Sections for crank drive (MBMA)	**194**
Additional cables	**195**
Vertical connections | Standard motor position	**196**

Fastenings	
Guide rail installation (principle)	**199**
Guide rail fastenings (principle)	**201**
Guide extension and facet	**209**
Guide rail cut-outs in windowsill area	**212**
Installation window	**213**
Guide rail end for suspended guide rails	**216**
Guide extension for window sill installation	**216**
Fastening points	**217**

Drive	
Connected systems	**219**

Cable guide

Cable guide **221**
Sections | Details **221**
Sections for crank drive (MBMA) **223**
Additional cables **224**
Vertical connections | Standard motor position **225**

Fastenings

Cable fastenings **228**

Drive

Connected systems **230**

Limit dimensions Aluflex®

Single blind

Operation	Width min. (bk)	Width[2] max. (bk)	Height min. (hl)	Height max. (hl)	Surface[3] max. [m²]
Crank drive	550*	4500[5] 5000[6]	550	4500	11
Motor drive	625				20

Connected systems

Operation	Width[2] max. (bk)	Blinds max.	Surface[3] max. [m²]
Crank drive[1]	10000	4	11
Motor drive[4]			24

[1] A max. of 2 blinds may be connected on each side of the gearbox.

* with MBMA– on request

Limit dimensions Aluflex® Box

Single blind

Operation	Width min. (bk)	Width[2] max. (bk)	Height min. (gh)	Height max. (gh)	Surface[3] max. [m²]
Motor drive	625	4500[5] 5000[6]	735	4760	11

Connected systems

Operation	Width[2] max. (bk)	Blinds max.	Surface[3] max. [m²]
Motor drive[4]	10000	4	24

[2] For buildings and high-rise structures, which are exposed to high winds, this maximum value should be decreased as required. Also see wind classes data sheet.

[3] If crank drive is in slat area: maximum surface area and crank position available on request.

[4] For 3 or 4 blinds, the motor should be positioned in the center..

[5] Aluflex® guide rails

[6] Aluflex® cable guide

Definitions of dimensions 327

Built-in system

Vertical section: Guide rail conventional

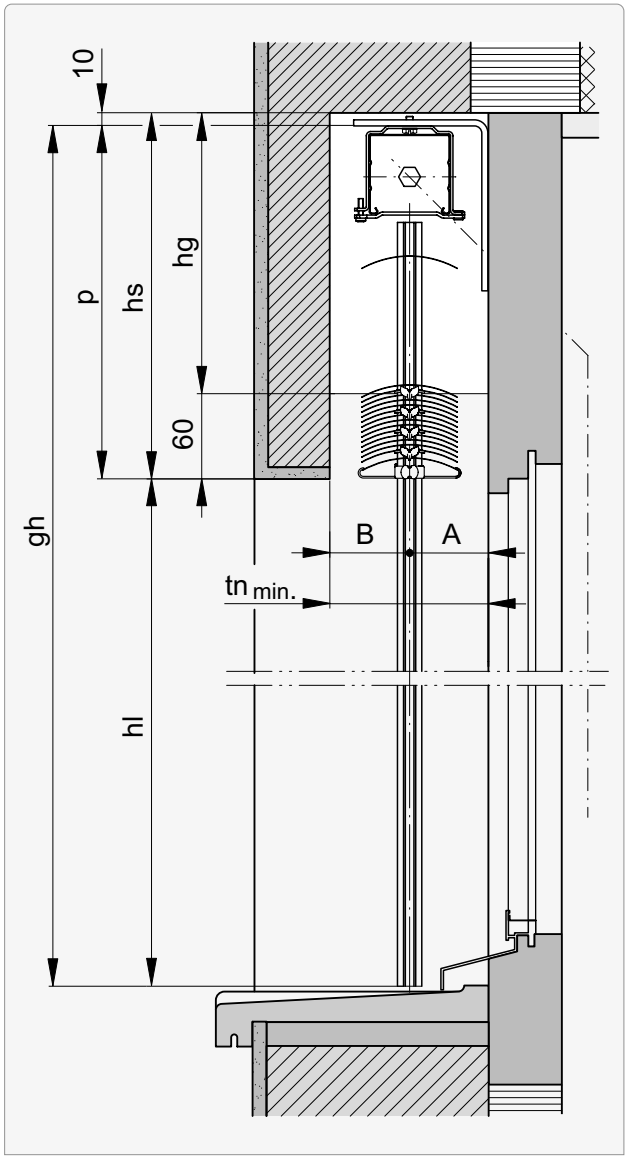

Vertical section: Guide rail Fix-L

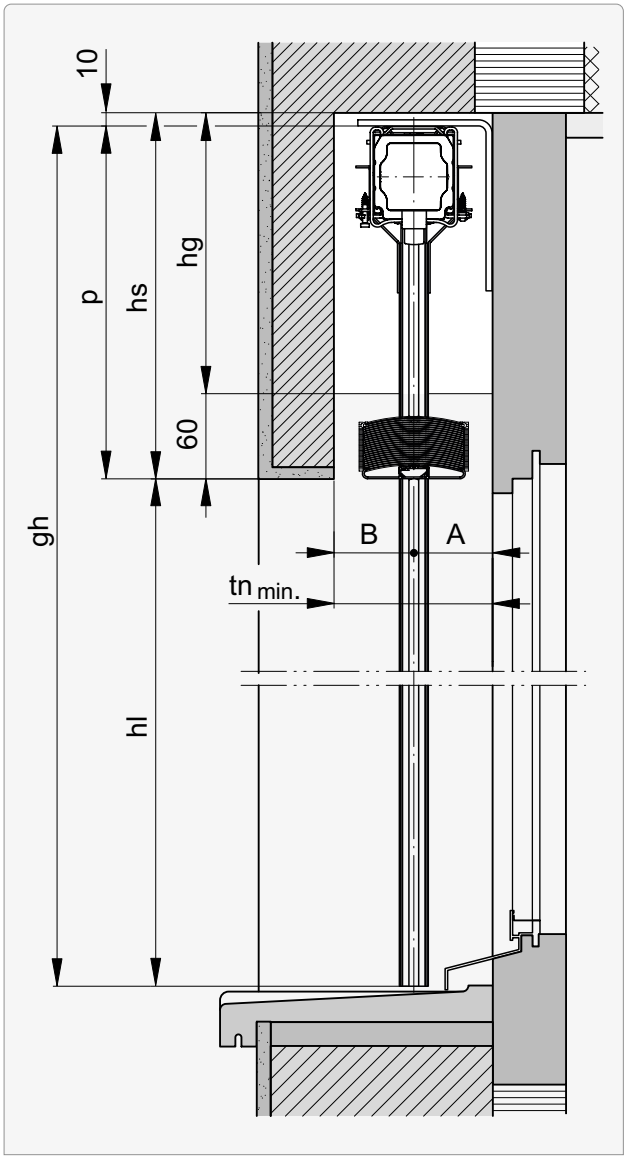

Horizontal section: Guide rail conventional

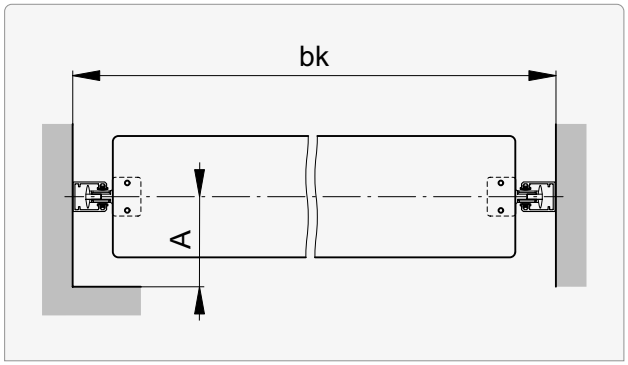

Horizontal section: Guide rail Fix-L

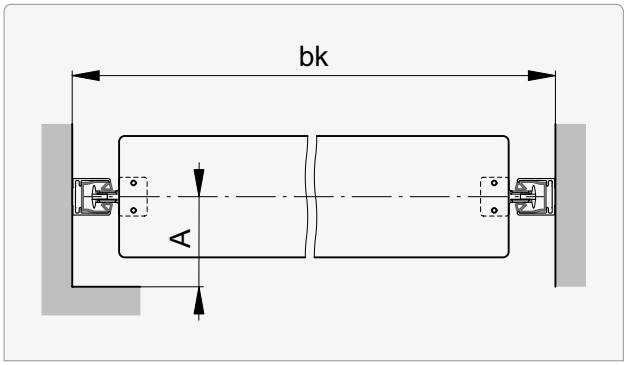

Sections | Details **191**

Values for **A**, **B** and **tn** **181**

Built-in system

Vertical section: Guide rail Fix

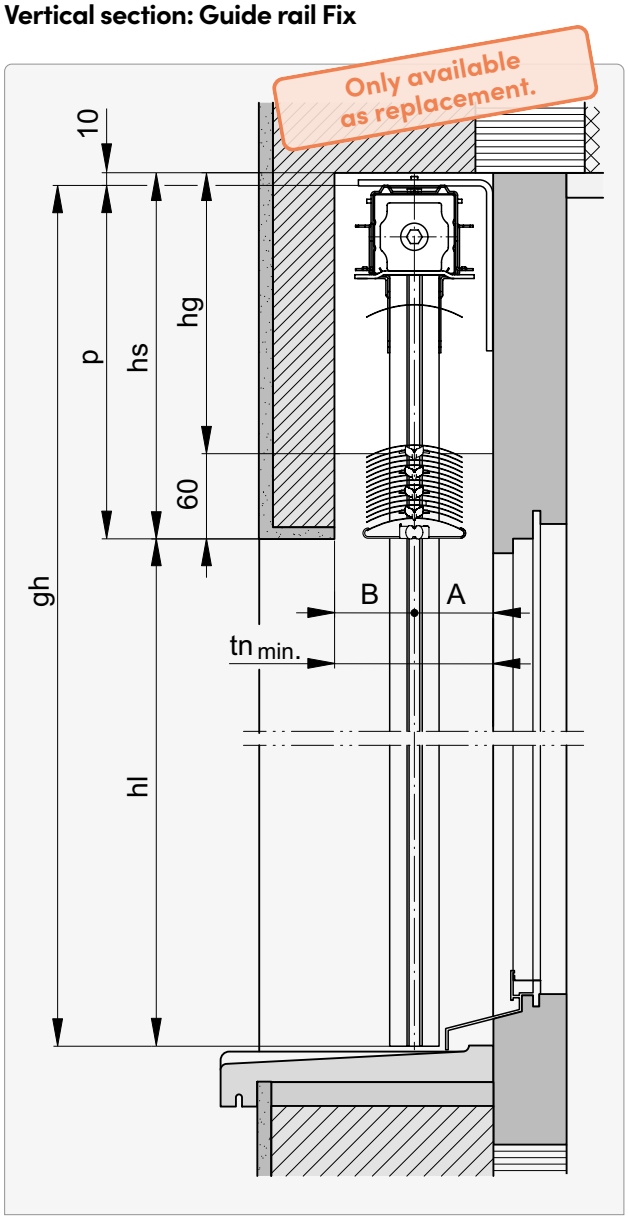

Vertical section: Cable guide

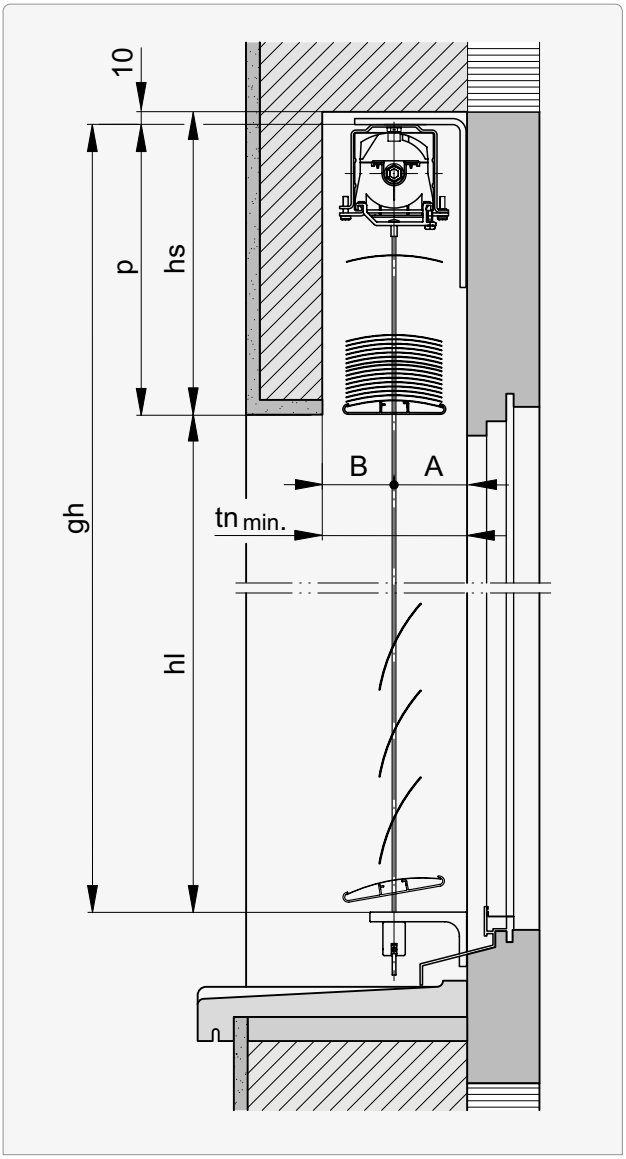

Horizontal section: Guide rail Fix

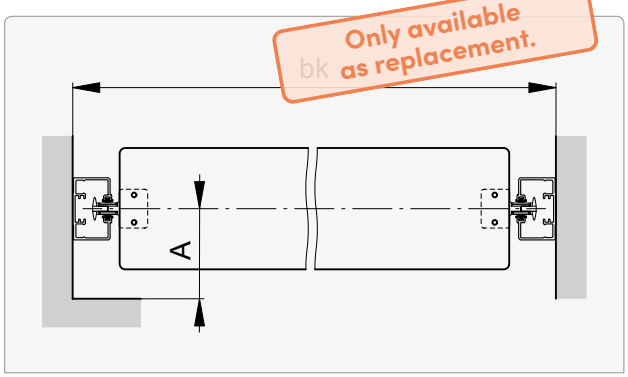

Horizontal section: Cable guide

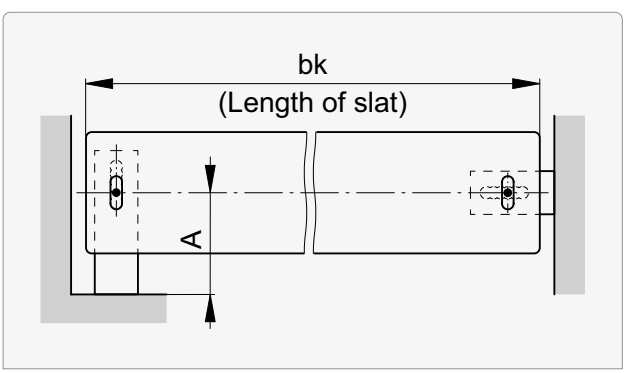

Sections | Details ..... **191** | **221**

Values for **A**, **B** and **tn** **181**

Built-in system with cover

Vertical section: Guide rail conventional

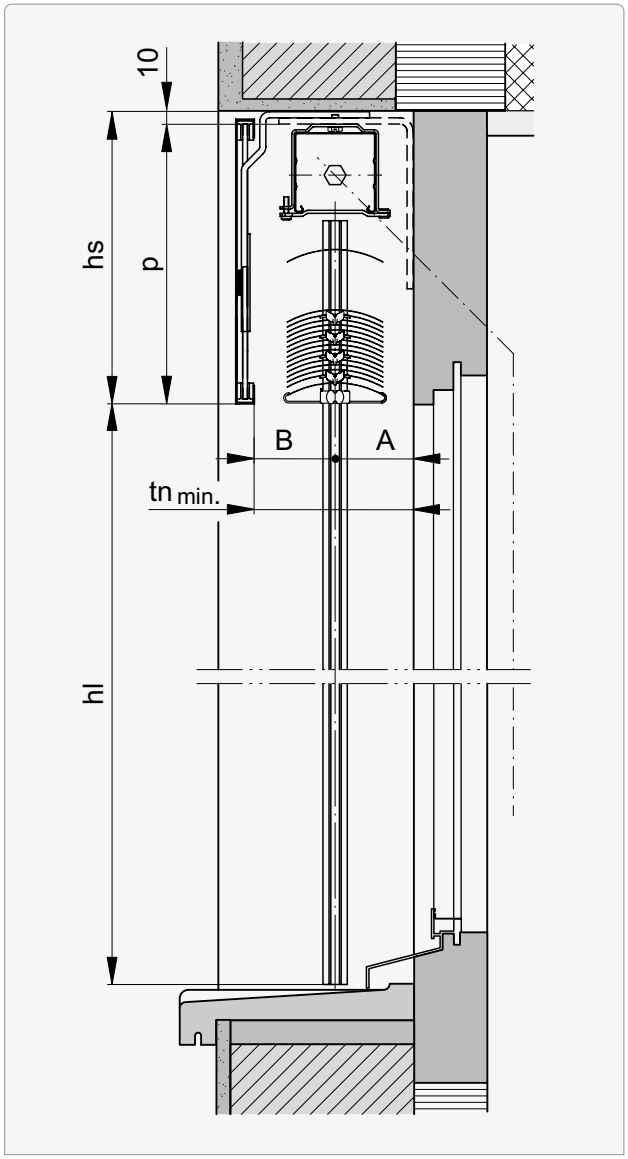

Vertical section: Guide rail Fix-L

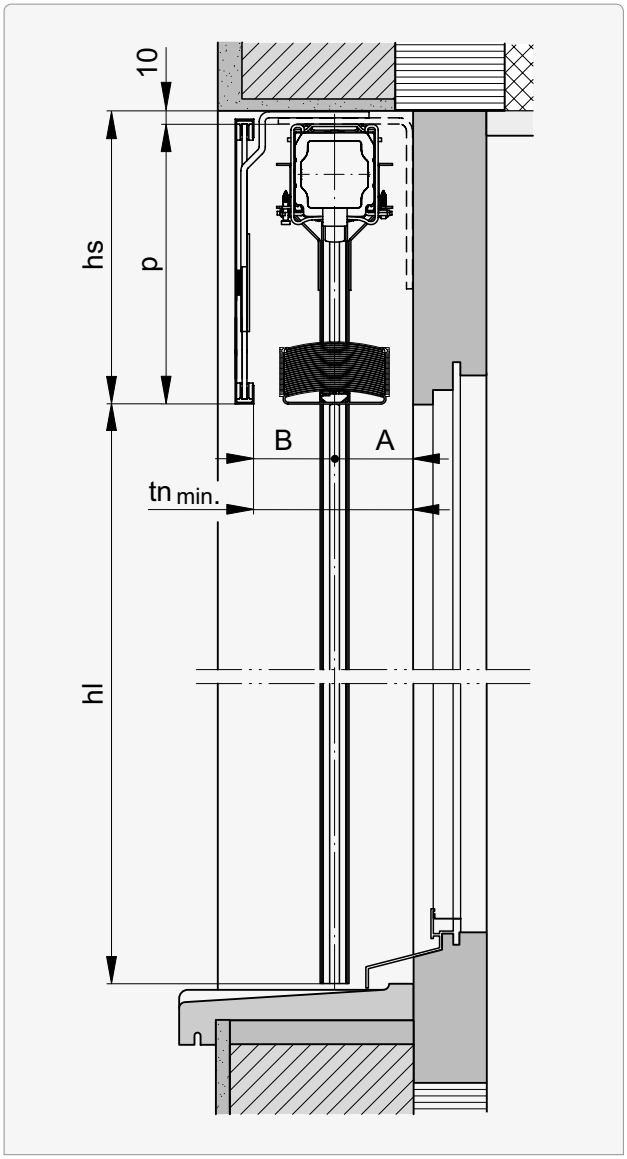

Horizontal section: Guide rail conventional

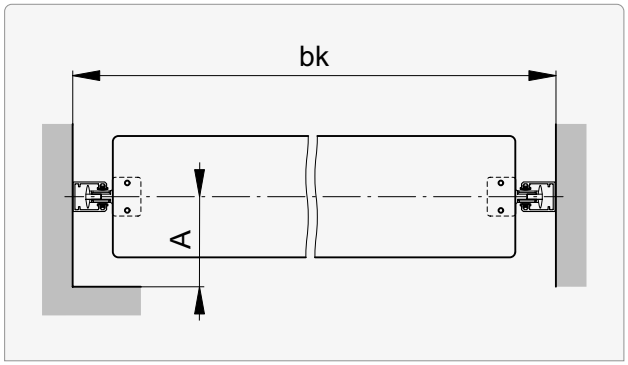

Horizontal section: Guide rail Fix-L

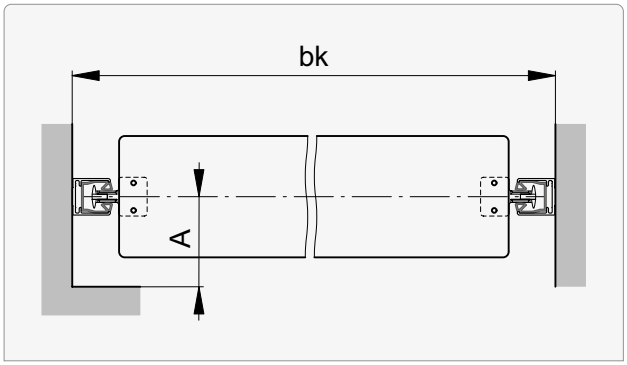

Sections | Details **191**

Values for **A**, **B** and **tn** **181**

Built-in system with cover

Vertical section: Guide rail Fix

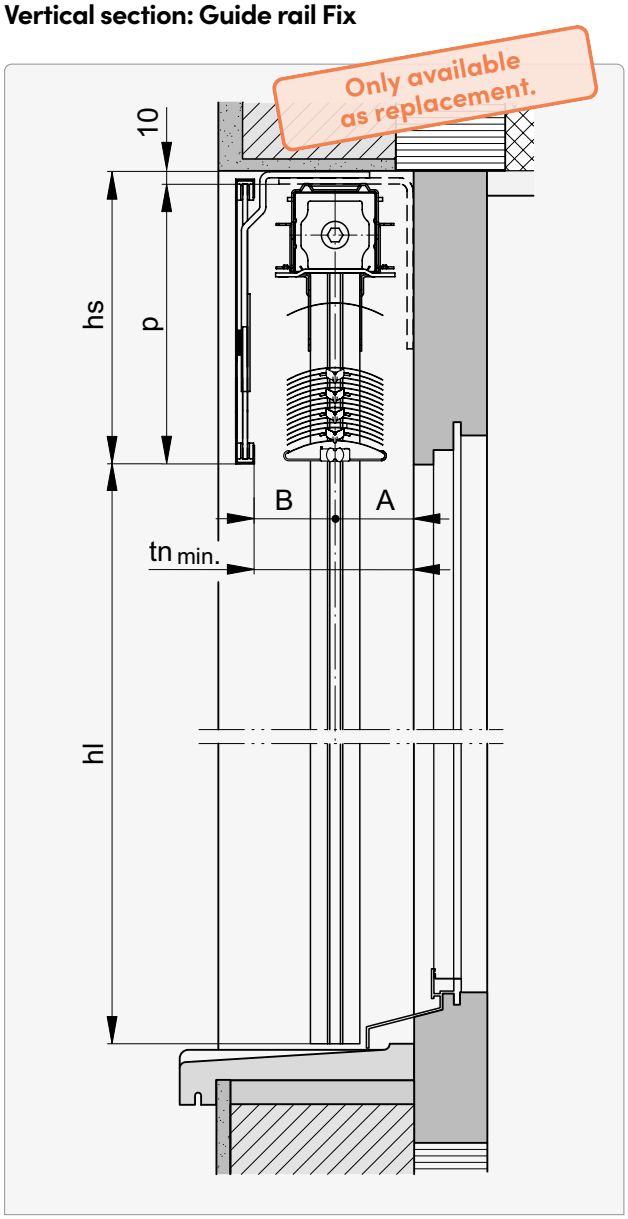

Vertical section: Cable guide

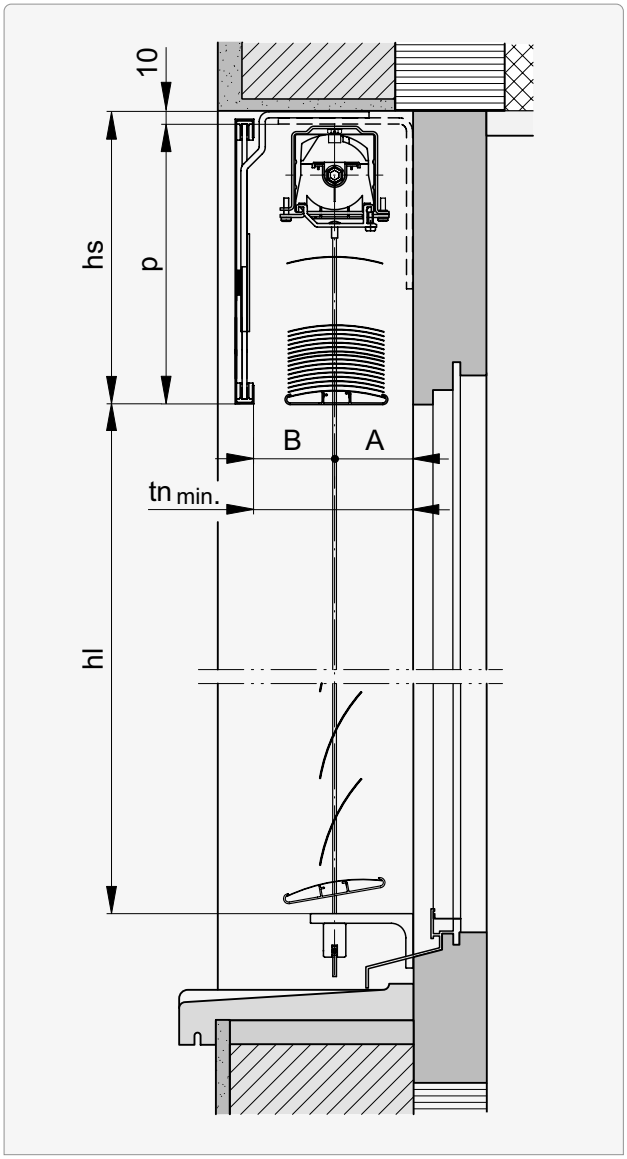

Horizontal section: Guide rail Fix

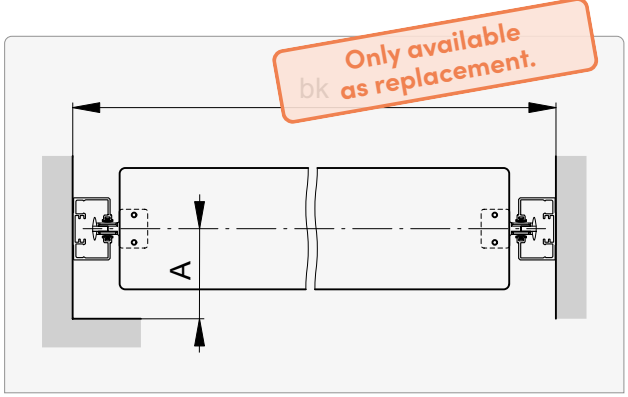

Horizontal section: Cable guide

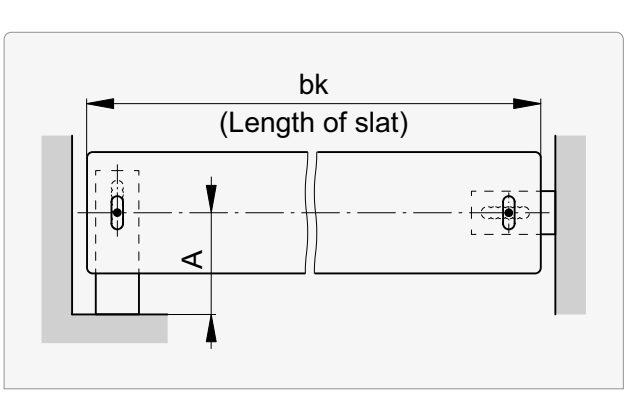

Sections | Details 191

Values for **A**, **B** and **tn** 181

Installation system with box

Vertical section: Guide rail conventional

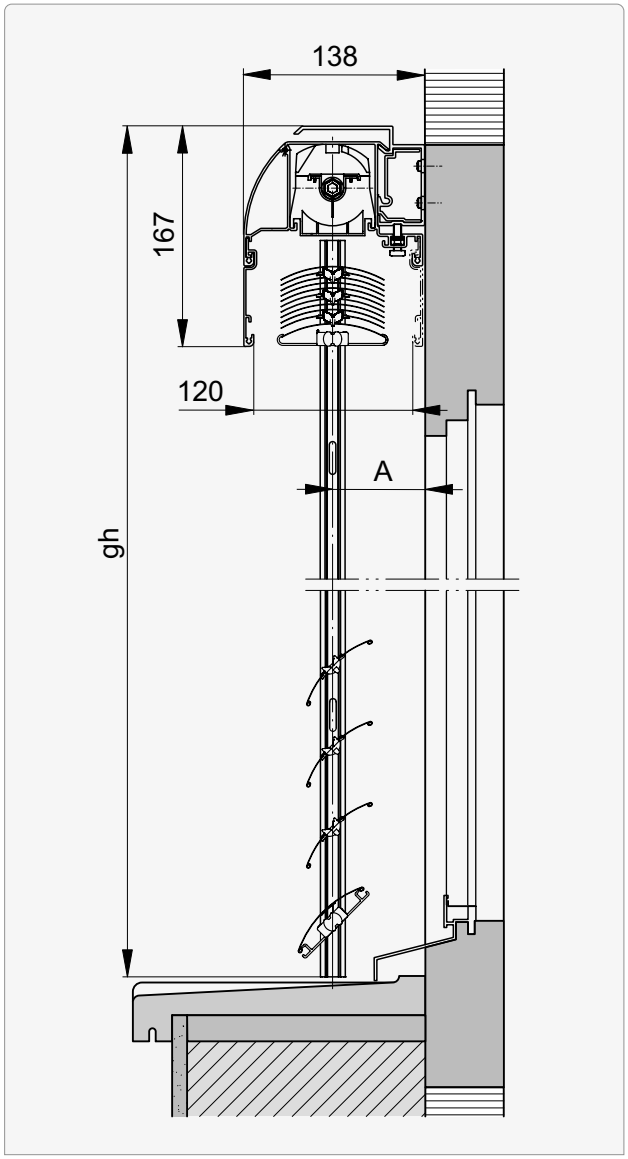

Vertical section: Cable guide

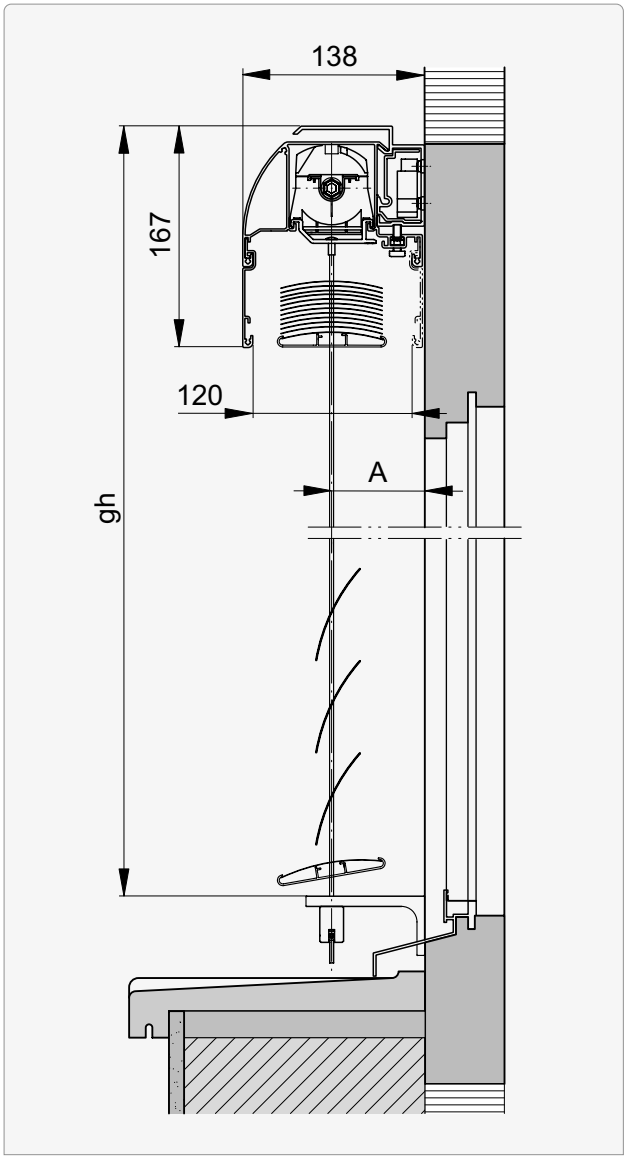

Horizontal section: Guide rail conventional

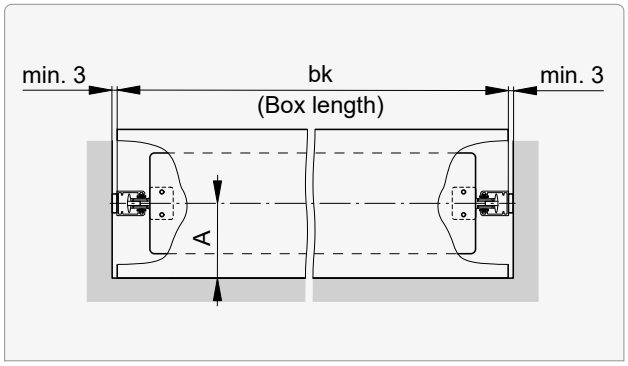

Horizontal section: Cable guide

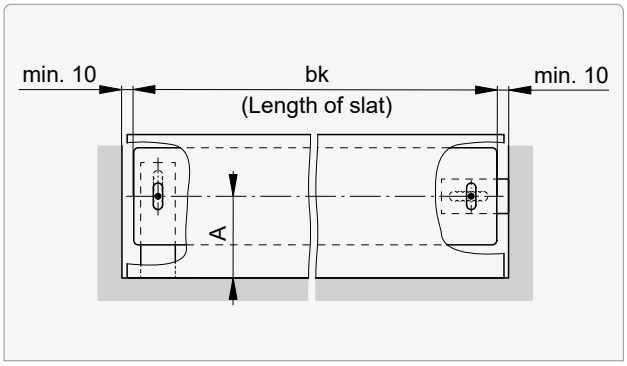

Sections | Details ..... **191** | **221**

Value for **A** **181**

Installation system with box

Vertical section: Box square

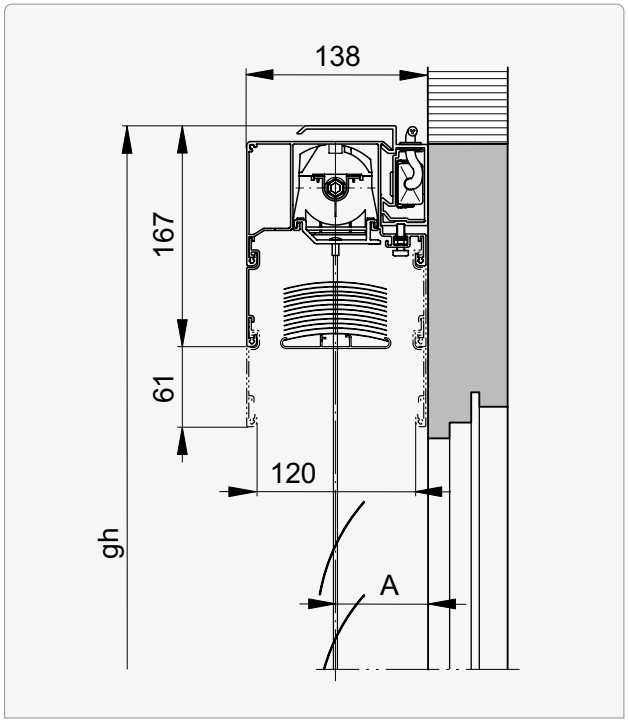

Value for **A**.....**181**

Box extensions and package projection

Aluflex® Box 60

Height (gh)	Number of extensions	Height (gh)	Projection*	Height (gh)	Projection*
700 ... 1100	1	2501 ... 2600	5	3501 ... 3600	55
1101 ... 2500	2	2601 ... 2700	10	3601 ... 3700	60
		2701 ... 2800	15	3701 ... 3800	65
		2801 ... 2900	20	3801 ... 3900	70
		2901 ... 3000	25	3901 ... 4000	75
		3001 ... 3100	30	4001 ... 4100	80
		3101 ... 3200	35	4101 ... 4200	85
		3201 ... 3300	40	4201 ... 4300	90
		3301 ... 3400	45	4301 ... 4400	95
		3401 ... 3500	50	4401 ... 4500	100

Aluflex® Box 80

Height (gh)	Number of extensions	Height (gh)	Projection*	Height (gh)	Projection*
700 ... 1800	1	4101 ... 4200	2	4301 ... 4400	8
1801 ... 4100	2	4201 ... 2300	5	4401 ... 4500	11

* Slat package not covered (package projection)

Header dimensions | Heights of package

Aluflex® 60

hl →I	P min.	hs[1]	hl →I	P min.	hs[1]
600	146	160	**2600**	234	255
700	150	165	**2700**	239	260
800	155	170	**2800**	243	260
900	159	175	**2900**	247	265
1000	164	180	**3000**	252	270
1100	168	185	**3100**	256	275
1200	173	190	**3200**	261	280
1300	177	190	**3300**	265	285
1400	181	195	**3400**	269	290
1500	186	200	**3500**	274	290
1600	190	205	**3600**	278	295
1700	195	210	**3700**	283	300
1800	199	215	**3800**	287	305
1900	203	220	**3900**	291	310
2000	208	225	**4000**	296	315
2100	212	230	**4100**	300	320
2200	217	235	**4200**	305	325
2300	221	240	**4300**	309	325
2400	225	245	**4400**	313	330
2500	230	250	**4500**	318	335

Version	tn min.	A	B
Built-in system	100*	50	50
Installation system (Box)		70	

Aluflex® 80

hl →I	P min.	hs[1]	hl →I	P min.	hs[1]
600	135	160	**2600**	190	205
700	138	160	**2700**	193	205
800	140	160	**2800**	196	210
900	143	160	**2900**	199	210
1000	146	160	**3000**	201	215
1100	149	160	**3100**	204	215
1200	151	165	**3200**	207	220
1300	154	165	**3300**	210	225
1400	157	170	**3400**	213	225
1500	160	175	**3500**	215	230
1600	163	175	**3600**	218	230
1700	165	180	**3700**	221	235
1800	168	180	**3800**	224	235
1900	171	185	**3900**	226	240
2000	174	185	**4000**	229	240
2100	176	190	**4100**	232	245
2200	179	190	**4200**	235	250
2300	182	195	**4300**	238	250
2400	185	200	**4400**	240	255
2500	188	200	**4500**	243	255

Version	tn min.	A	B
Built-in system	120*	60	60
Installation system (Box)		70	

[1] If **surface area > 12 m²** or **bk > 4000**, the **end rail type 20 (reinforced)** is required. Then **hs = hs + 10**.
With gearbox in slat area: **hs + 20**.
For both box versions: **hs = hs + 7**.

* + possible addition for protruding weatherboard or doorknobs.
Valid for installation of Aluflex® conventional and Fix and also Aluflex® with tensioning cable guide.

Header dimensions are approximate values which may exhibit **negative or positive deviations** depending on the technical circumstances. **A dimensional tolerance of ±5 mm** is observed for the header height.

Slat profiles

Aluflex® 60

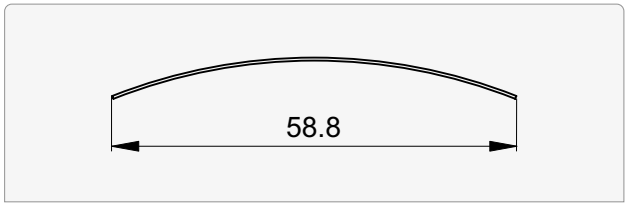

Aluflex® 80



End rails

Aluflex® 60

Type 10

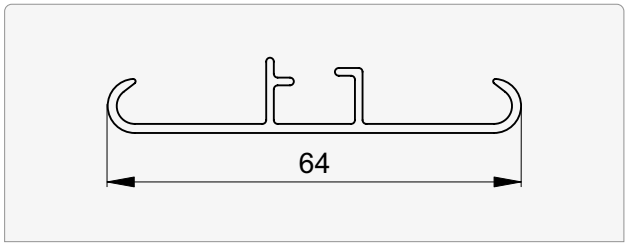

Type 20 (reinforced)

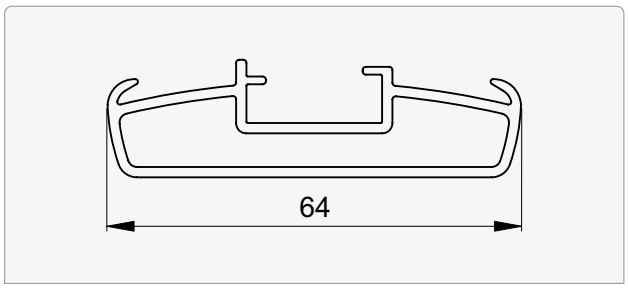

Aluflex® 80

Type 10

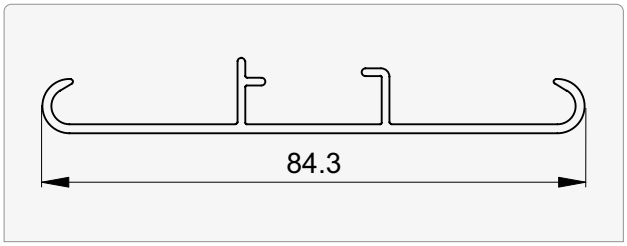

Type 20 (reinforced)

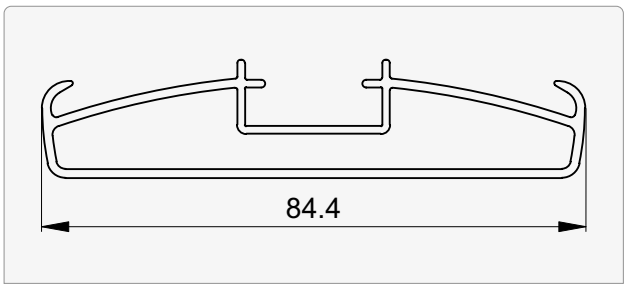

If **surface area > 12 m²** or **bk > 4000**, the **end rail type 20 (reinforced)** is required.

Beginning distance | Slot spacing

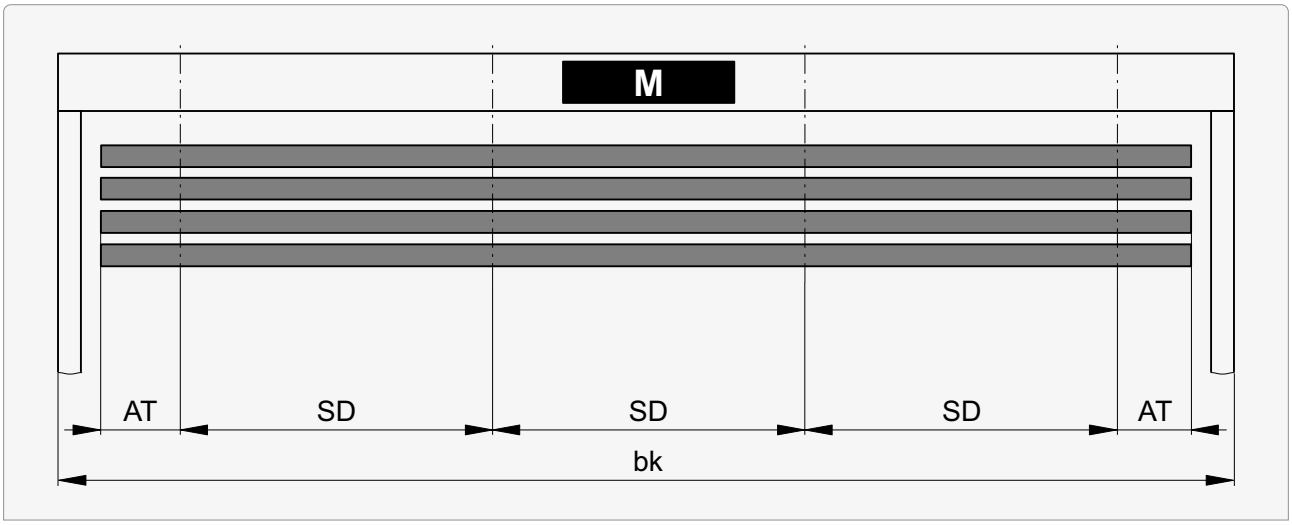

bk	AT min.		SD min.	SD max.
≤610	Conventional	50		
	Fix	60		
	Fix connected	80		
	Cable	67		
611 ... 1250	Conventional		250*	1000*
	Fix	100		
	Fix connected			
	Cable	117		
>1250	Conventional			
	Fix	200		
	Fix connected			
	Cable	217		

* Standard slot spacing machine fabrication

Deviations from the standard are posible when:

Deviation	Correction
MBMA+ < 40	AT
Support loading too high	AS
Slot spacing < 250	AT + AS
With motor	AT + AS

AT Beginning distance
Distance from beginning of slat to centre of bearing

SD Slot spacing
Distance from centre of bearing (slot) to centre of bearing (slot)

Housing fastening

Transverse and holding force per fastening point at least 2200 N.

At top NO

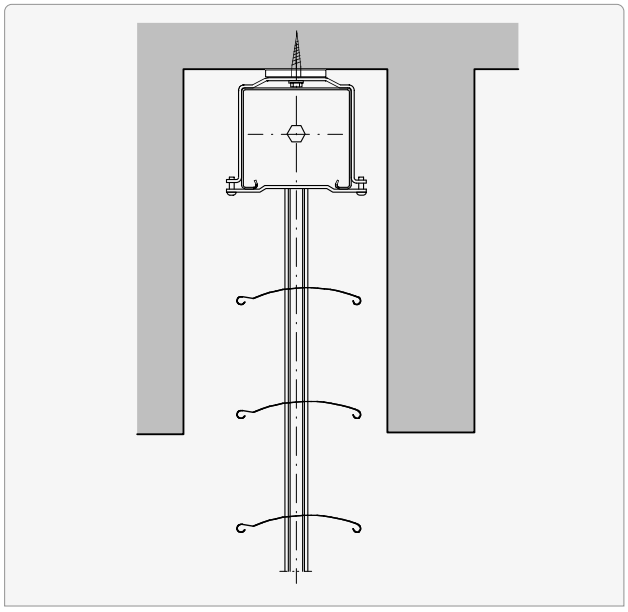

Box support for type KT, for small headers*

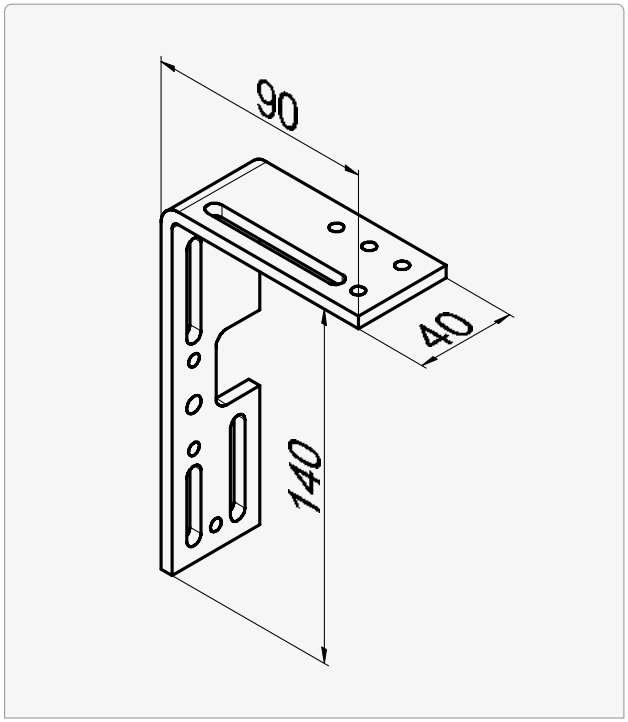

A
140

Box support KT

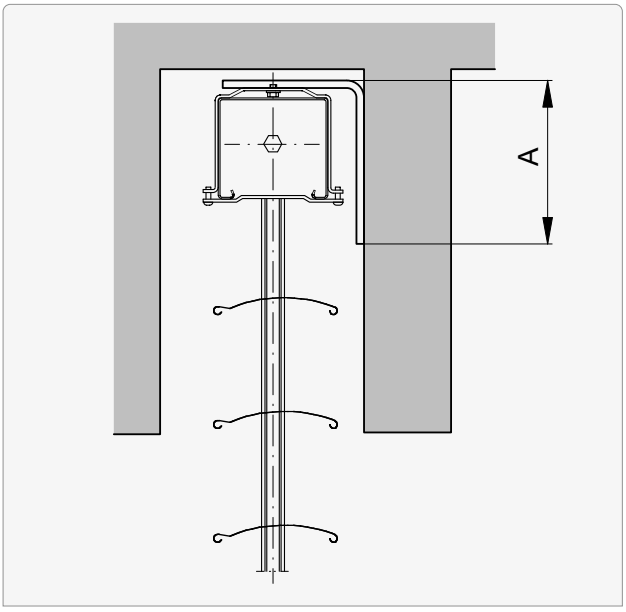

Box support for type KT

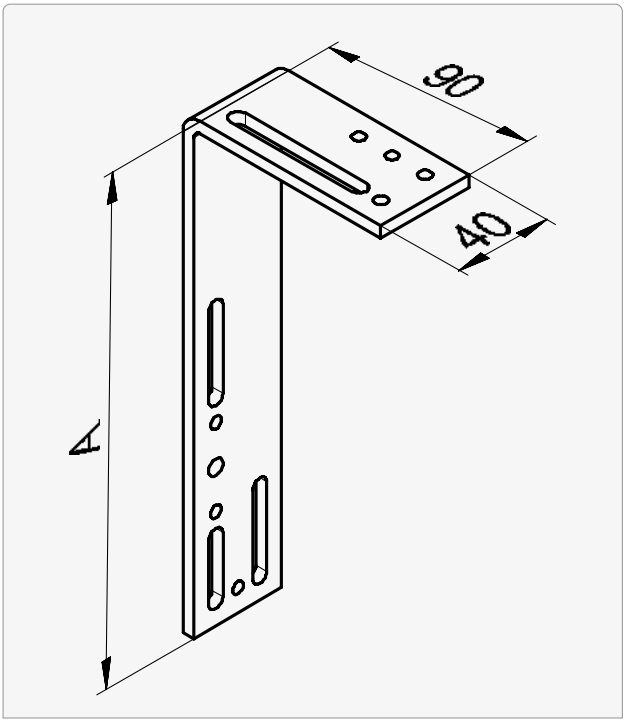

A
200
260

* Header 100

Housing fastening

Transverse and holding force per fastening point at least 2200 N.

Double box support DR

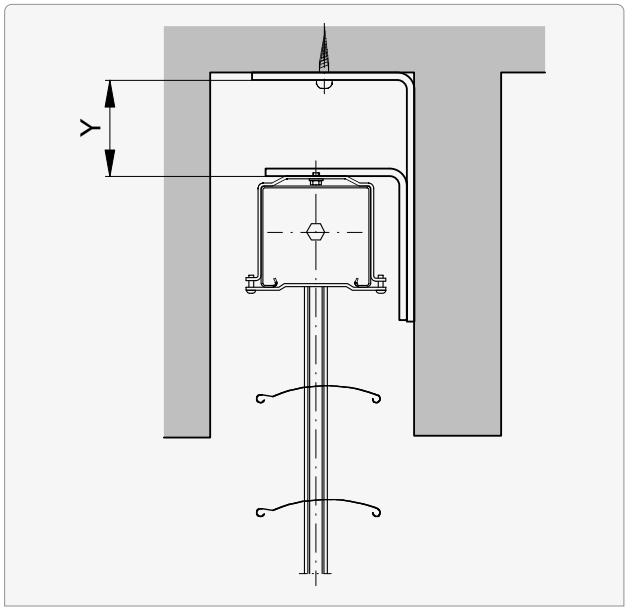

Double box support for type DR

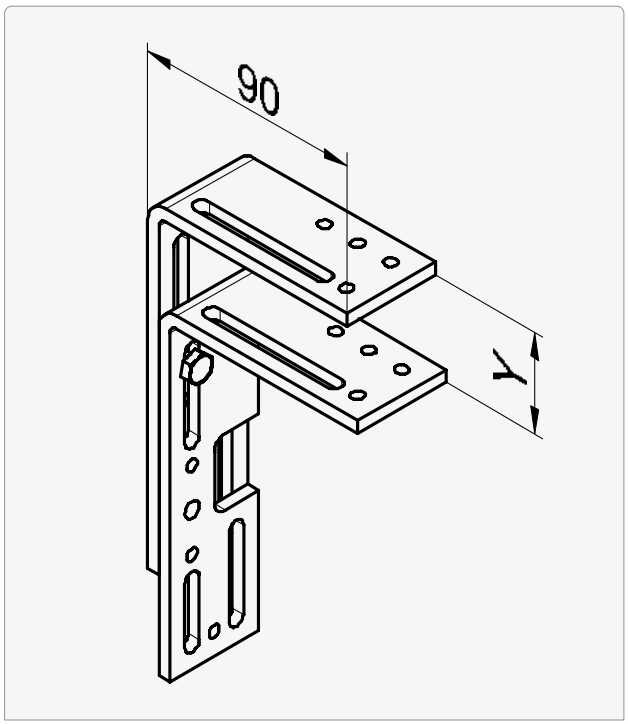

Y
10 ... 75
75 ... 135
135 ... 200

Gallery clip GB

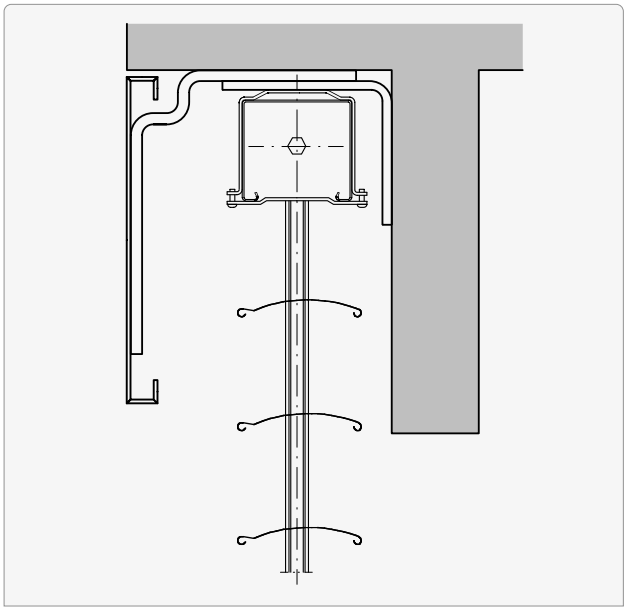

Gallery clip for type GB

See additional documentation at the Griesser Download Center:

Tech Guide "Covers"

Number of box supports

Conventional and cable guides

bk	Quantity
≤ 2500	2
2501 … 3500	3
3501 … 4500	4
> 4500	5

Fix guides | Additional fastenings

bk	Quantity
≤ 2500	0
2501 … 3500	1
> 3500	2

Fixation for box base profile

Transverse and holding force per fastening point at least 2200 N.

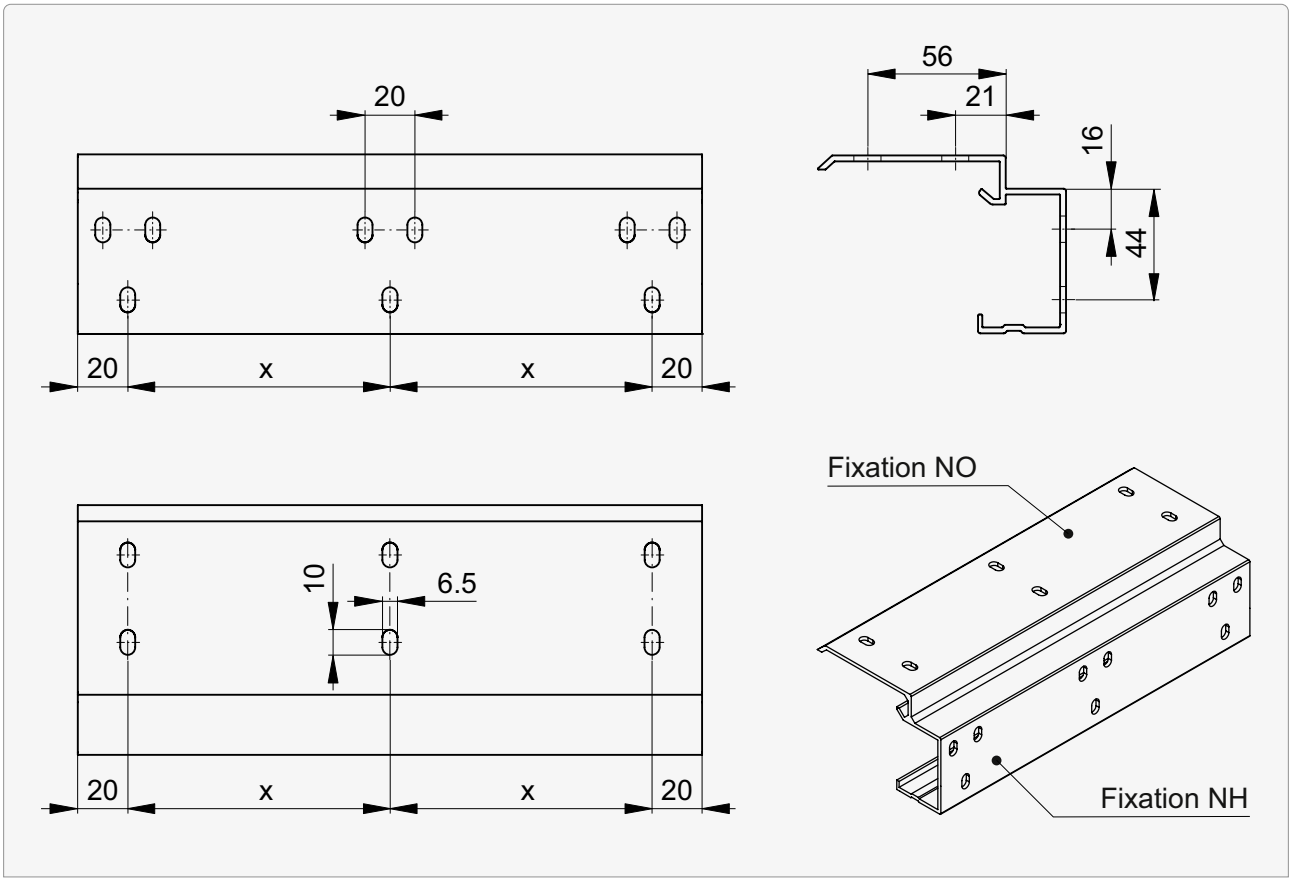

Number of fixation points

bk	Number of fixation points
≤2000	2
2001 ... 3000	3
3001 ... 4000	4
>4000	5

Technical data of motors

Performance characteristics

Type		Limit switch Type	Number of	M [Nm]	n [1/min.]	P [W]	I [A]
Standard							
Elero							
ES...	06.01	mechanical	2	6	26	110	0.50
	09.01			9		170	0.75
E0...	20.01			20		190	1.05
ES...	06.51	mechanical	3	6	26	110	0.50
	09.51			9		170	0.75
E0...	20.51			20		190	1.05
Option							
Somfy							
SH...	06.01	mechanical	2	6	24	95	0.40
	10.01			10		110	0.65
	18.01			18		155	1.00
SW...	06.01	electronic	2	6	24	95	0.40
SI...	10.01			10		110	0.65
SR...	18.01			18		155	1.00
Elero Comfort							
ECM...	06.01	electronic	2	6	26	115	0.50
	09.01			9		156	0.68
	06.51		3	6		115	0.50
	09.51			9		156	0.68
ECB...	06.01	electronic	2	6	26	115	0.50
	09.01			9		156	0.68
	06.51		3	6		115	0.50
	09.51			9		156	0.68

I Current consumption
M Torque
n Rotational speed
P Power consumption

Options

Feedthroughs with eyelets

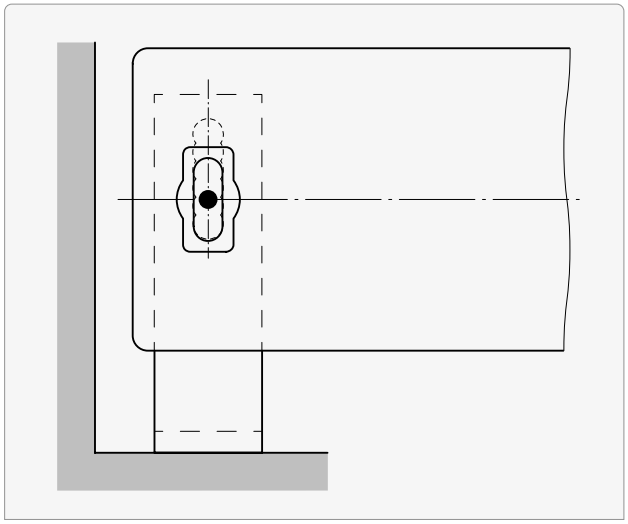

Guide rails

Type E | Single guide

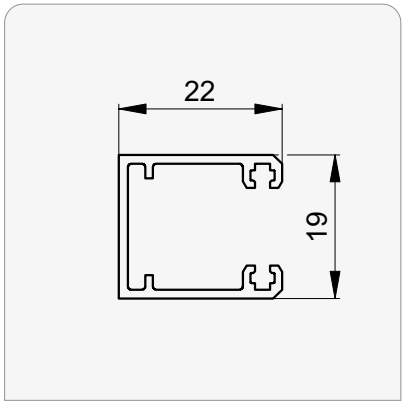

Type L | Fix guide

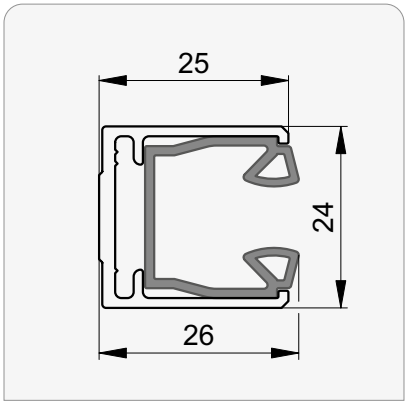

Type F | Fix guide

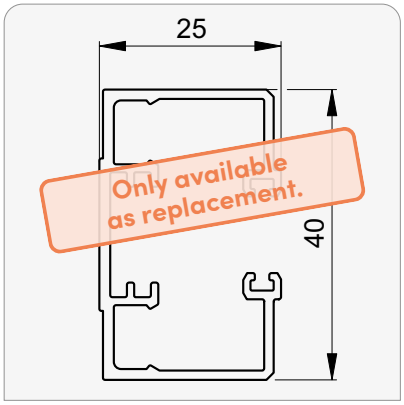

Type D | Double guide

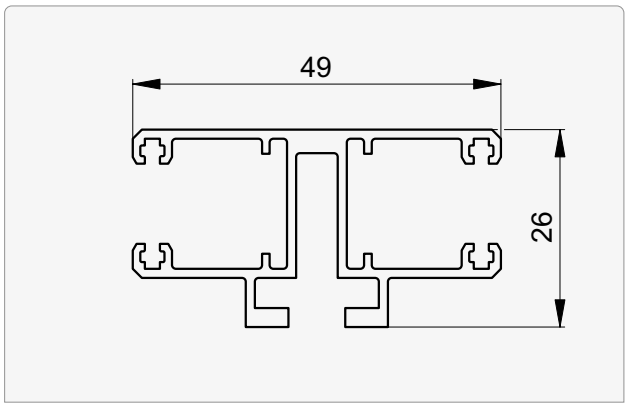

Special guide fastening required

Type C | Single guide

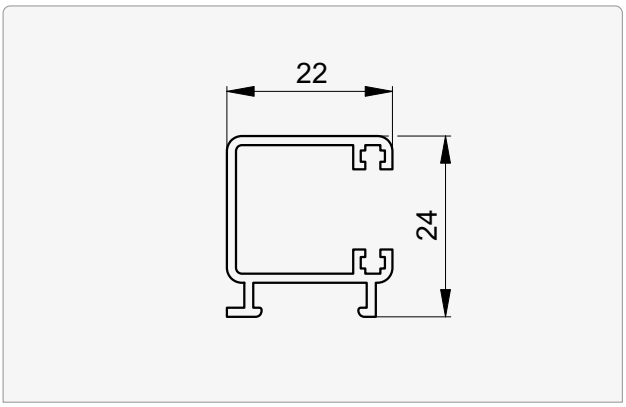

Type R | Curved double guide

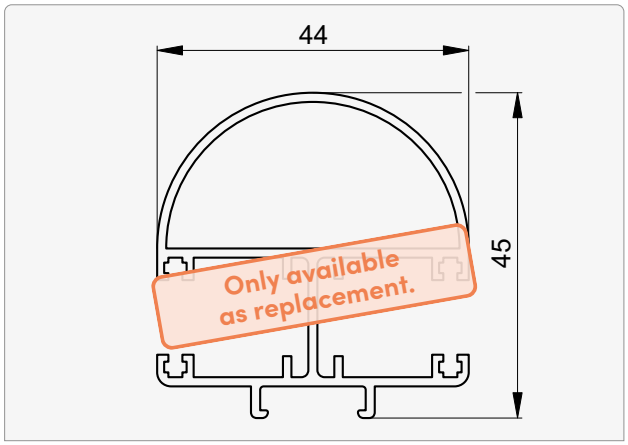

Type T | Double guide

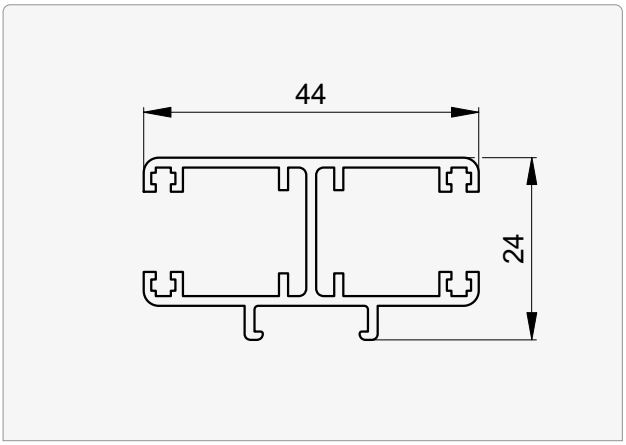

- Distance between guides **FD** **219**
- Fastening points **217**
- Guide extension and facet **209**
- Guide rail fastenings **201**
- Guide rail cut-outs in windowsill area **212**
- Installation window **213**
- Integrated guides **200**

Sections | Details

Horizontal section: Guide rail conventional

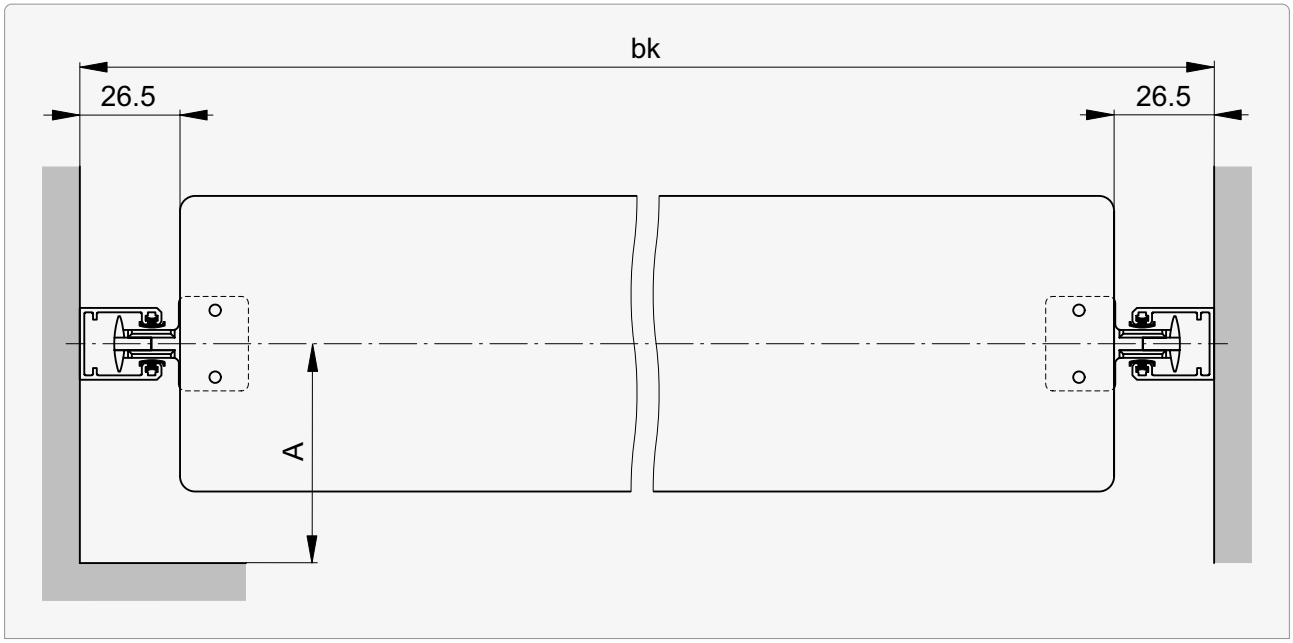

Horizontal section: Guide rail Fix-L

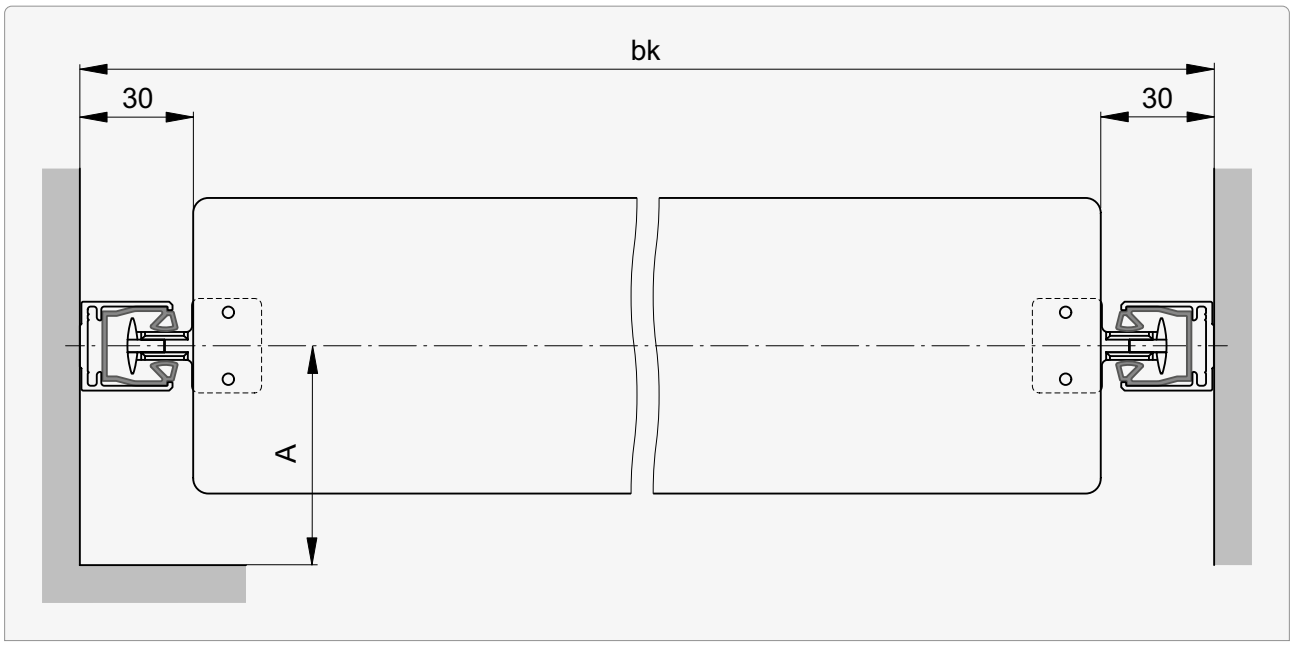

Value for **A**.....**181**

Sections | Details

Horizontal section: Guide rail Fix

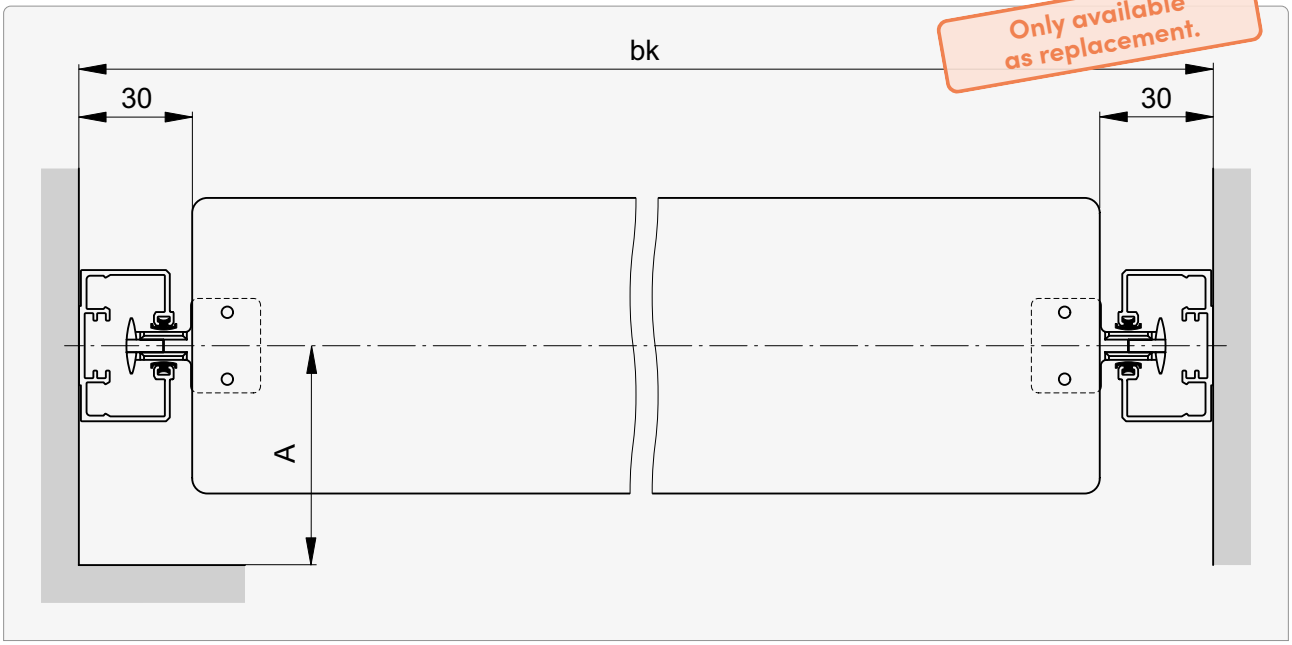

Horizontal section: Box

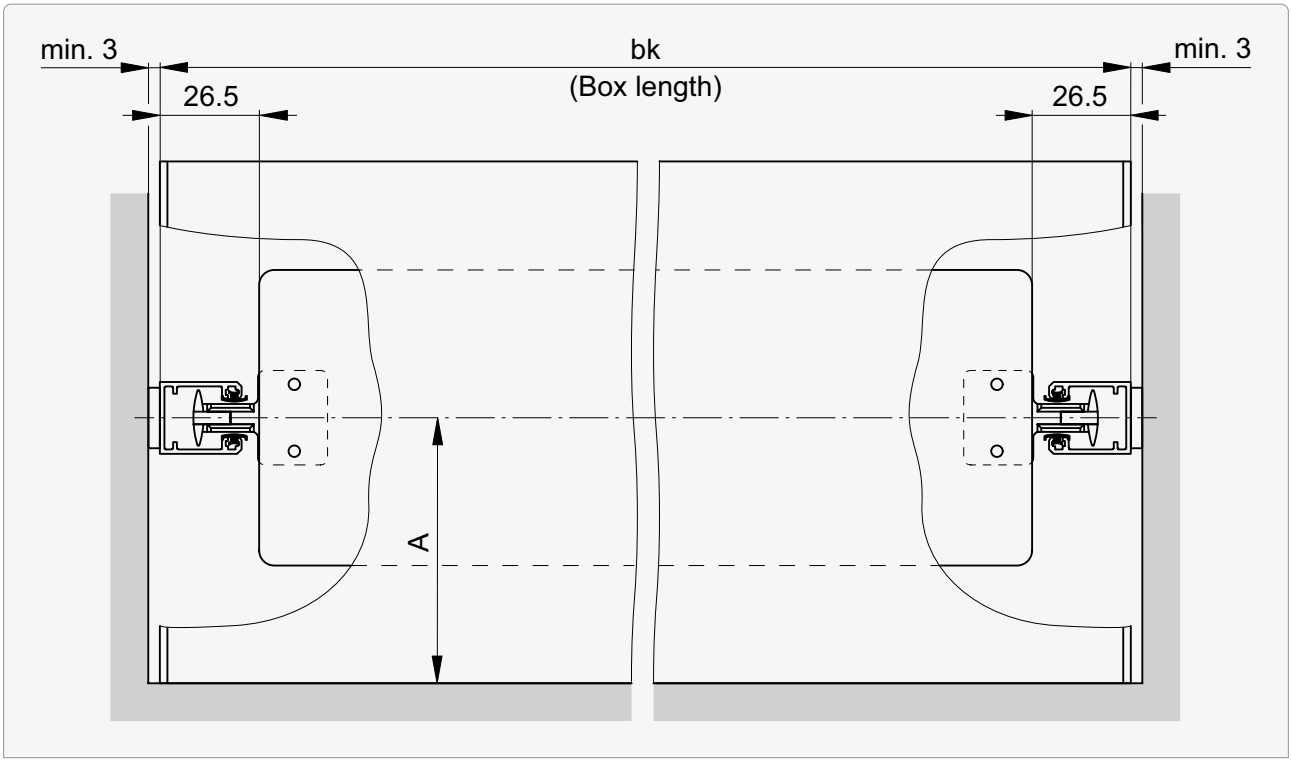

Value for **A**.....**181**

Sections | Details

Detail at bottom

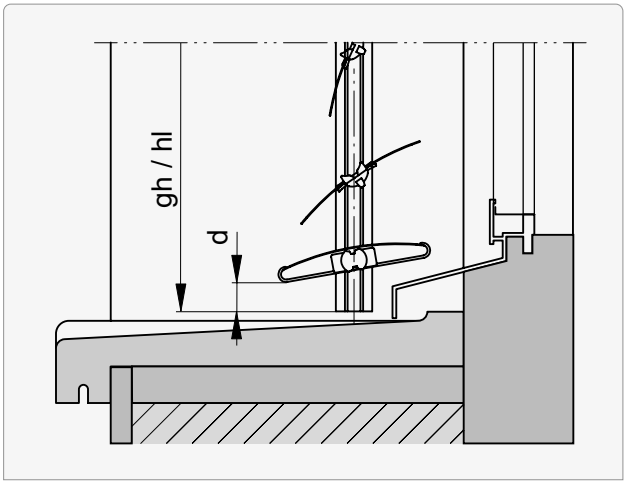

d (d - dimension)
min. 10 +5/–3

d - dimension may vary with different blind dimensions.

Sections for crank drive (MBMA)

outside bk

Conventional

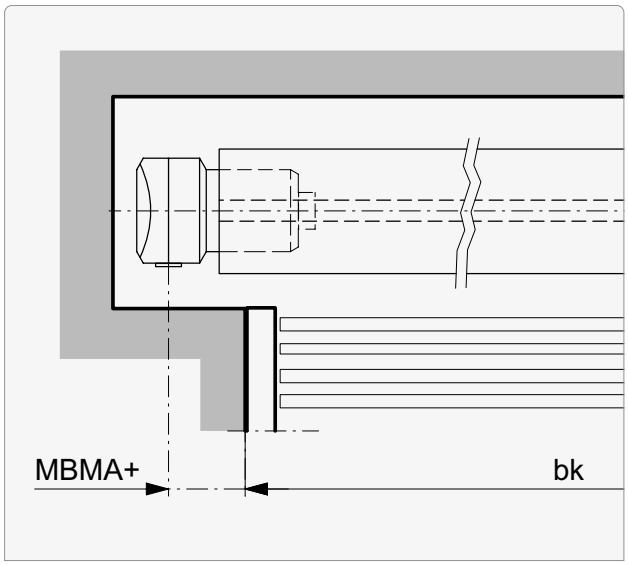

Self-supporting (Fix)

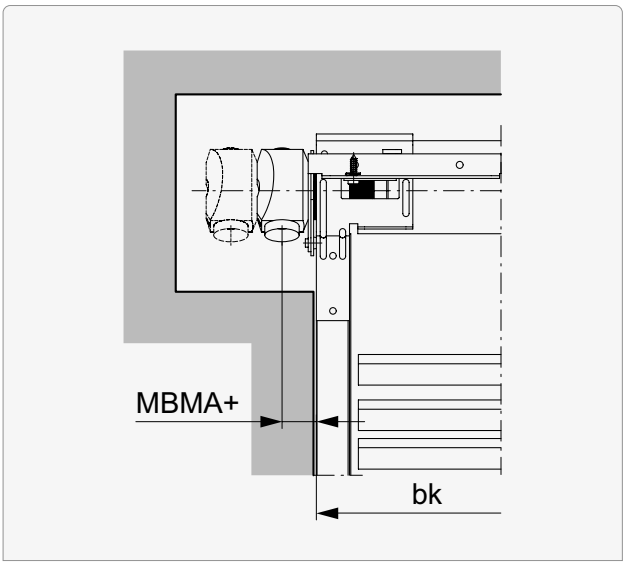

within bk

Conventional

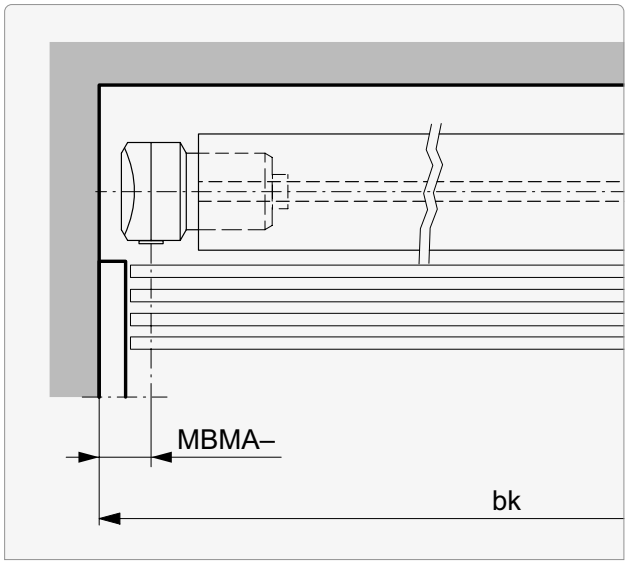

Self-supporting (Fix)

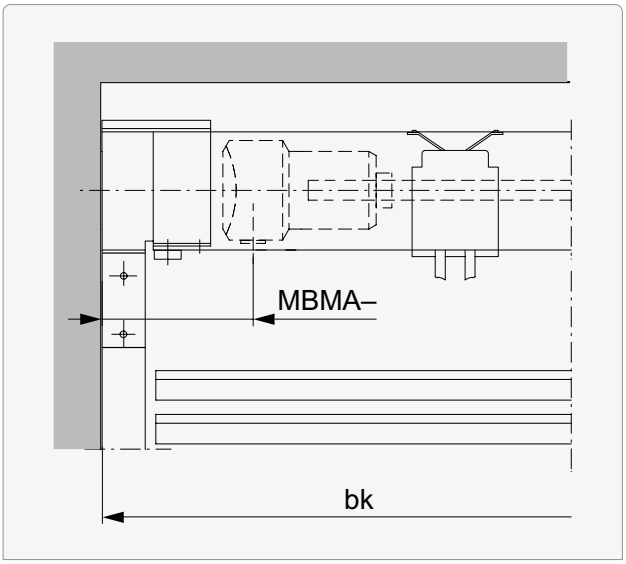

Version	MBMA+	MBMA–
Conventional	0 ... 999	0 ... (bk / 2)*
Self-supporting (Fix)	26 ... 125 (10 ... 25)[1]	90 ... (bk / 2)

[1] for reverse mounted gearbox

* ≤30: Gearbox niche required

Additional cables

Additional cables must be fitted for a bk > 2500 and in locations which are exposed to high wind.
The dimensions **P1** and **P2** are **measured from the left from bk** and **must be noted on the dimensions sheet.**
P2 does not apply for the first additional cable.

If the additional cables **are installed in the windowsill**, you must plan for **an excess guide rail length of min. 60 mm**.
The **end rail** is then **70 mm above the windowsill**.

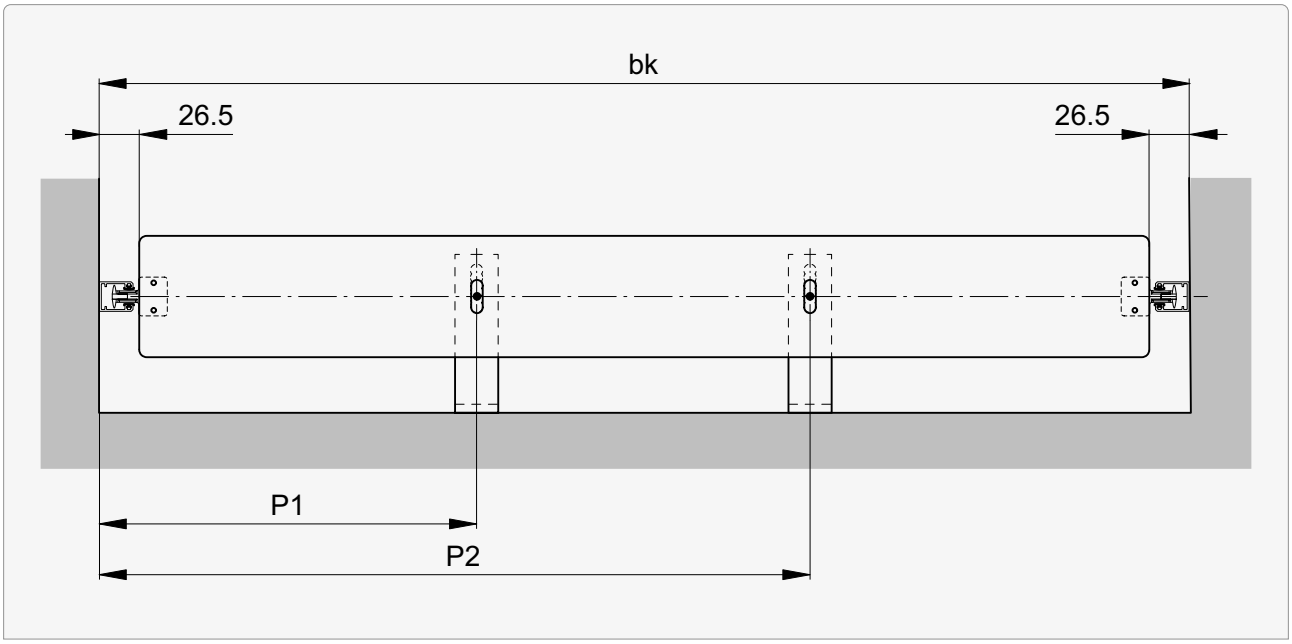

P1 Position of first cable or cable on the left

P2 Position of cable on the right

Number of additional cables

If no information is provided for P1 or P2, they are positioned according to the following table.

Width max. (bk)	Number of additional cables	P1	P2
≤ 2500	0	–	–
2501 … 3800	1	(bk / 2)	–
> 3800	2	(bk / 3)	2 (bk / 3)

Cable fastenings **228**

Vertical connections | Standard motor position

Number of bearings

Aluflex® 60

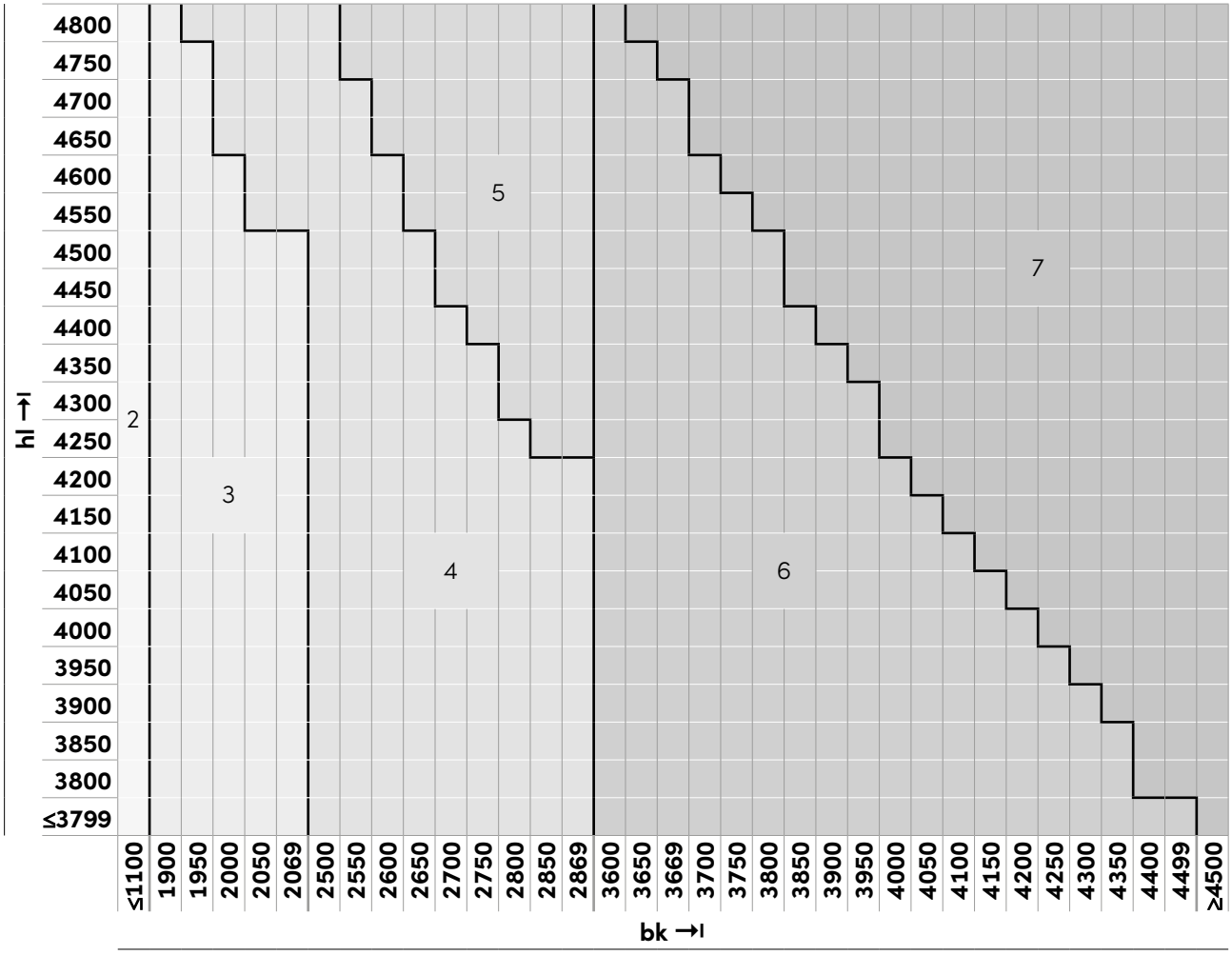

Standard motor position 198

Vertical connections | Standard motor position

Number of bearings

Aluflex® 80

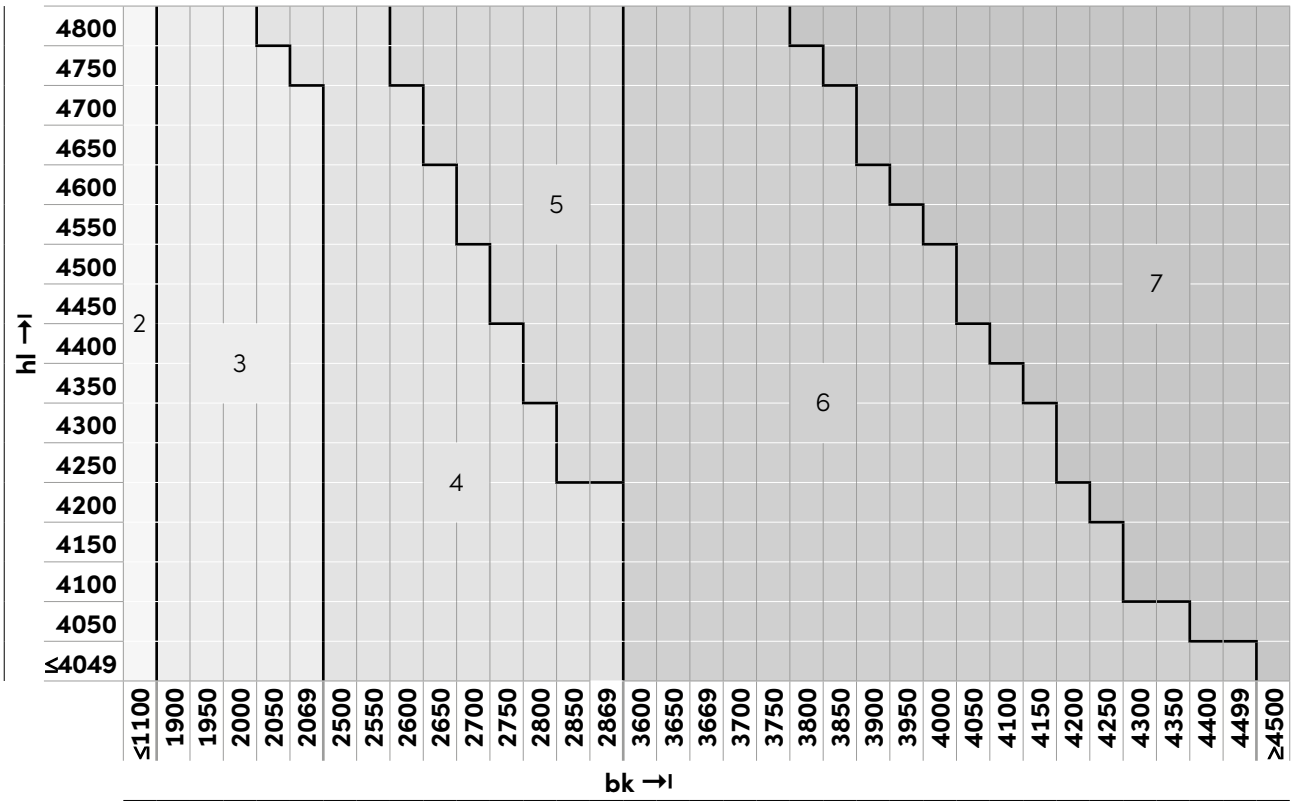

Standard motor position 198

Vertical connections | Standard motor position

Standard motor position

Number of bearings	Standard motor position
2	
3	
4	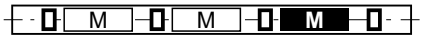
5	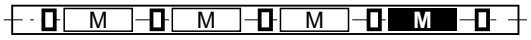
6	
7	

▯ Bearing
M Standard motor position
M Possible motor position (on request)

Guide rail installation (principle)

Guides attached (to soffit) | Type A

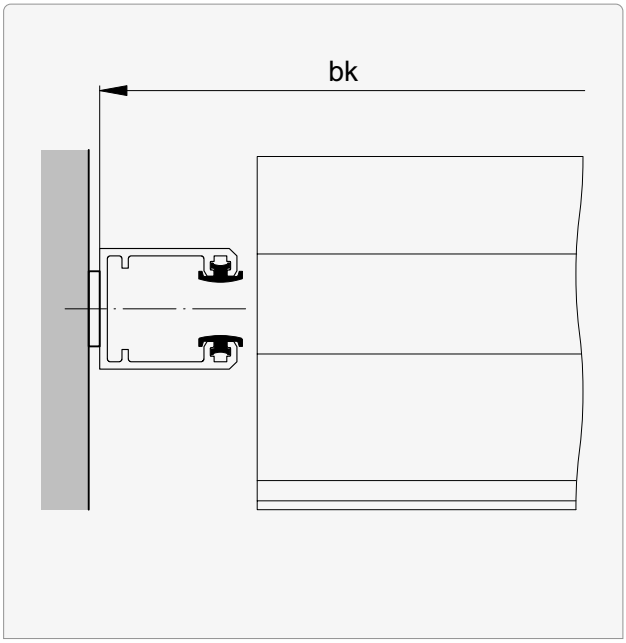

Guides suspended

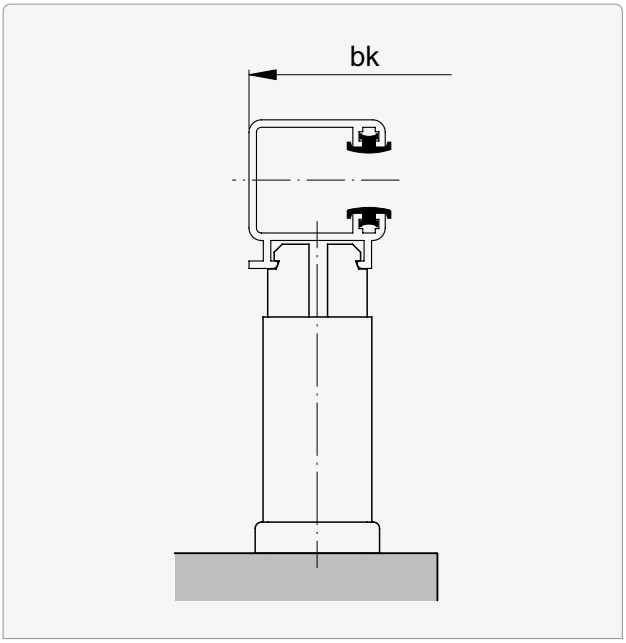

Observe possible guide rail spacer for **bk**.
Standard: 2 mm

Guide rail installation (principle)

Guides recessed

***Type F | Without guide cut-out:**
Only possible if curtain can be retracted from below.

Type E | F* | L

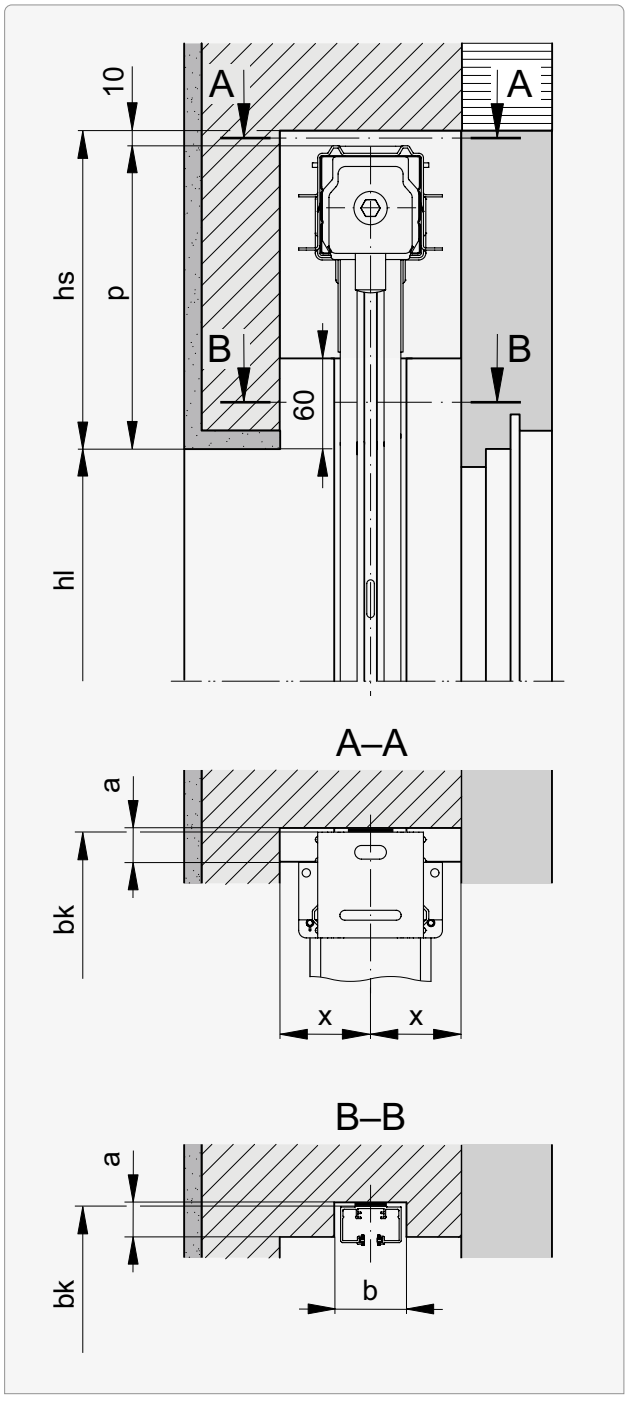

Type E

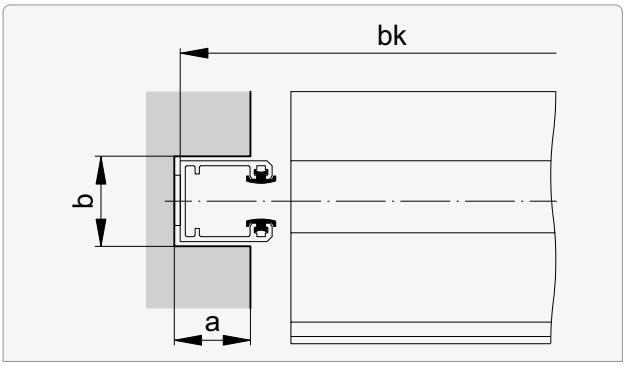

Type F*

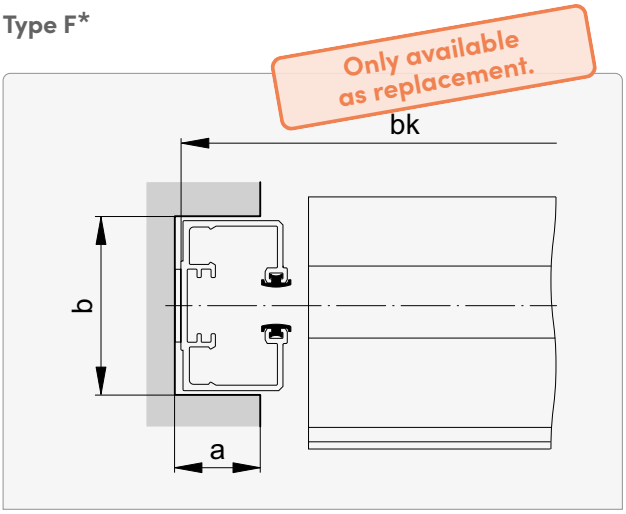

Type L

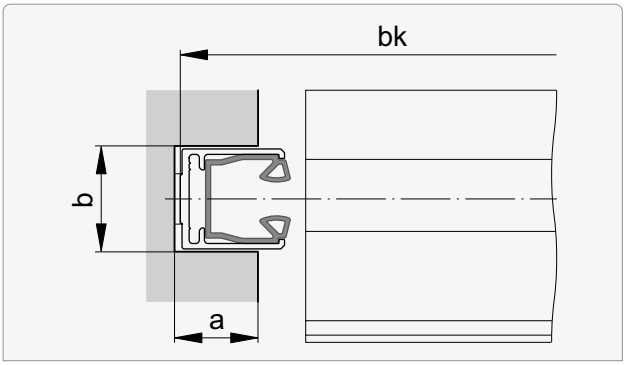

Product | Version	x min.
Aluflex® 60 Fix	50
Aluflex® 80 Fix	60

Type	a	b
E	≤18	≥21
F*	≤20	≥42
L	≤24	≥25

20261109

Guide rail fastenings (principle)

Overview

Type														
A	B	Bd	C	Cd	E	F	G	H	Kv	M	T	Tv	V	Wv
●	●	●	●	●	●	●	–	–	○[1]	○[2]	●	●	●	●

● applicable without restrictions

○ applicable with restrictions:
[1] only with guide **type C | T | R**
[2] only with guide **type E**

A Soffit installation

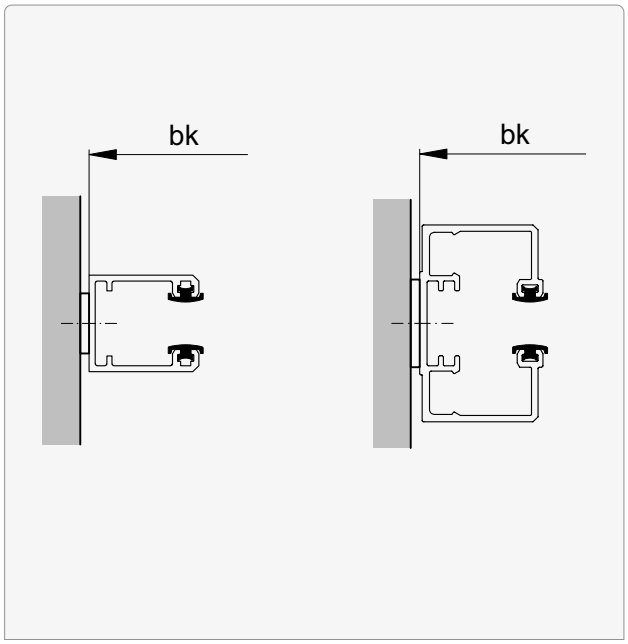

Transverse and holding force per fastening point at least 1000 N.

Observe possible guide rail spacer for **bk**.
Standard: 2 mm

Guide rail fastenings (principle)

B Installation with fastening bracket

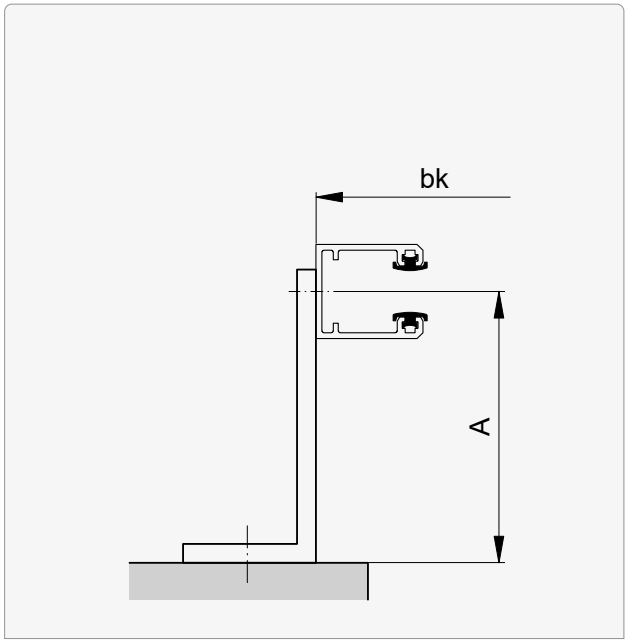

Bracket outwards

C Installation with fastening bracket

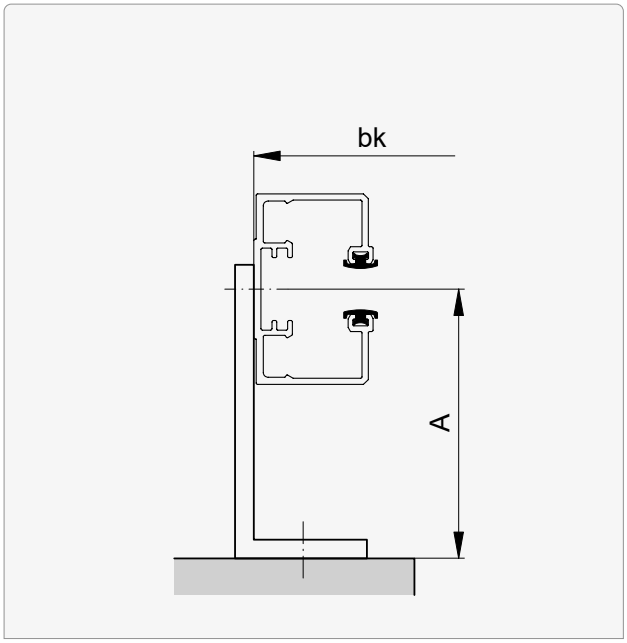

Bracket inwards

Fastening bracket for types B and C

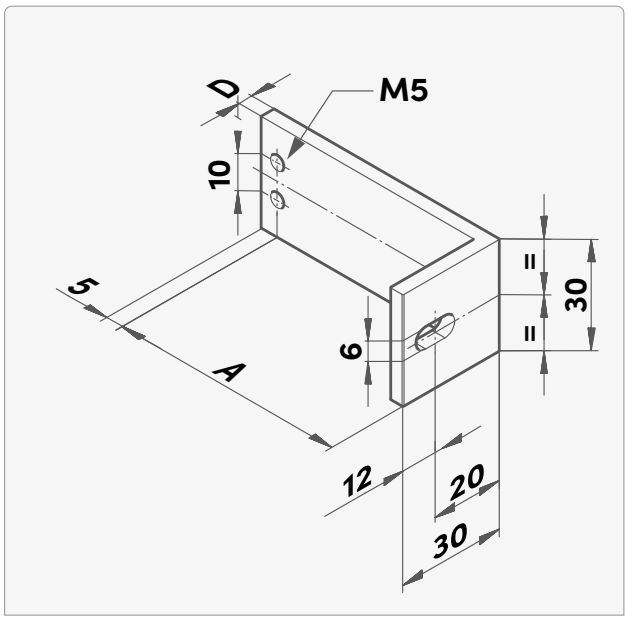

A*	D
20 ... 115	4

For suspended guide rails always with **brackets 70 mm**.

Transverse force at least 300 N and holding force:

A*	bk < 1.5 m	bk < 2.5 m	bk < 3.5 m	bk < 4.5 m
0 ... 45	300 N	350 N	550 N	800 N
46 ... 90	500 N	700 N	1100 N	1600 N
91 ... 205	1200 N	1500 N	2500 N	3600 N
206 ... 300	1800 N	2200 N	3700 N	5400 N

* in 5 mm steps

Guide rail fastenings (principle)

Fastening bracket 70 mm for types B and C

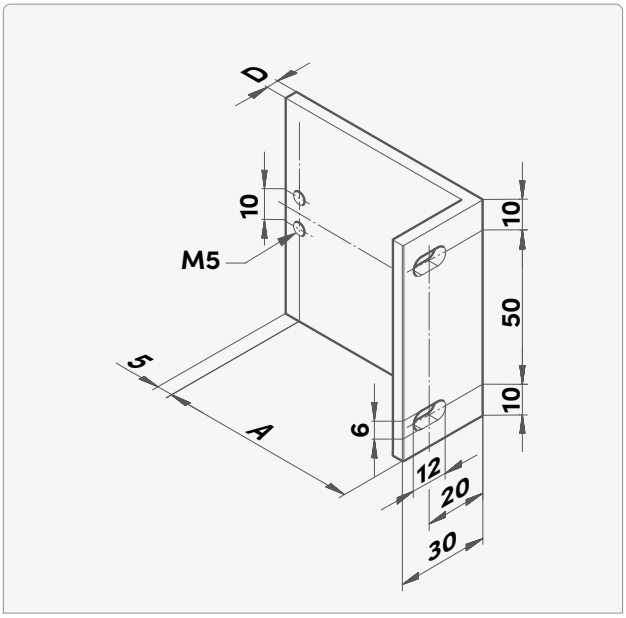

A*	D
20 ... 115	4
120 ... 215	5

Transverse force at least 1000 N and holding force at least 5300 N per fastening point.

If the **projection is ≥120**, all products are fastened with a **70 mm bracket**.

Guide rail fastenings (principle)

Bd Installation with continuous fastening bracket

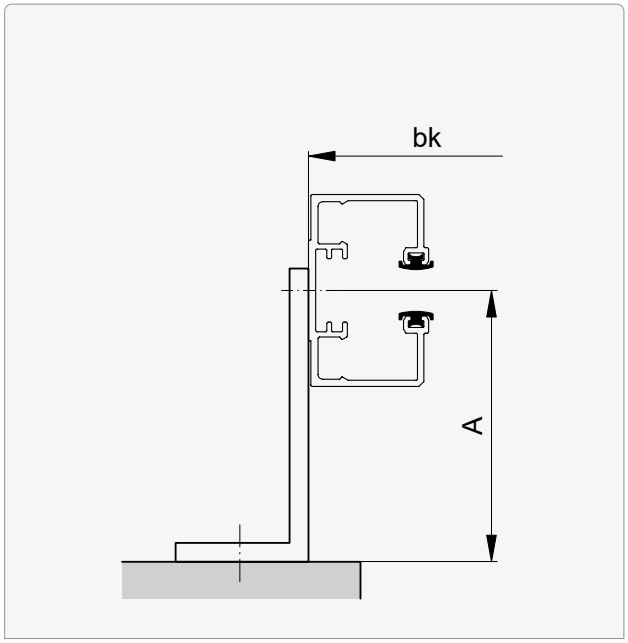

Bracket outwards

Cd Installation with continuous fastening bracket

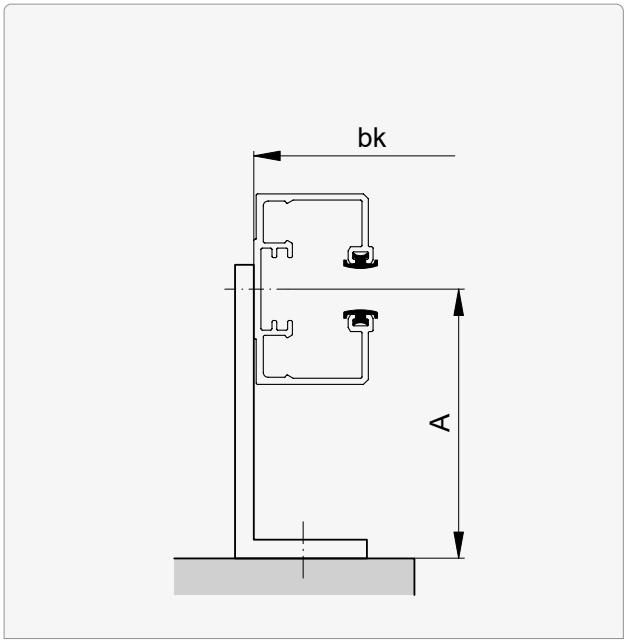

Bracket inwards

Continuous fastening bracket for types Bd and Cd

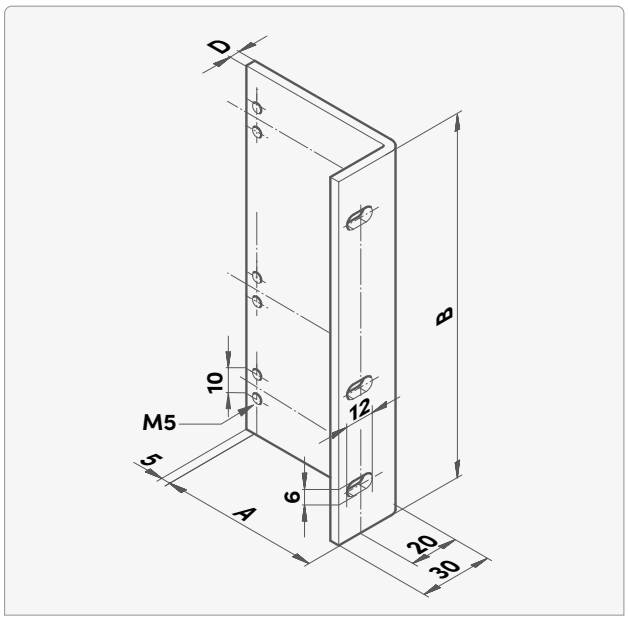

A*	D
20 ... 300	always 4

Transverse force at least 300 N and holding force:

A*	bk < 1.5 m	bk < 2.5 m	bk < 3.5 m	bk < 4.5 m
0 ... 45	300 N	350 N	550 N	800 N
46 ... 90	500 N	700 N	1100 N	1600 N
91 ... 205	1200 N	1500 N	2500 N	3600 N
206 ... 300	1800 N	2200 N	3700 N	5400 N

* in 5 mm steps

Guide rail fastenings (principle)

E | F Installation with fastening lug

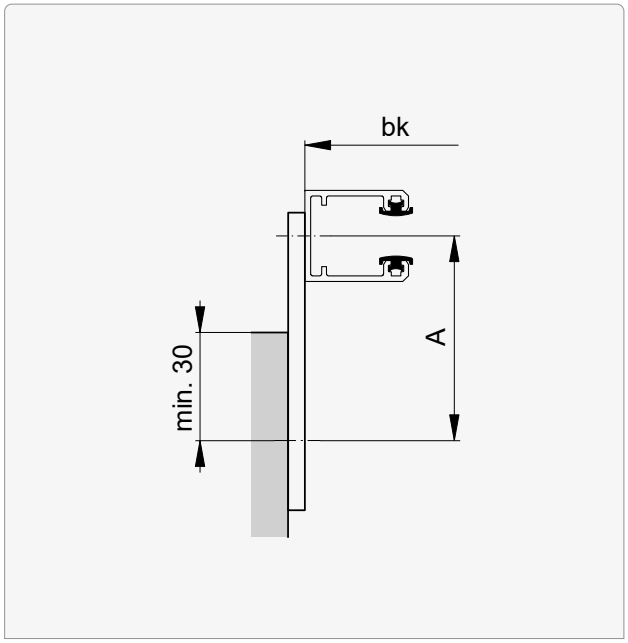

inwards / outwards

Kv Installation with adjustable console

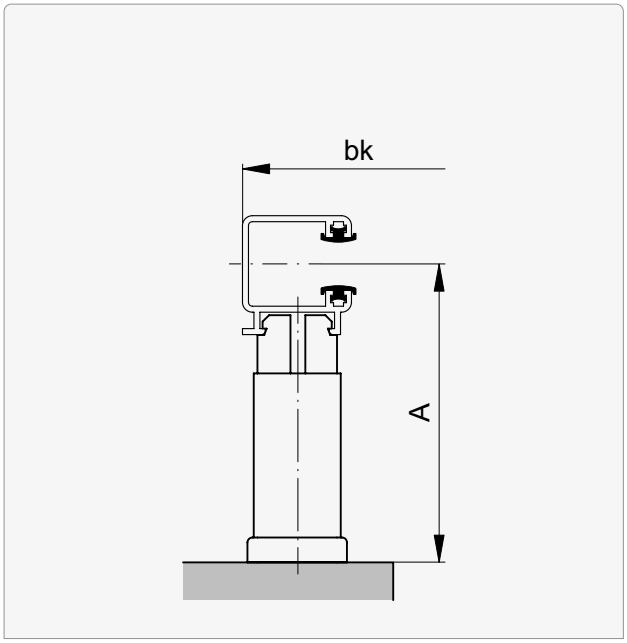

Only with guide type C|T|R

Fastening lug for type E | F

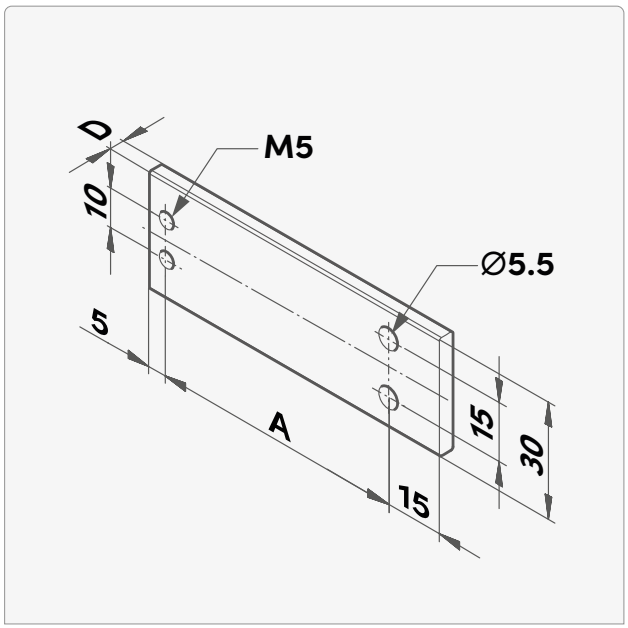

A*	D
50 ... 115	4
120 ... 125	5

Transverse force at least 1000 N and holding force at least 1250 N per fastening point.

* in 5 mm steps

Console for type Kv

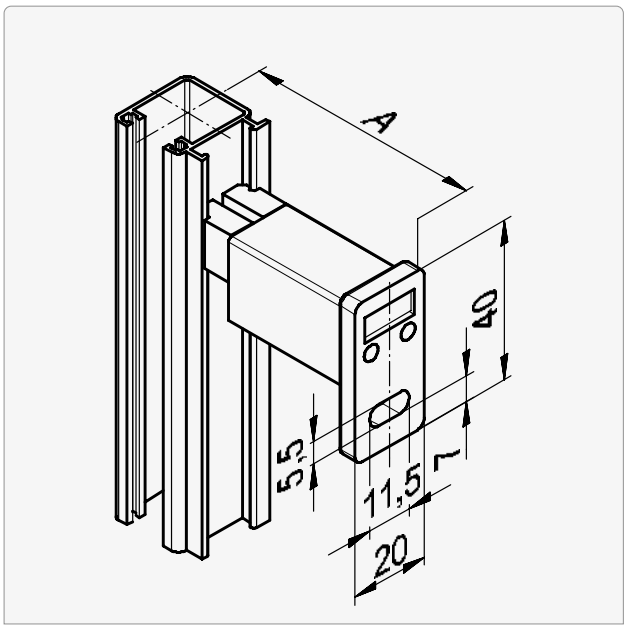

A	A
60 ... 75	121 ... 135
76 ... 90	136 ... 150
91 ... 105	151 ... 165
106 ... 120	166 ... 180
	181 ... 195

Transverse force at least 1000 N and holding force at least 3000 N per fastening point.

Guide rail fastenings (principle)

M Installation with centre bracket

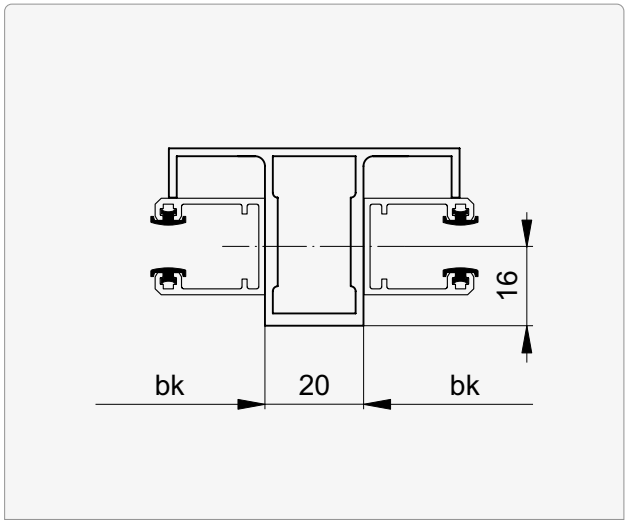

Only with guide type E
Length = Guide length

Principle

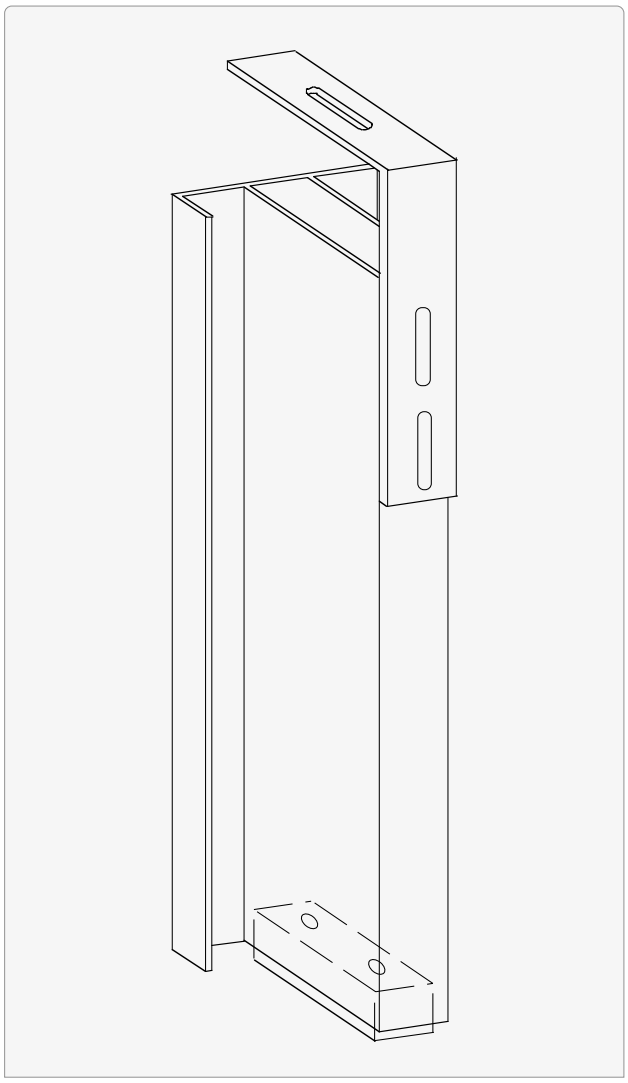

Fastening bracket above centre bracket

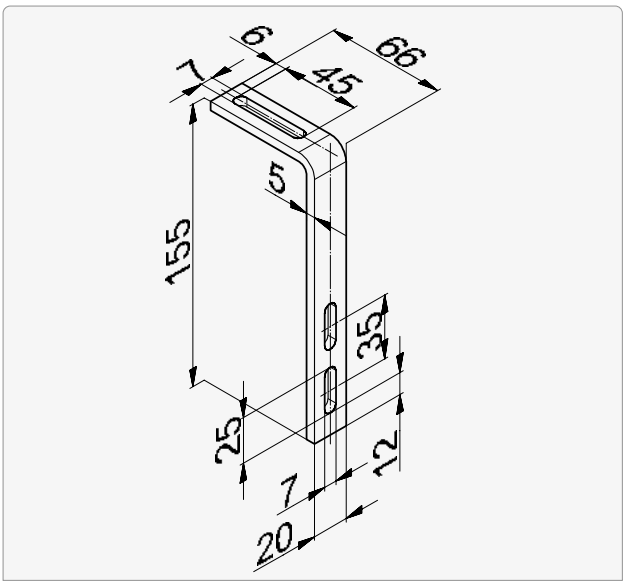

Transverse force at least 1000 N and holding force at least 3000 N per fastening point.

Fastening square below for centre bracket

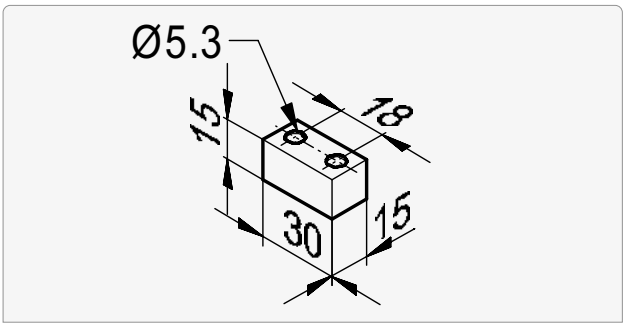

Guide rail fastenings (principle)

T Installation with T-bracket

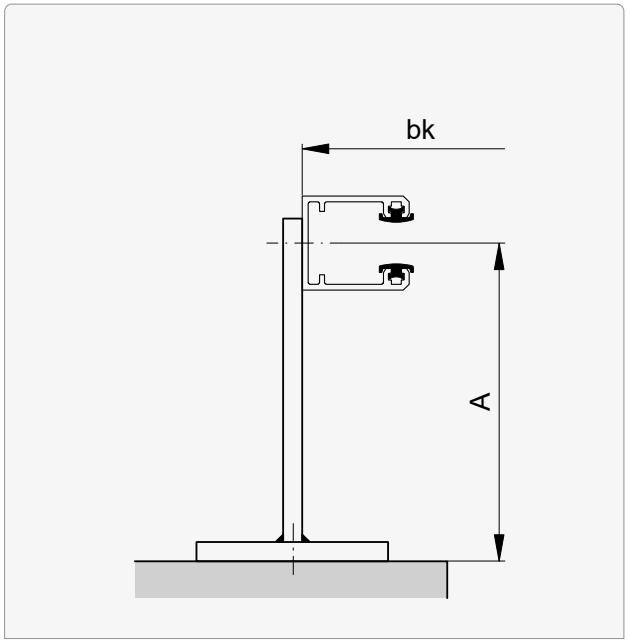

Tv Installation with adjustable T-bracket

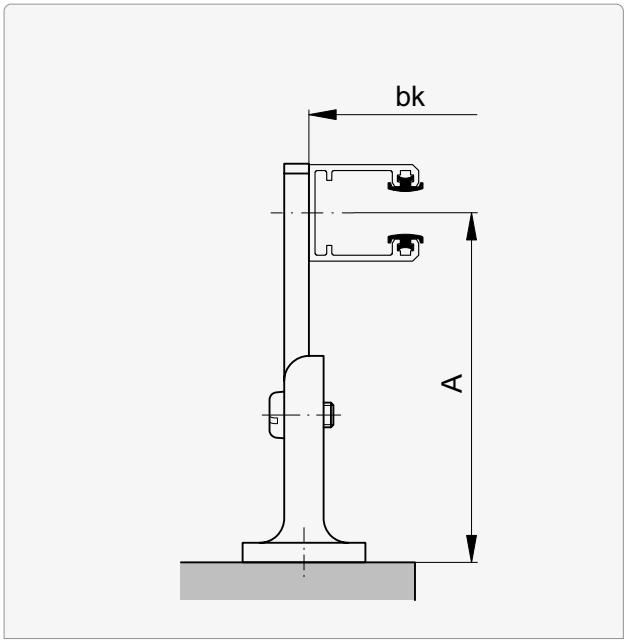

T-bracket for type T

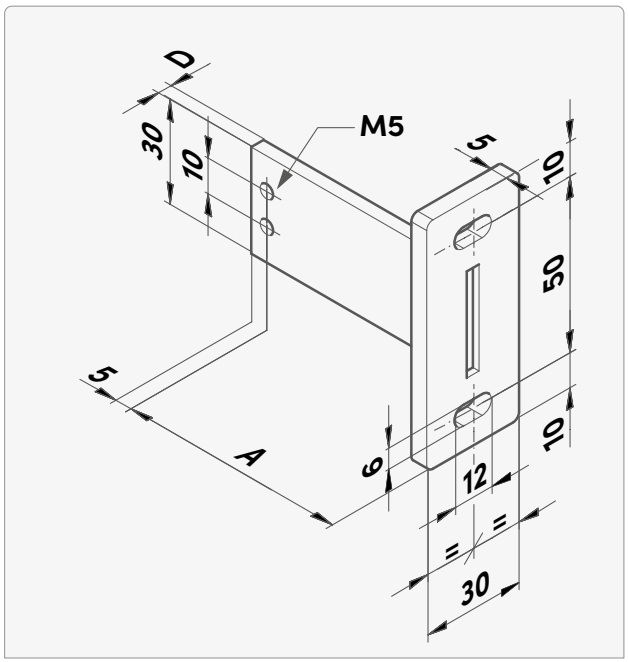

A*	D
20 ... 115	4
120 ... 215	5

Transverse force at least 1000 N and holding force at least 2200 N per fastening point.

* in 5 mm steps

T-bracket adjustable for type Tv

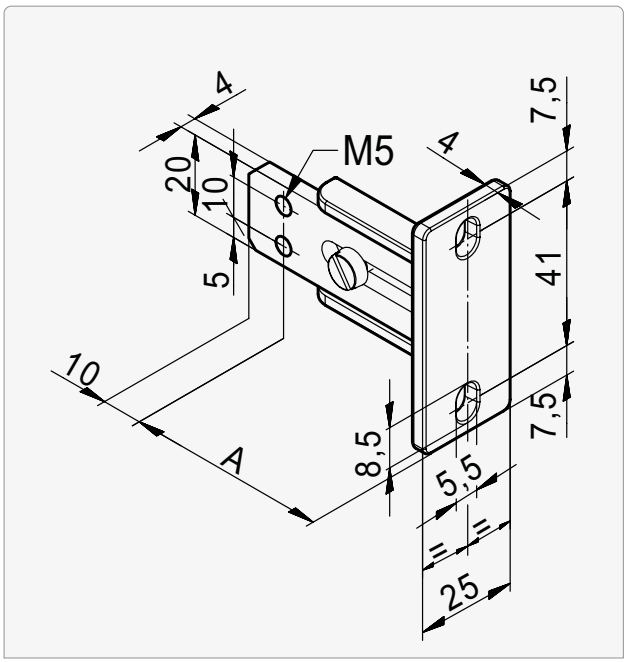

A
50 ... 68
69 ... 87
88 ... 106
107 ... 115

Transverse force at least 1000 N and holding force at least 1400 N per fastening point.

Guide rail fastenings (principle)

V Installation with one bracket

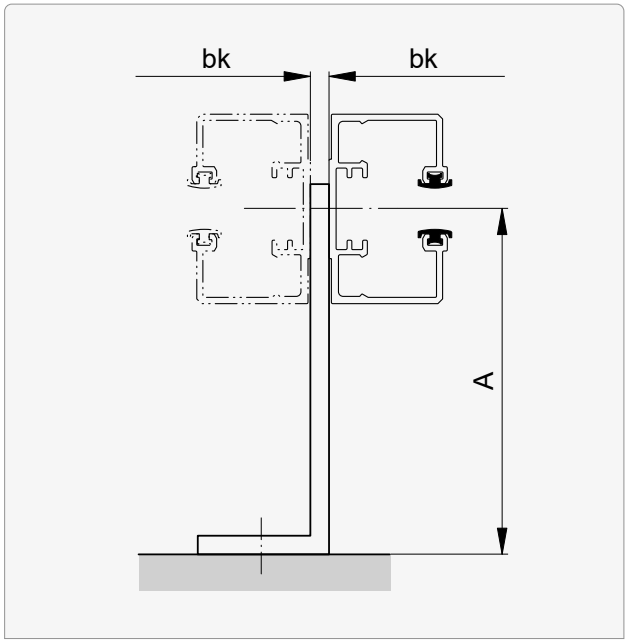

The blind on the right uses the fastening for the blind on the left.

Transverse and holding force per fastening point at least 1000 N.

Wv Installation with adjustable bracket

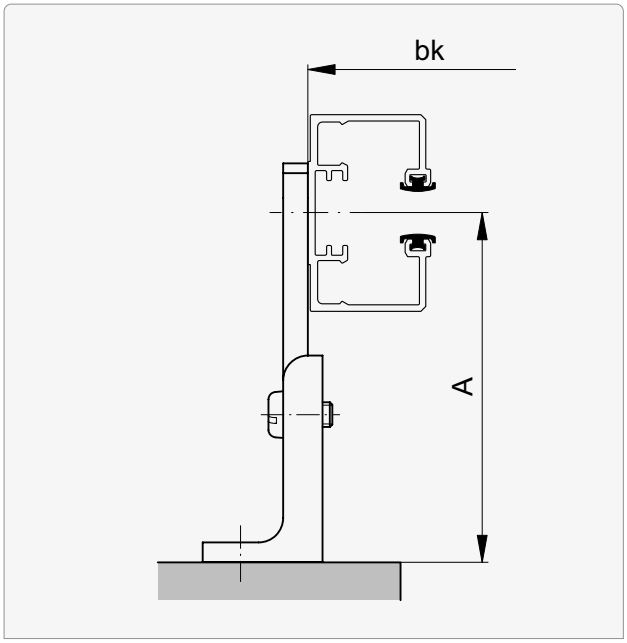

W-bracket adjustable for type Wv

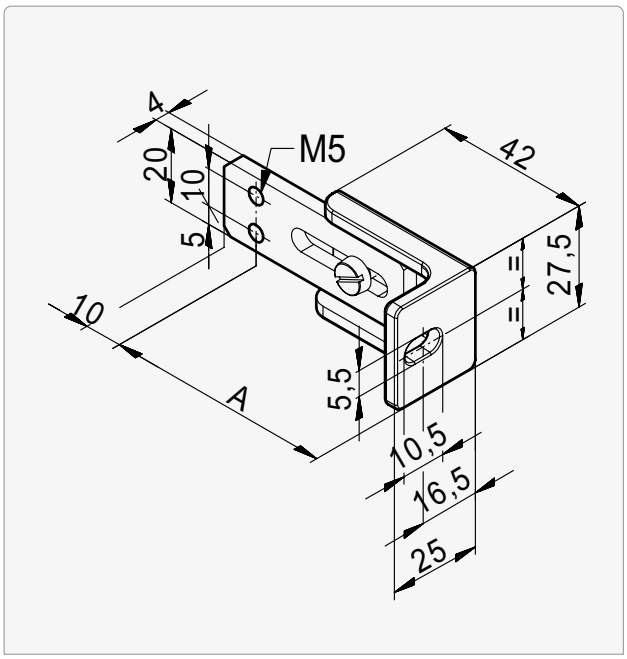

A
50 ... 68
69 ... 87
88 ... 106
107 ... 115

Transverse force at least 1000 N and holding force at least 4000 N per fastening point.

Guide extension and facet

Extension

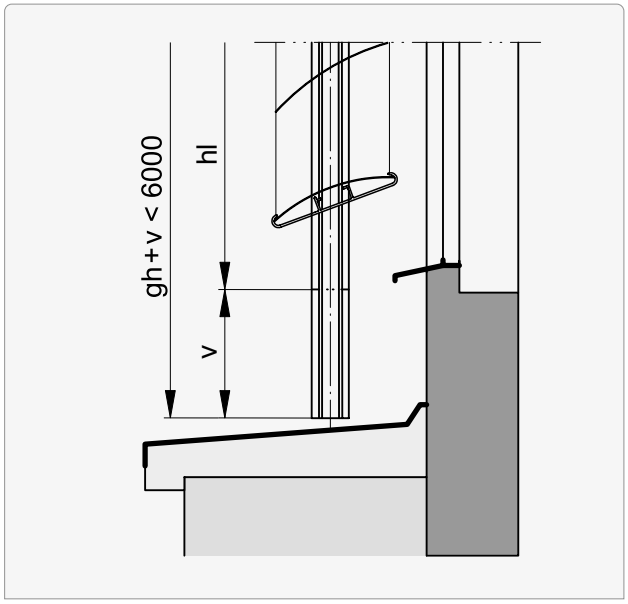

v
–20 ... 3000

Facet

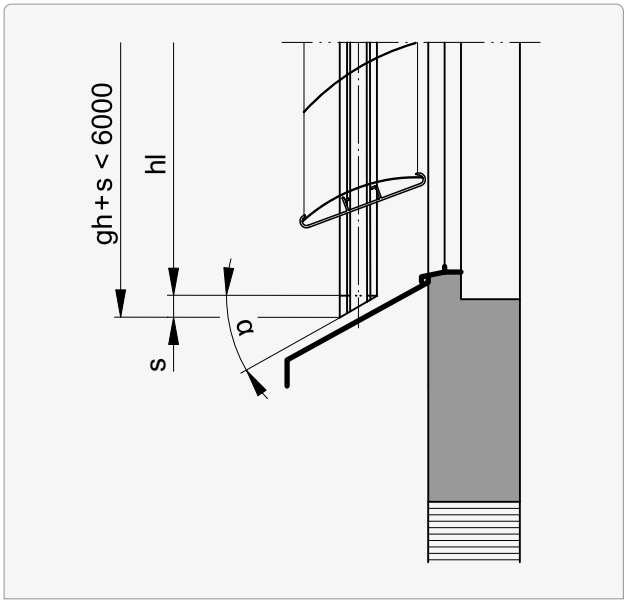

α
5 ... 50°

Extension and facet

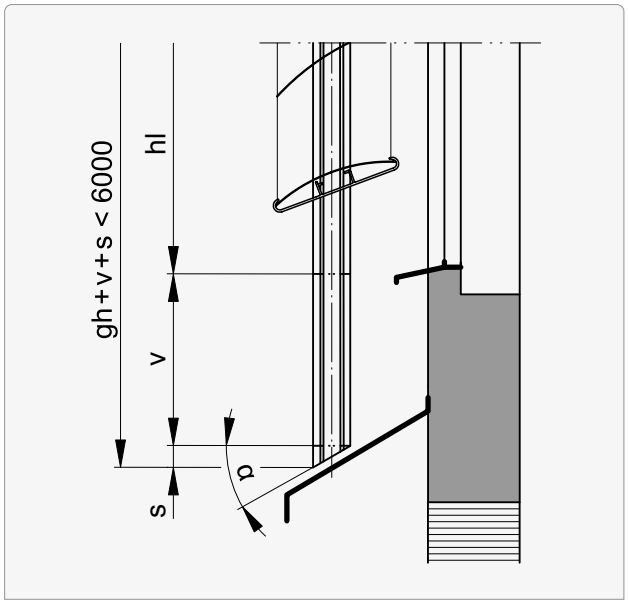

v	α
0 ... 3000	5 ... 50°

Value for **s** **210**

Angling at the guides

Type E | Single guide

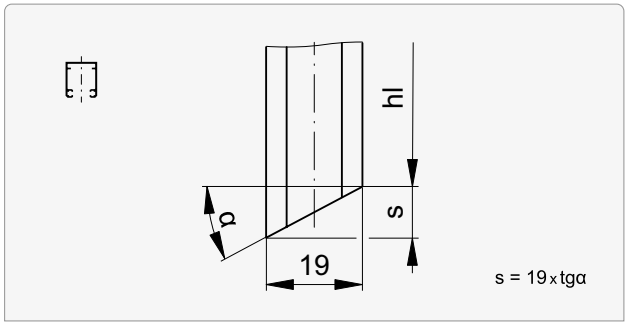

α	s	α	s	α	s	α	s	α	s
5	2	**15**	5	**25**	9	**35**	13	**45**	19
6	2	**16**	5	**26**	9	**36**	14	**46**	20
7	2	**17**	6	**27**	10	**37**	14	**47**	20
8	3	**18**	6	**28**	10	**38**	15	**48**	21
9	3	**19**	7	**29**	11	**39**	15	**49**	22
10	3	**20**	7	**30**	11	**40**	16	**50**	23
11	4	**21**	7	**31**	11	**41**	17		
12	4	**22**	8	**32**	12	**42**	17		
13	4	**23**	8	**33**	12	**43**	18		
14	5	**24**	8	**34**	13	**44**	18		

Type C | Single guide

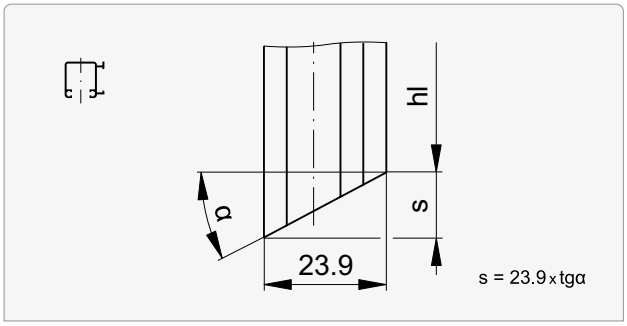

α	s	α	s	α	s	α	s	α	s
5	2	**15**	6	**25**	11	**35**	17	**45**	24
6	3	**16**	7	**26**	12	**36**	17	**46**	25
7	3	**17**	7	**27**	12	**37**	18	**47**	26
8	3	**18**	8	**28**	13	**38**	19	**48**	27
9	4	**19**	8	**29**	13	**39**	19	**49**	27
10	4	**20**	9	**30**	14	**40**	20	**50**	28
11	5	**21**	9	**31**	14	**41**	21		
12	5	**22**	10	**32**	15	**42**	22		
13	6	**23**	10	**33**	16	**43**	22		
14	6	**24**	11	**34**	16	**44**	23		

Type L | Fix guide

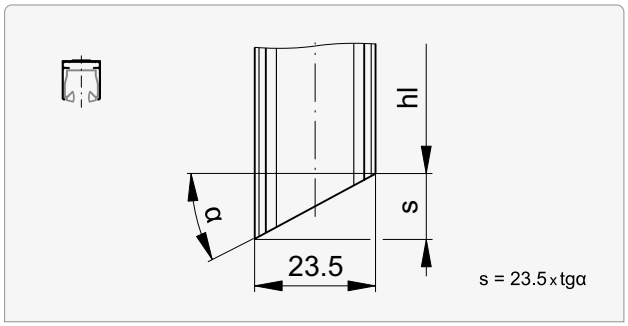

α	s	α	s	α	s	α	s	α	s
5	2	**15**	6	**25**	11	**35**	16	**45**	24
6	2	**16**	7	**26**	11	**36**	17	**46**	24
7	3	**17**	7	**27**	12	**37**	18	**47**	25
8	3	**18**	8	**28**	12	**38**	18	**48**	26
9	4	**19**	8	**29**	13	**39**	19	**49**	27
10	4	**20**	9	**30**	14	**40**	20	**50**	28
11	5	**21**	9	**31**	14	**41**	20		
12	5	**22**	9	**32**	15	**42**	21		
13	5	**23**	10	**33**	15	**43**	22		
14	6	**24**	10	**34**	16	**44**	23		

Type F | Fix guide

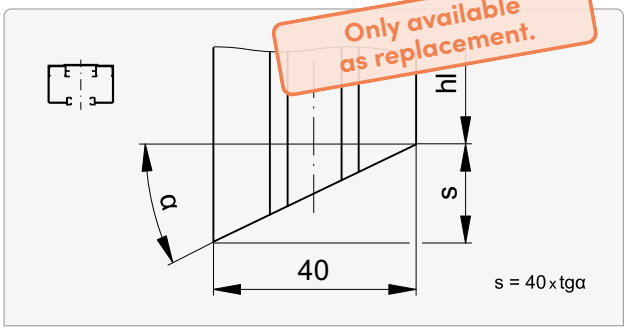

α	s	α	s	α	s	α	s	α	s
5	3	**15**	11	**25**	19	**35**	28	**45**	40
6	4	**16**	11	**26**	20	**36**	29	**46**	41
7	5	**17**	12	**27**	20	**37**	30	**47**	43
8	6	**18**	13	**28**	21	**38**	31	**48**	44
9	6	**19**	14	**29**	22	**39**	32	**49**	46
10	7	**20**	15	**30**	23	**40**	34	**50**	48
11	8	**21**	15	**31**	24	**41**	35		
12	9	**22**	16	**32**	25	**42**	36		
13	9	**23**	17	**33**	26	**43**	37		
14	10	**24**	18	**34**	27	**44**	39		

Angling at the guides

Type T | Double guide

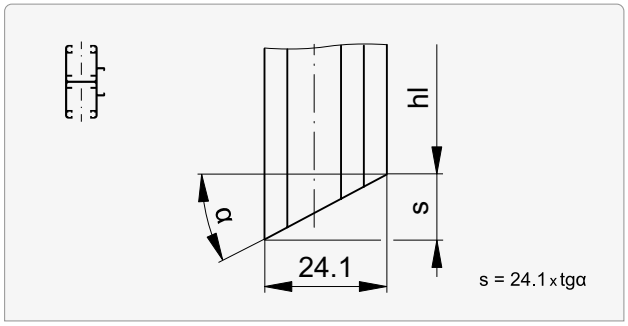

α	s	α	s	α	s	α	s	α	s
5	2	**15**	6	**25**	11	**35**	17	**45**	24
6	3	**16**	7	**26**	12	**36**	18	**46**	25
7	3	**17**	7	**27**	12	**37**	18	**47**	26
8	3	**18**	8	**28**	13	**38**	19	**48**	27
9	4	**19**	8	**29**	13	**39**	20	**49**	28
10	4	**20**	9	**30**	14	**40**	20	**50**	29
11	5	**21**	9	**31**	14	**41**	21		
12	5	**22**	10	**32**	15	**42**	22		
13	6	**23**	10	**33**	16	**43**	22		
14	6	**24**	11	**34**	16	**44**	23		

Type D | Double guide

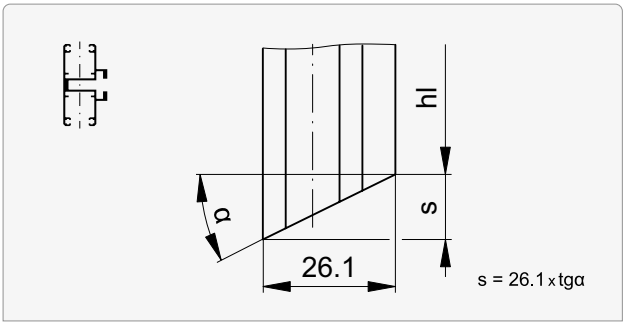

α	s	α	s	α	s	α	s	α	s
5	2	**15**	7	**25**	12	**35**	18	**45**	26
6	3	**16**	7	**26**	13	**36**	19	**46**	27
7	3	**17**	8	**27**	13	**37**	20	**47**	28
8	4	**18**	8	**28**	14	**38**	20	**48**	29
9	4	**19**	9	**29**	14	**39**	21	**49**	30
10	5	**20**	9	**30**	15	**40**	22	**50**	31
11	5	**21**	10	**31**	16	**41**	23		
12	6	**22**	11	**32**	16	**42**	24		
13	6	**23**	11	**33**	17	**43**	24		
14	7	**24**	12	**34**	18	**44**	25		

Type R | Curved double guide

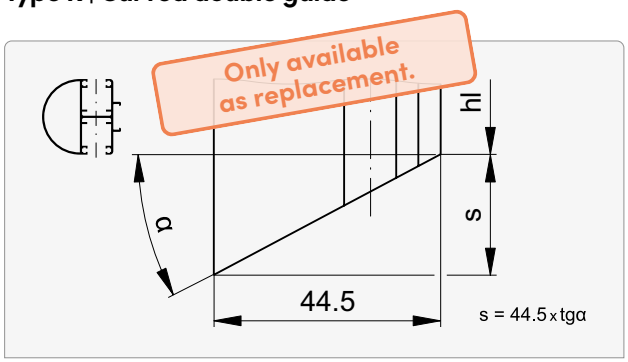

α	s	α	s	α	s	α	s	α	s
5	4	**15**	12	**25**	21	**35**	31	**45**	45
6	5	**16**	13	**26**	22	**36**	32	**46**	46
7	5	**17**	14	**27**	23	**37**	34	**47**	48
8	6	**18**	14	**28**	24	**38**	35	**48**	50
9	7	**19**	15	**29**	25	**39**	36	**49**	51
10	8	**20**	16	**30**	26	**40**	37	**50**	53
11	9	**21**	17	**31**	27	**41**	39		
12	9	**22**	18	**32**	28	**42**	40		
13	10	**23**	19	**33**	29	**43**	42		
14	11	**24**	20	**34**	30	**44**	43		

Guide rail cut-outs in windowsill area

Guide type						
C	D	E	F	L	R	T
–	–	●	●	●	–	–

Rear cut-out | with extension

Extension | v ≥ A

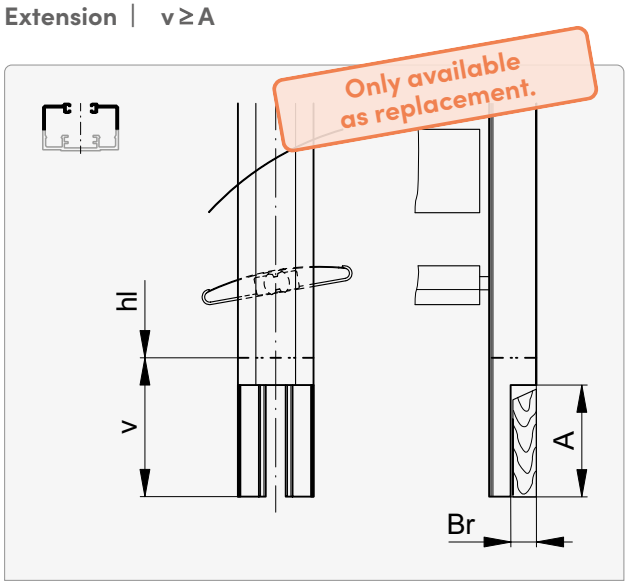

A (≤v)	Br		
Guide type	E	F	L*
0 ... 25	2 ... 3	2 ... 4	2 ... 4
	5 ... 12	9 ... 12	6

*** FL ≥ 630**

Inner cut-out | without / with extension

Extension | v ≥ A

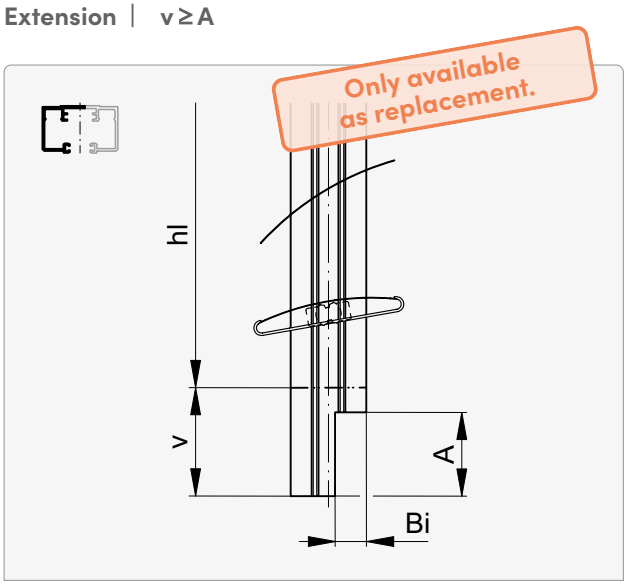

A (≤v)	Bi		
Guide type	E	F	L*
0 ... 25	6 ... 12	3 ... 10	8 ... 12

*** FL ≥ 630**

v Guide rail extension: 0 ... 3000

Installation window

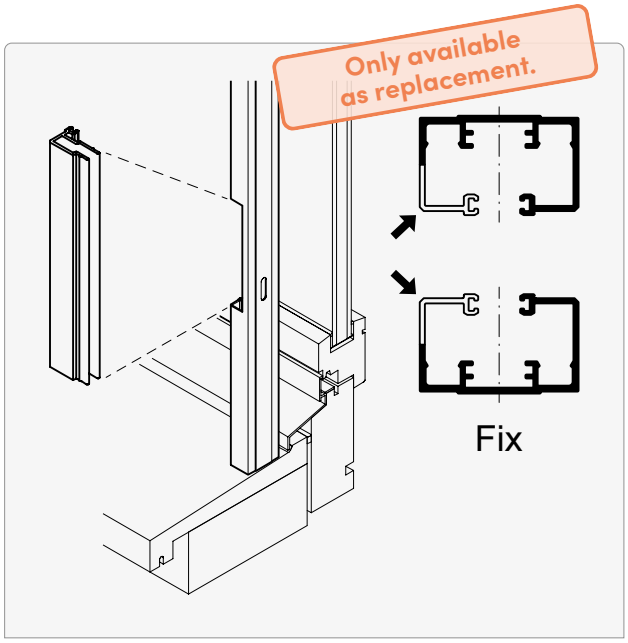

Without extension

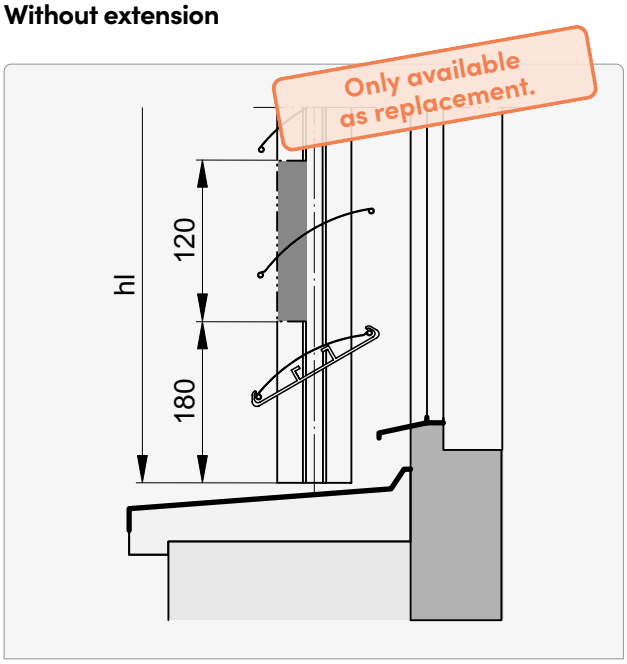

With extension

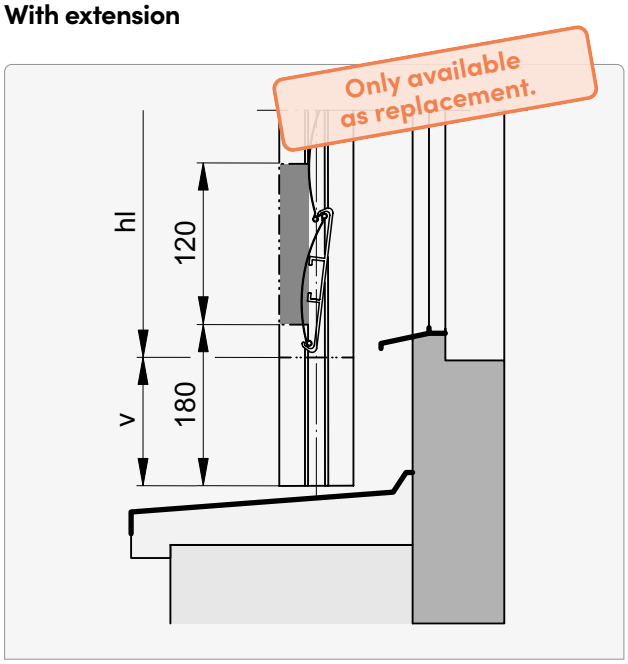

With extension and facet

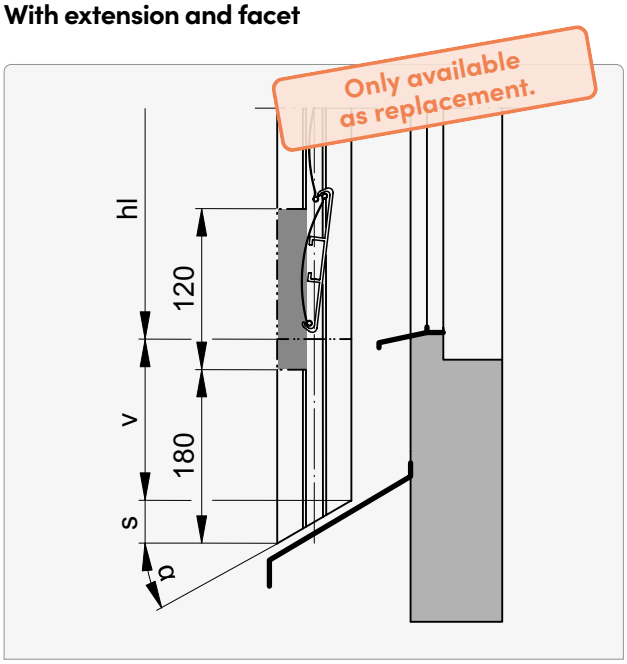

s Faceting (guide rail width x tgα)

v Guide rail extension: max. 3000

Fastening points

Transverse and holding force per fastening point at least 700 N.

With guide rail extension

Z	AS min.
≤ 1500	2
1501 ... 2700	3
2701 ... 3900	4
3901 ... 5100	5
> 5100	6

Regular

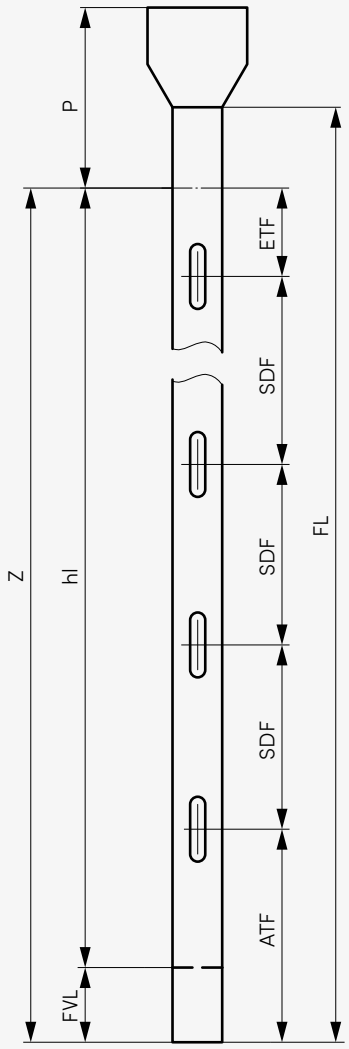

Irregular

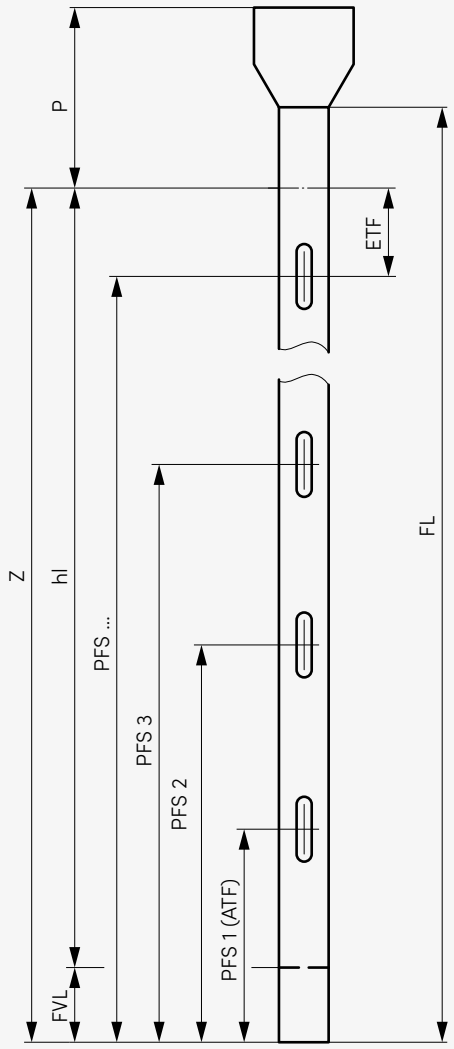

AS Number of slits
ATF Initial spacing guide rail (standard 200)
ETF Endspacing guide rail (standard 100)
FL Guide length
FVL Guide rail extension
PFS Slot position
SDF Slot distance guide rail: 100 ... 1200

Guide extension and facet 209
Guide rail fastenings 201
Installation window 213

Fastening points

Transverse and holding force per fastening point at least 700 N.

With guide rail extension and facet

Z	AS min.
≤ 1500	2
1501 ... 2700	3
2701 ... 3900	4
3901 ... 5100	5
> 5100	6

Regular

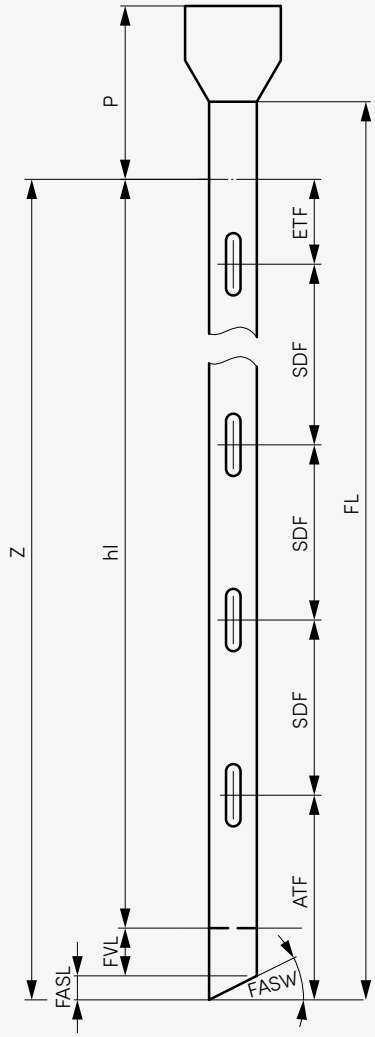

Irregular

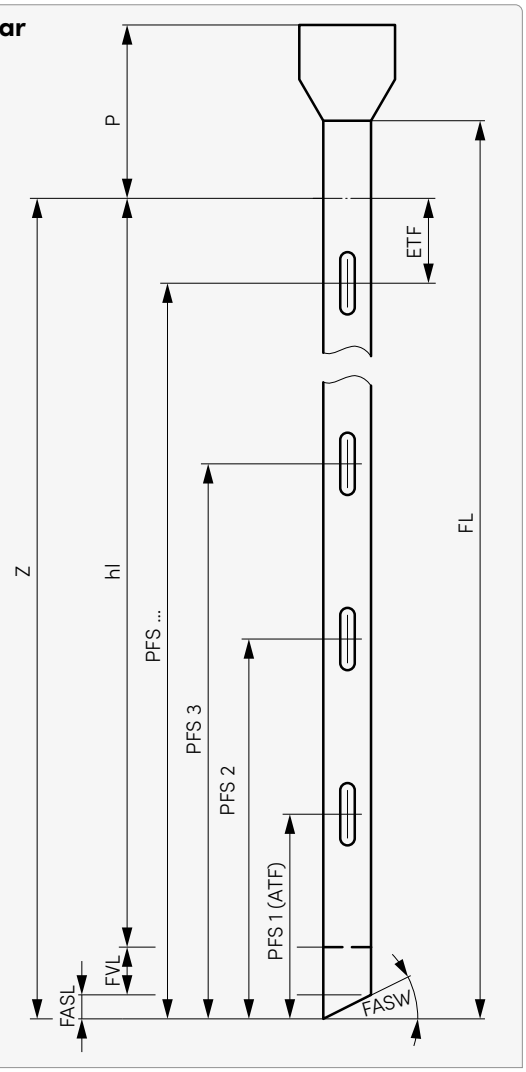

AS Number of slits
ATF Initial spacing guide rail (standard 200)
ETF Endspacing guide rail (standard 100)
FASL Guide rail facet length
FASW Guide rail facet angle

FL Guide length
FVL Guide rail extension
PFS Slot position
SDF Slot distance guide rail: 100 ... 1200

Guide extension and facet 209
Guide rail fastenings 201
Installation window 213

Guide rail end for suspended guide rails

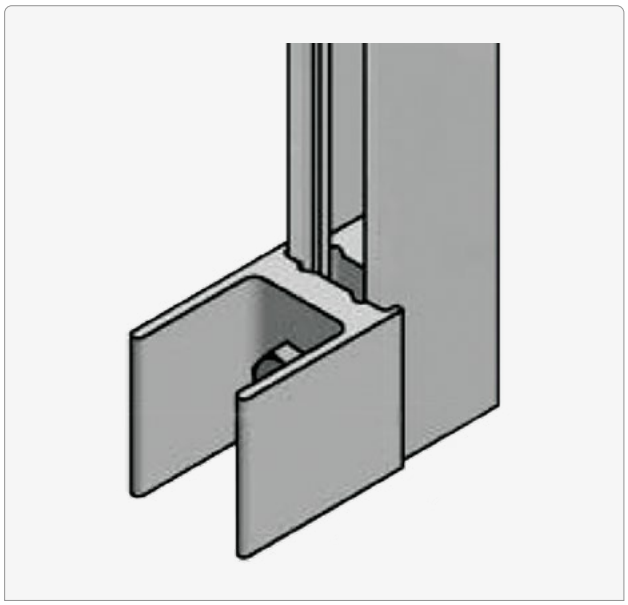

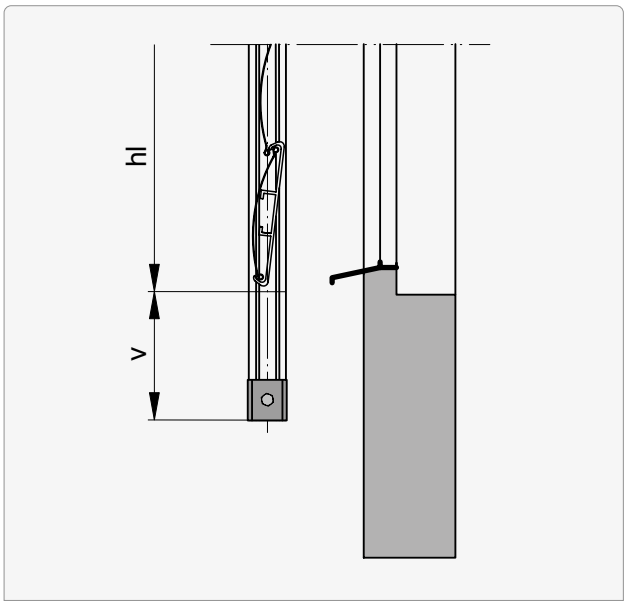

Guide type						
C	D	E	F	L	R	T
●	●	●	●	●	●	●

L*	v
70	≥30

* Guide fastening with local brackets.

Guide extension for window sill installation

For additional intermediate cables with "tensioning bracket down", **the guide rails must be extended 60 mm for window ledge mounting.**

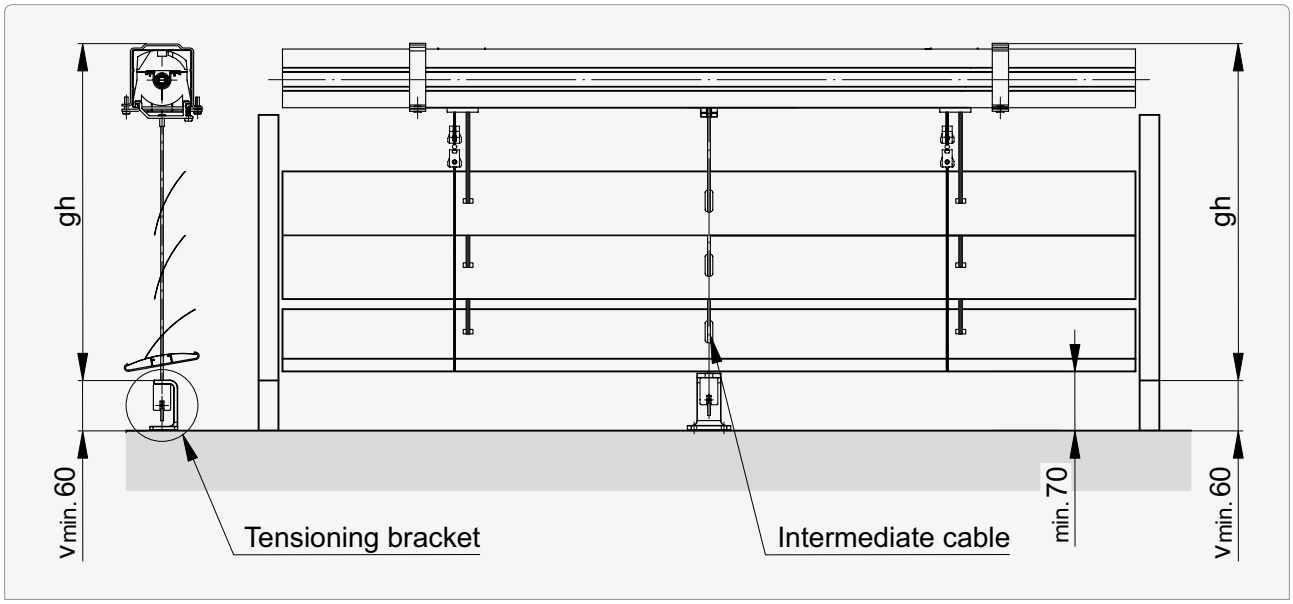

Fastening points

Box

Transverse and holding force per fastening point at least 700 N.

Without guide rail extension

hl	AS min.
≤ 1500	2
1501 ... 2700	3
2701 ... 3900	4
3901 ... 5100	5
> 5100	6

Regular

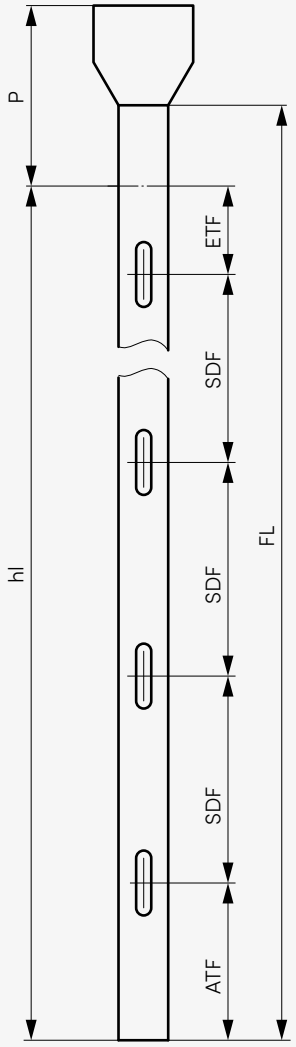

Irregular

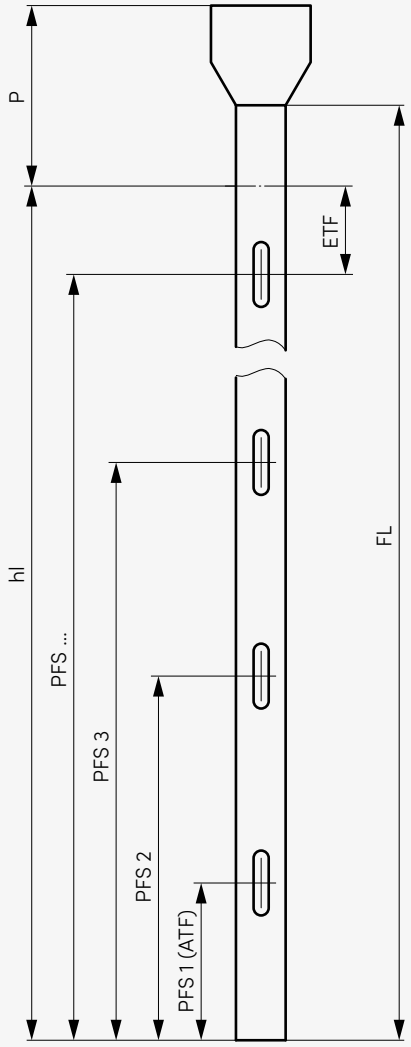

AS Number of slits
ATF Initial spacing guide rail (standard 200)
ETF Endspacing guide rail (standard 100)

FL Guide length
PFS Slot position
SDF Slot distance guide rail: 100 ... 1200

Guide rail fastenings 201
Installation window 213

Fastening points

Transverse and holding force per fastening point at least 700 N.

Without guide rail extension, with facet

hl	AS min.
≤1500	2
1501 ... 2700	3
2701 ... 3900	4
3901 ... 5100	5
>5100	6

Regular

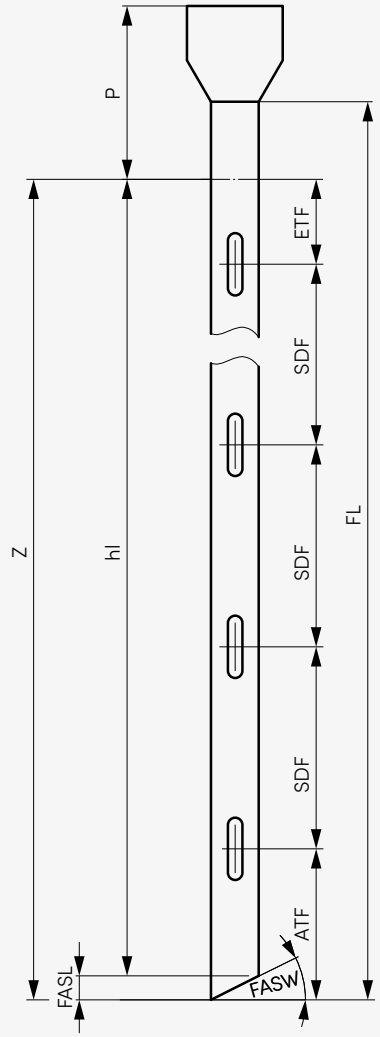

Irregular

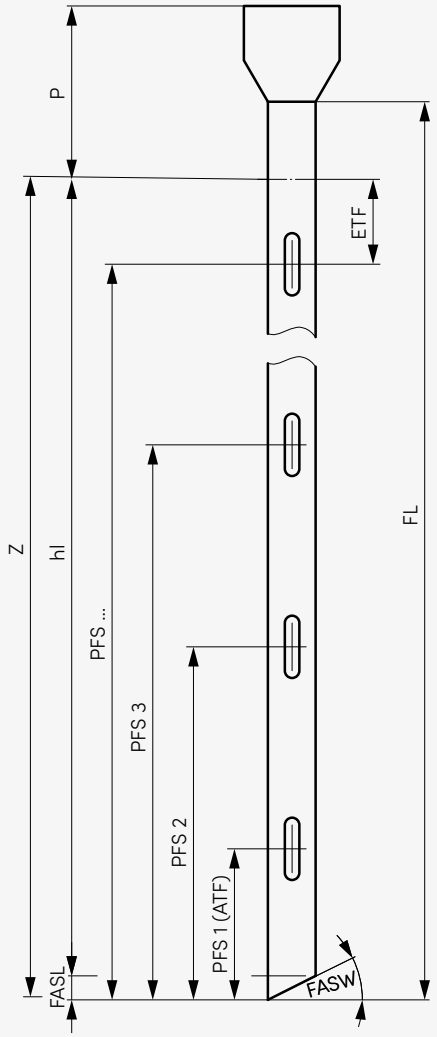

AS Number of slits
ATF Initial spacing guide rail (standard 200)
ETF Endspacing guide rail (standard 100)
FASL Guide rail facet length
FASW Guide rail facet angle
FL Guide length
PFS Slot position
SDF Slot distance guide rail: 100 ... 1200

Guide extension and facet 209
Guide rail fastenings 201
Installation window 213

Connected systems

System width

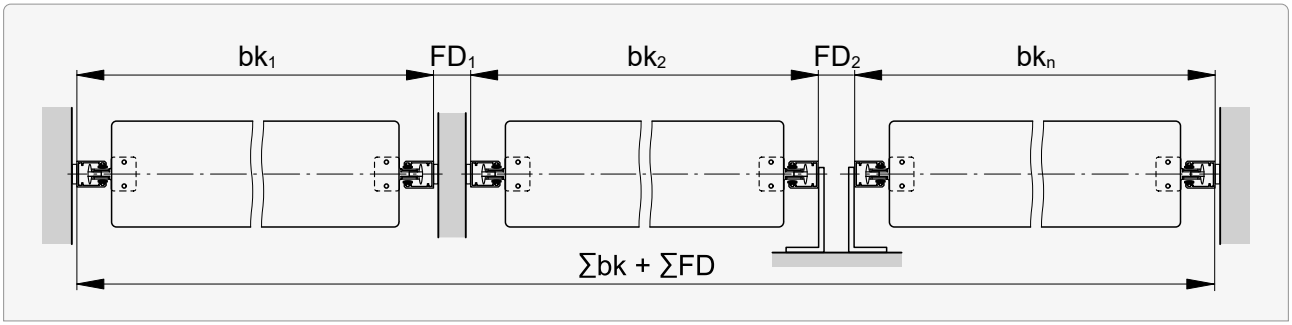

Distance between guides FD

Single guide | Fix guide

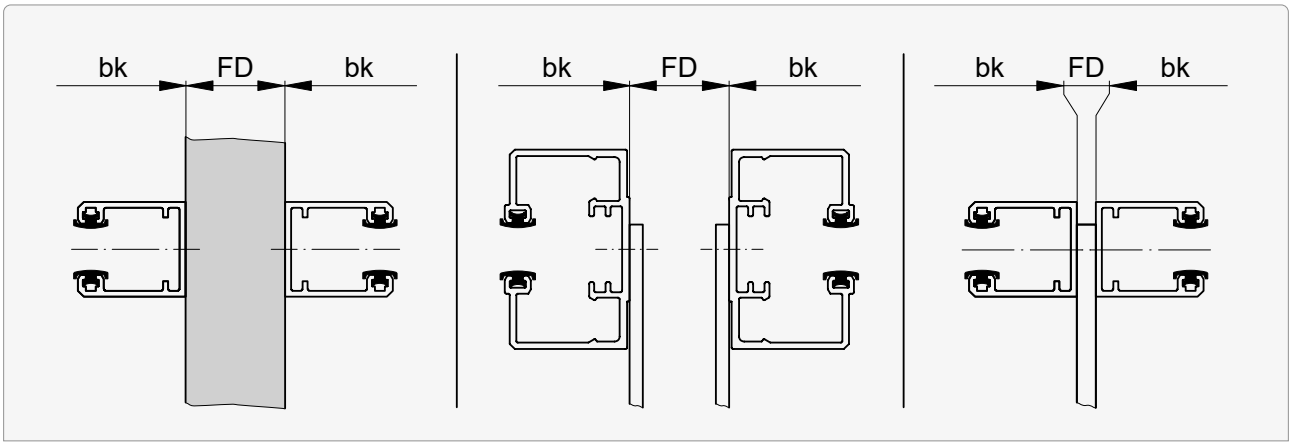

FD min.	FD max.
5	1000

Double guide

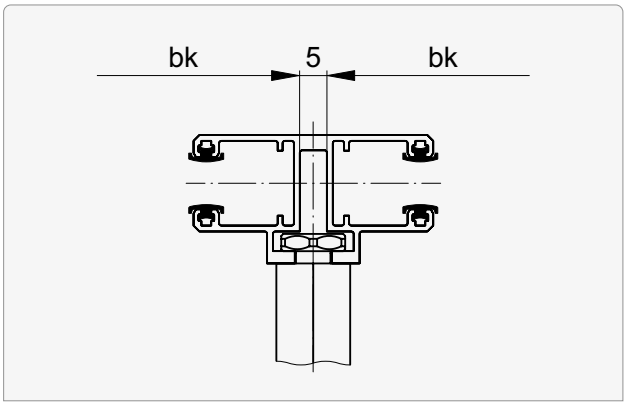

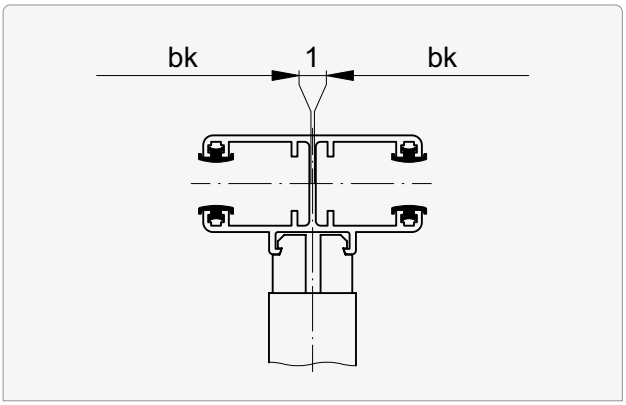

Opening for connected blinds.....220

Connected systems

Drive position

Gearbox

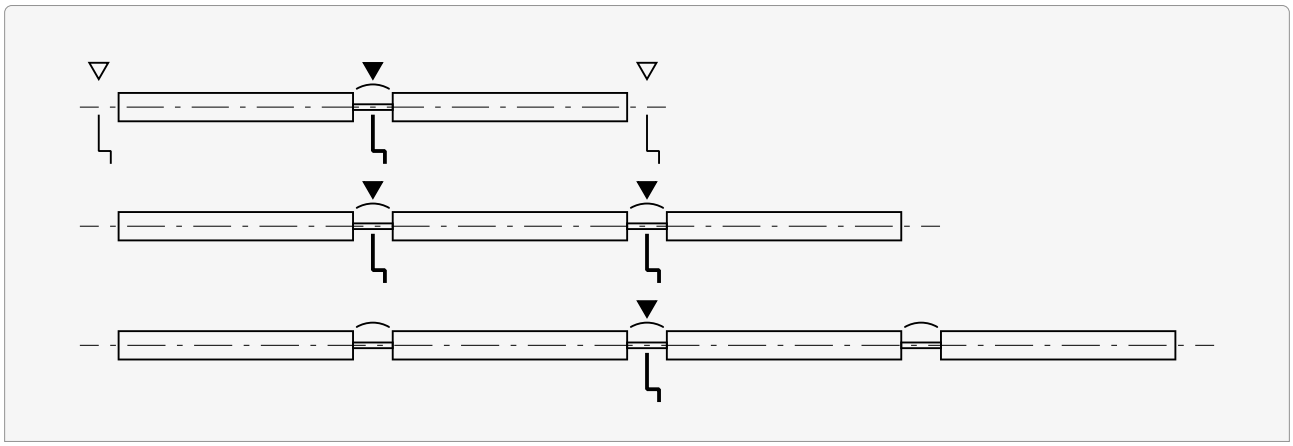

Motor

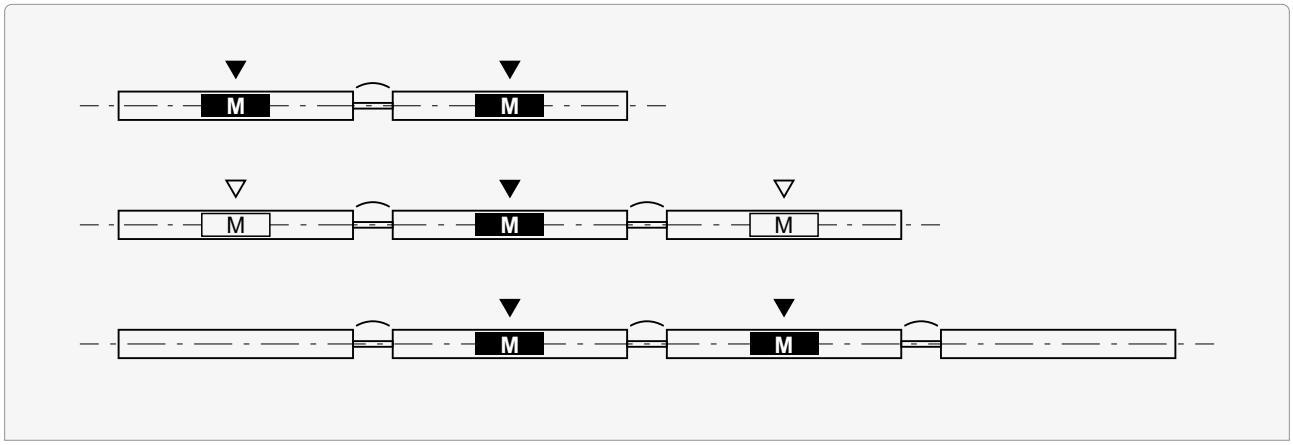

▼ Standard drive position
▽ Possible drive position

Opening for connected blinds

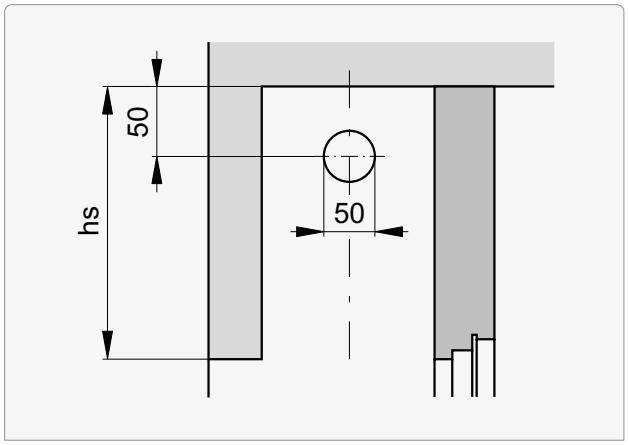

Cable guide Details

Soffit-/facade mounting

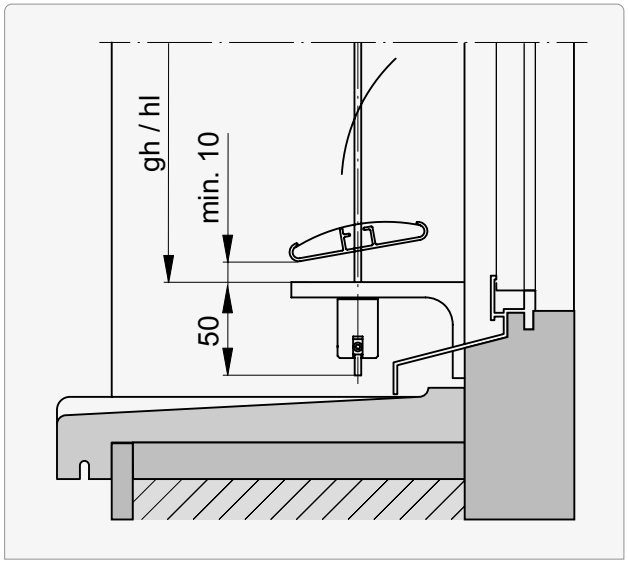

Cable fastenings **228**

Window ledge mounting

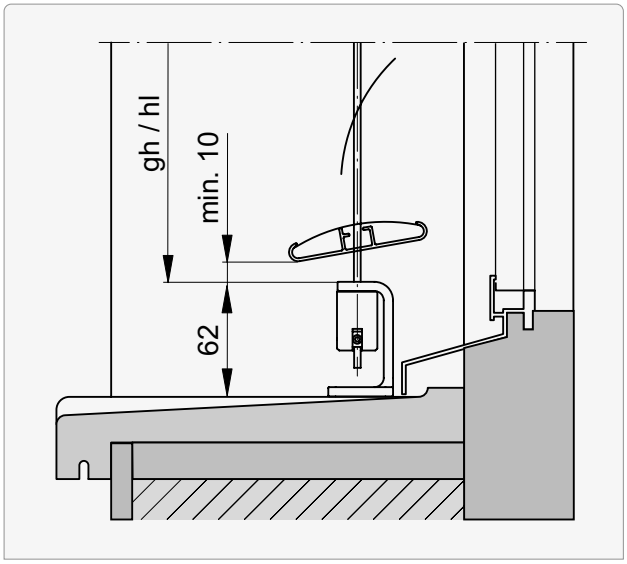

Distance between guides **FD** **230**

Horizontal section

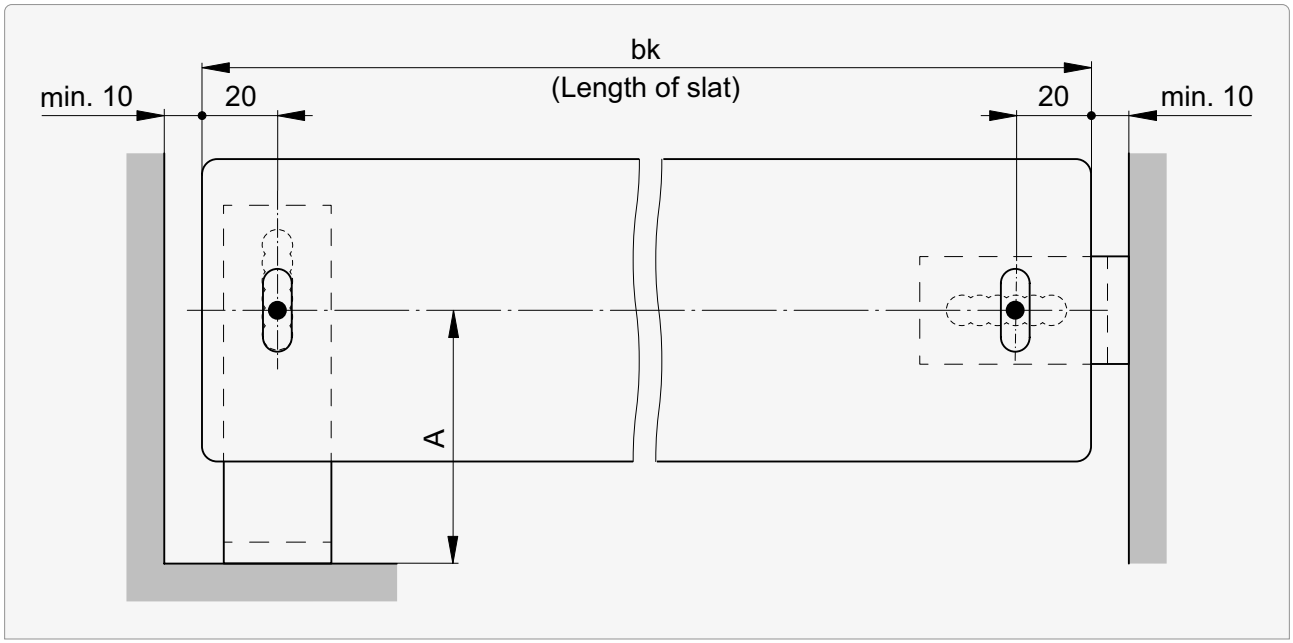

Value for **A** **181**

Sections | Details

Horizontal section: Box

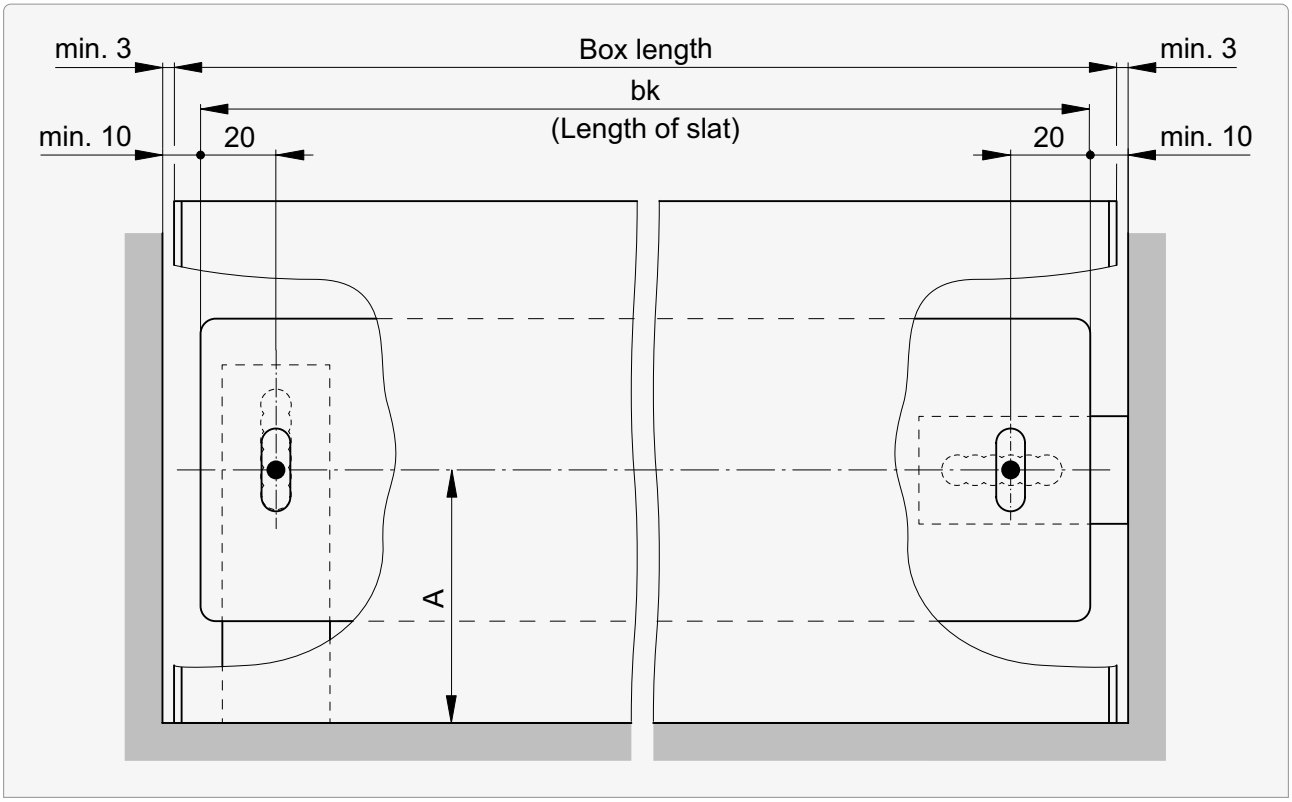

Value for **A**.....**181**

Horizontal section: Box extension

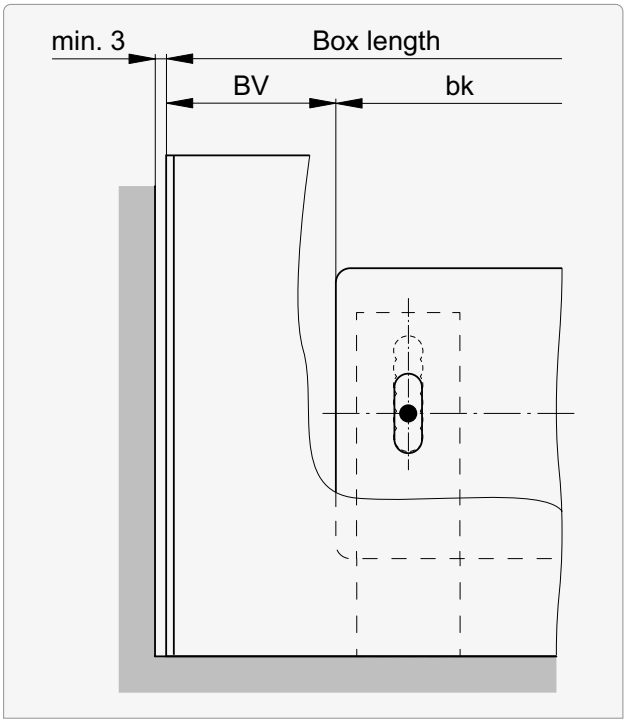

Sections for crank drive (MBMA)

outside bk

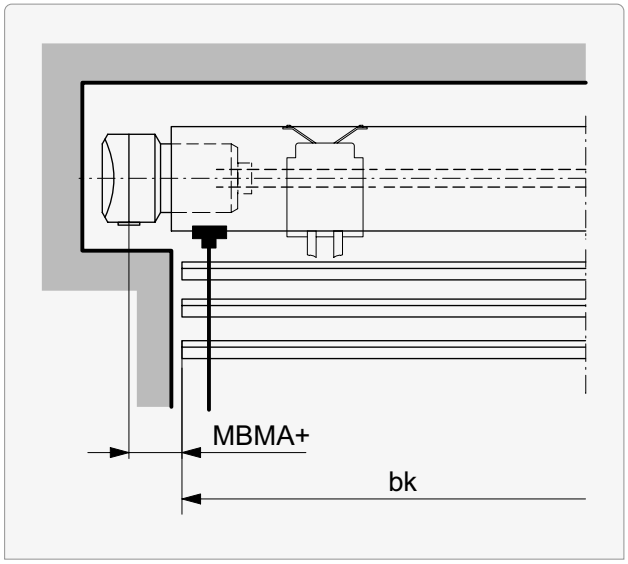

within bk

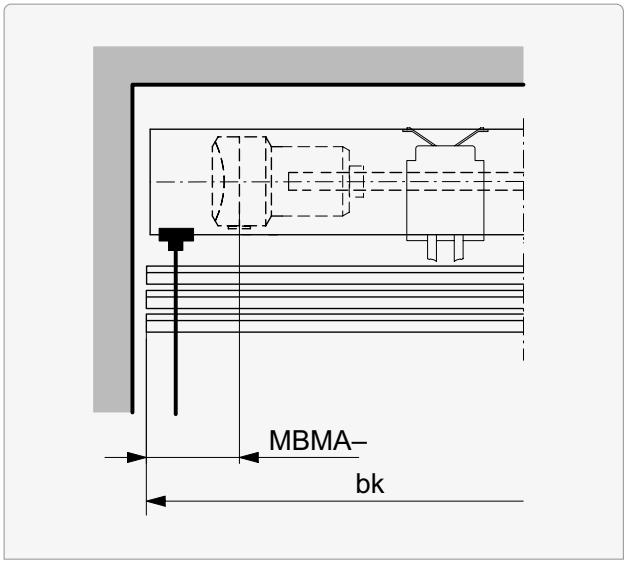

MBMA+[1]	MBMA–
20 … 999	80 … (bk / 2)

[1] For 20 … 44, provide enough niche depth for the housing extension.

Additional cables

Additional cables must be fitted for a bk > 3000 and in locations which are exposed to high wind.
The dimensions **P1** and **P2** are **measured from the left from bk** and **must be noted on the dimensions sheet.**
P2 does not apply for the first additional cable.

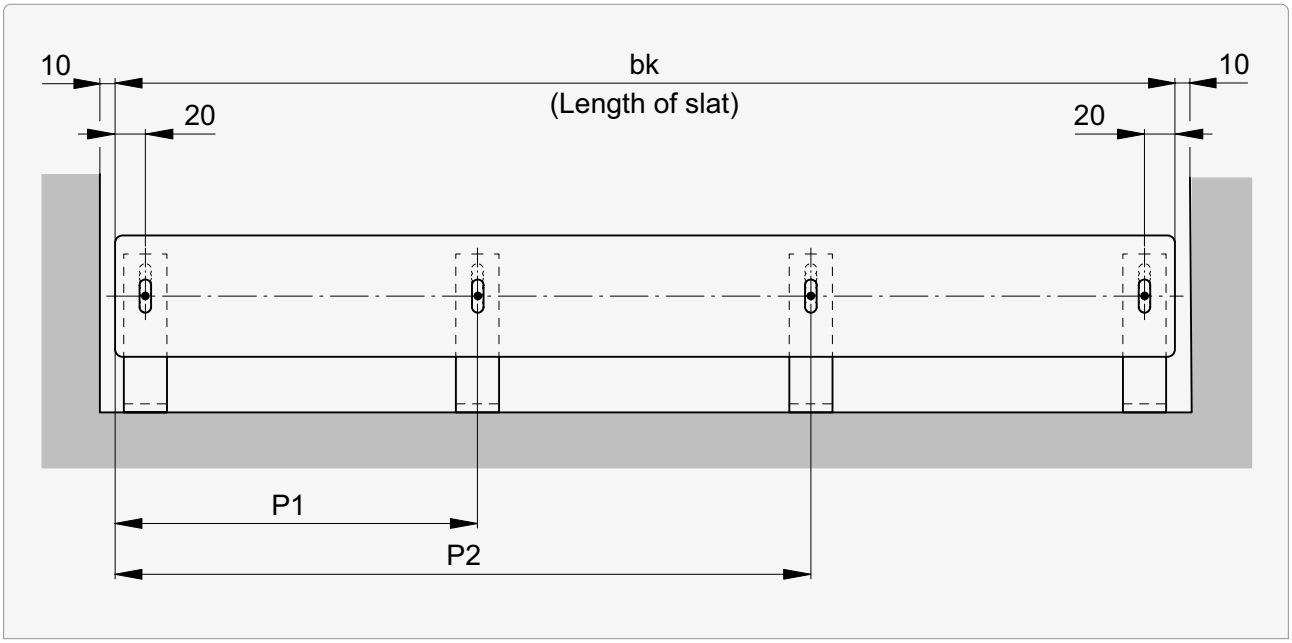

P1 Position of first cable or cable on the left
P2 Position of cable on the right

Number of additional cables

If no information is provided for P1 or P2, they are positioned according to the following table.

Width max. (bk)	**Number of additional cables**	**P1**	**P2**
≤3000	0	–	–
3001 ... 4400	1	(bk / 2)	–
>4400	2	(bk / 3)	2 (bk / 3)

Cable fastenings.....**228**

Vertical connections | Standard motor position

Number of bearings

Aluflex® 60

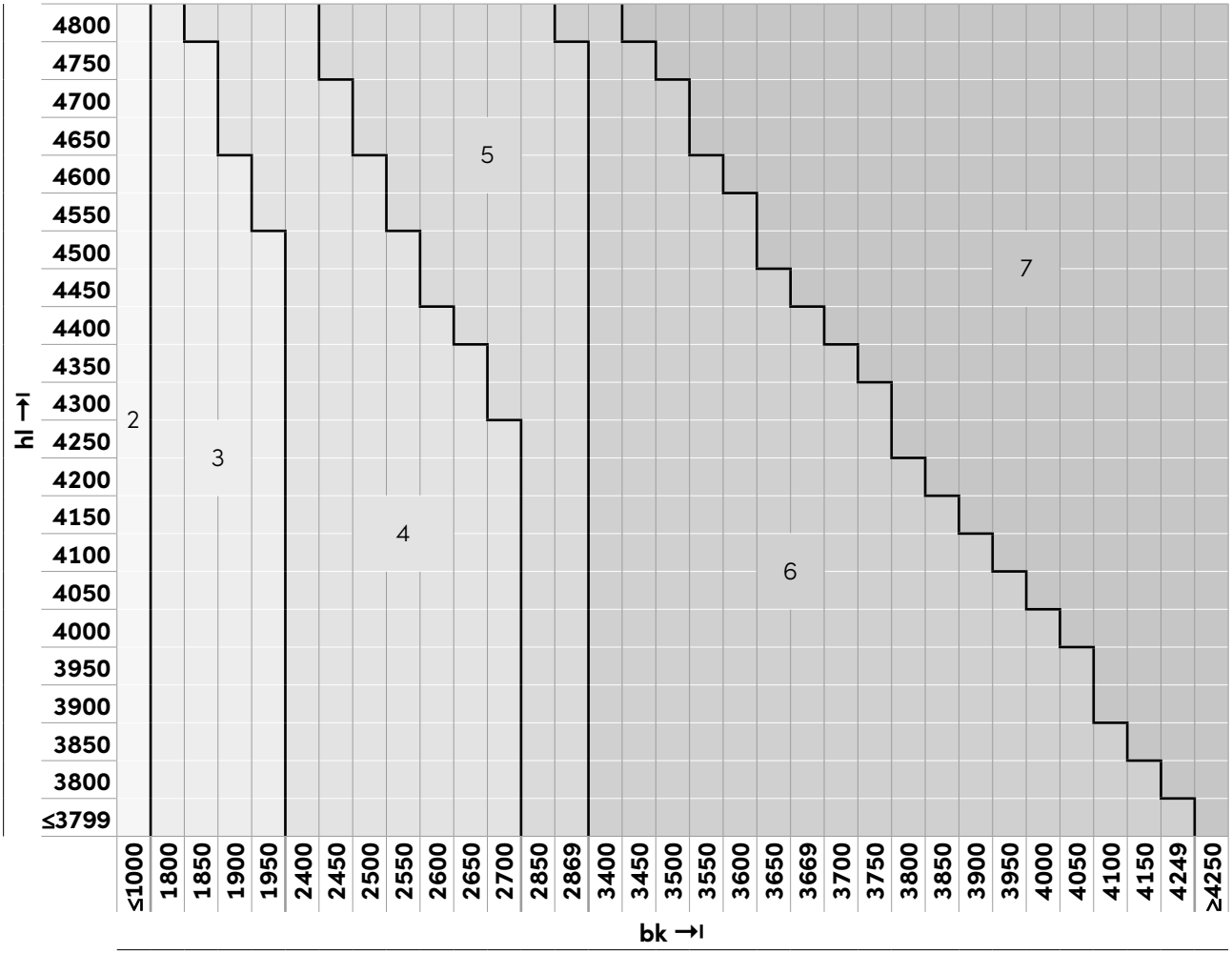

Standard motor position 198

Vertical connections | Standard motor position

Number of bearings

Aluflex® 80

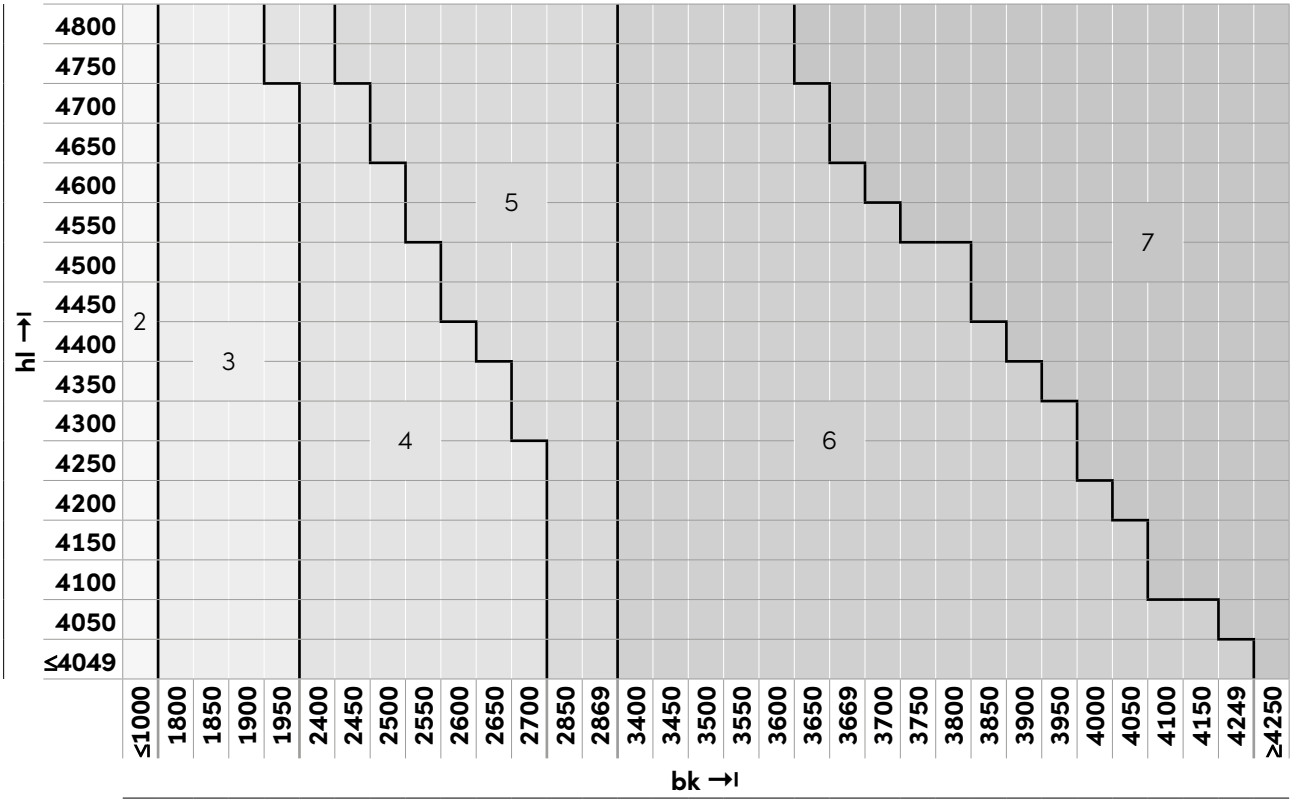

Standard motor position 198

Vertical connections | Standard motor position

Standard motor position

Number of bearings	Standard motor position
2	
3	
4	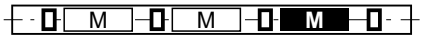
5	
6	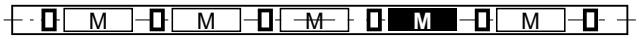
7	

▯ Bearing
M Standard motor position
M Possible motor position (on request)

Cable fastenings

Transverse and holding force

Projection	20 - 40	45 - 70
per fastening point at least	1000 N	1500 N

S

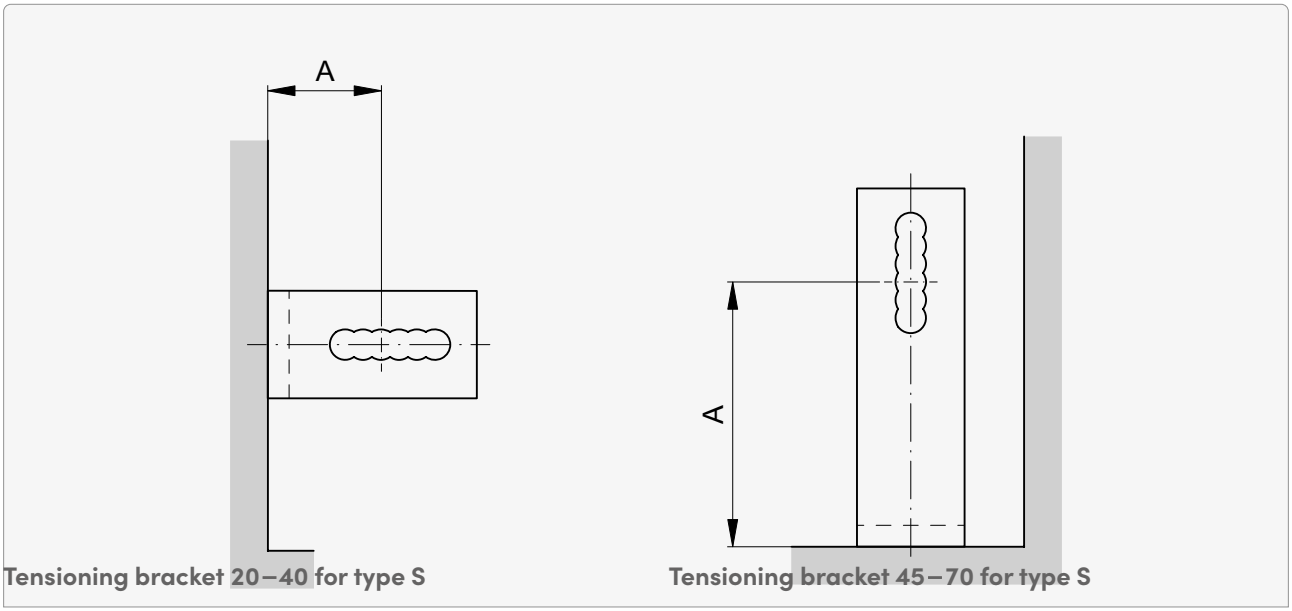

Tensioning bracket 20–40 for type S

Tensioning bracket 45–70 for type S

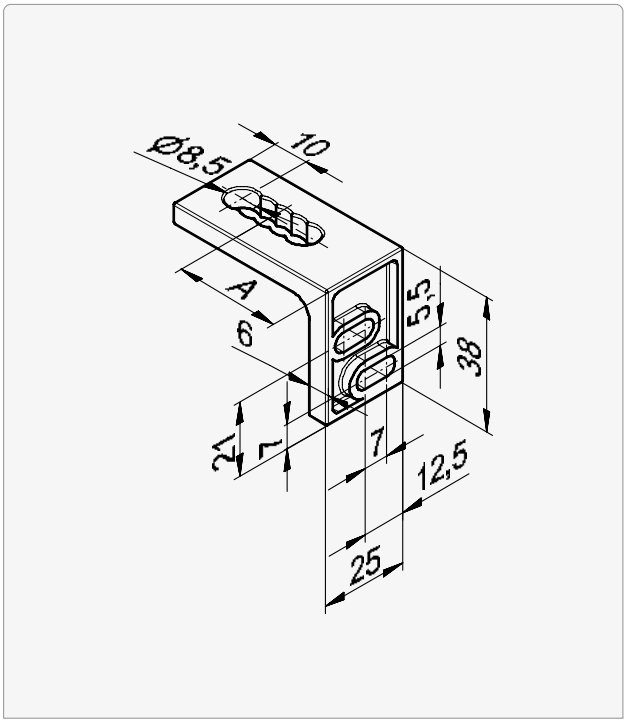

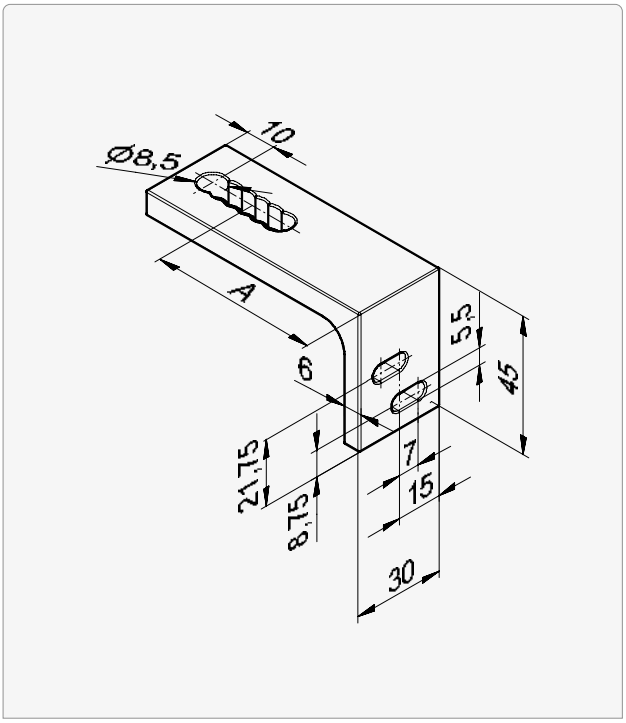

A
20 ... 40*

A
45 ... 70*

* in 5 mm steps

Cable fastenings

Transverse and holding force

Projection	75 - 130	135 - 190
per fastening point at least	2300 N	2800 N

Tensioning bracket 75–130 for type S

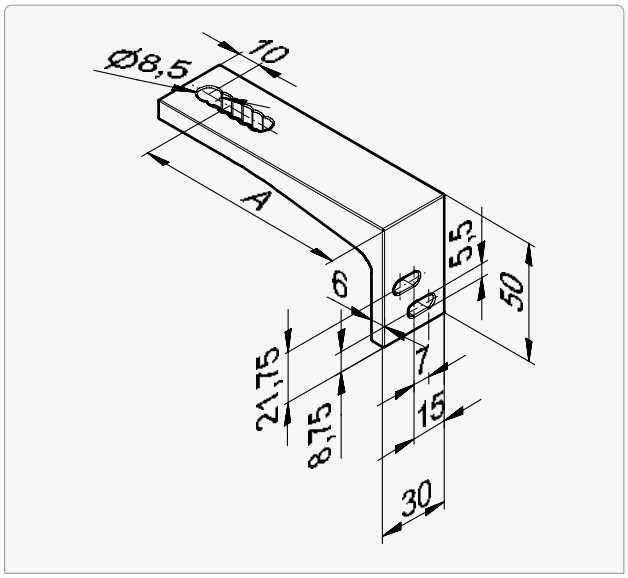

A
75 ... 100*
105 ... 130*

Tensioning bracket 135–190 for type S

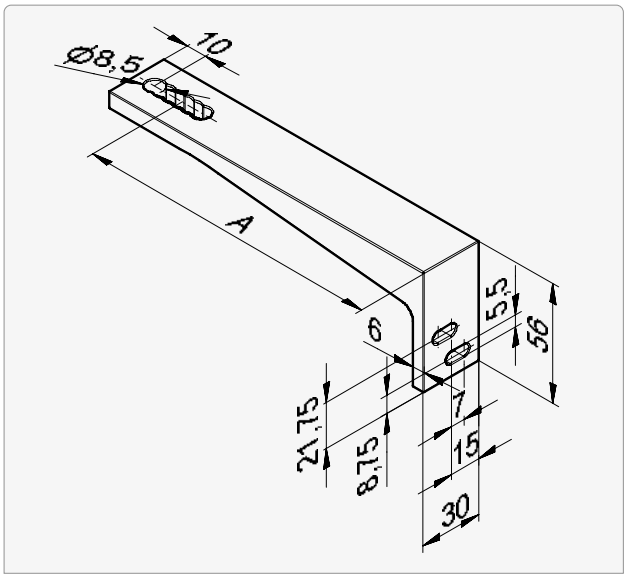

A
135 ... 160*
165 ... 190*

* in 5 mm steps

NU Windowsill installation

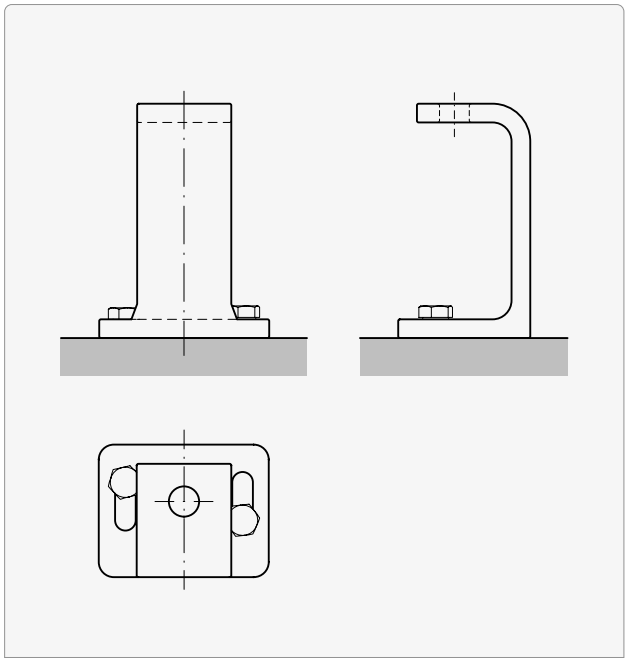

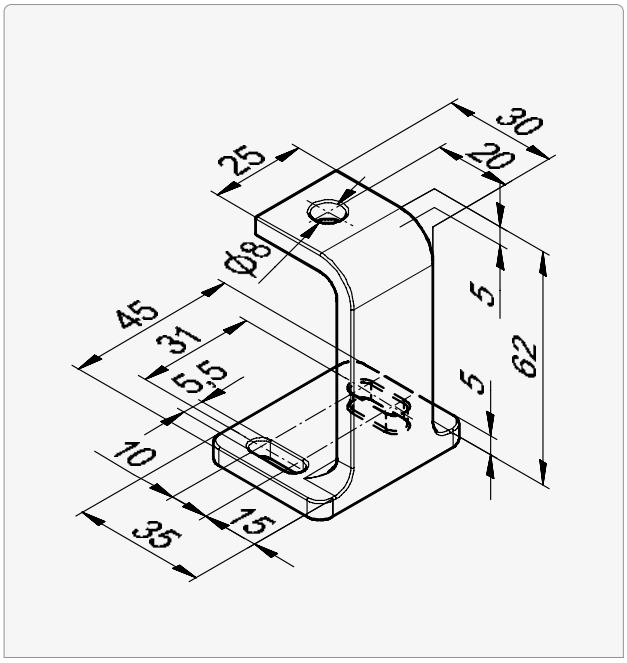

Transverse and holding force per fastening point at least 1200 N.

Connected systems

System width

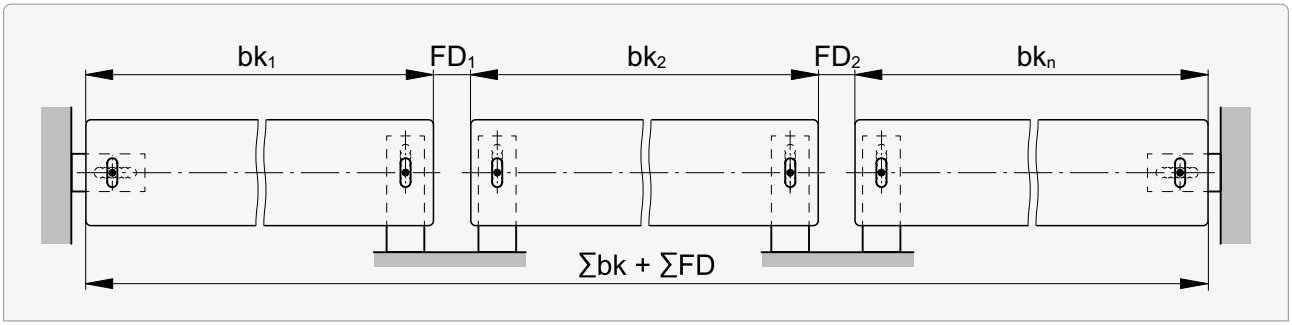

Distance between guides FD

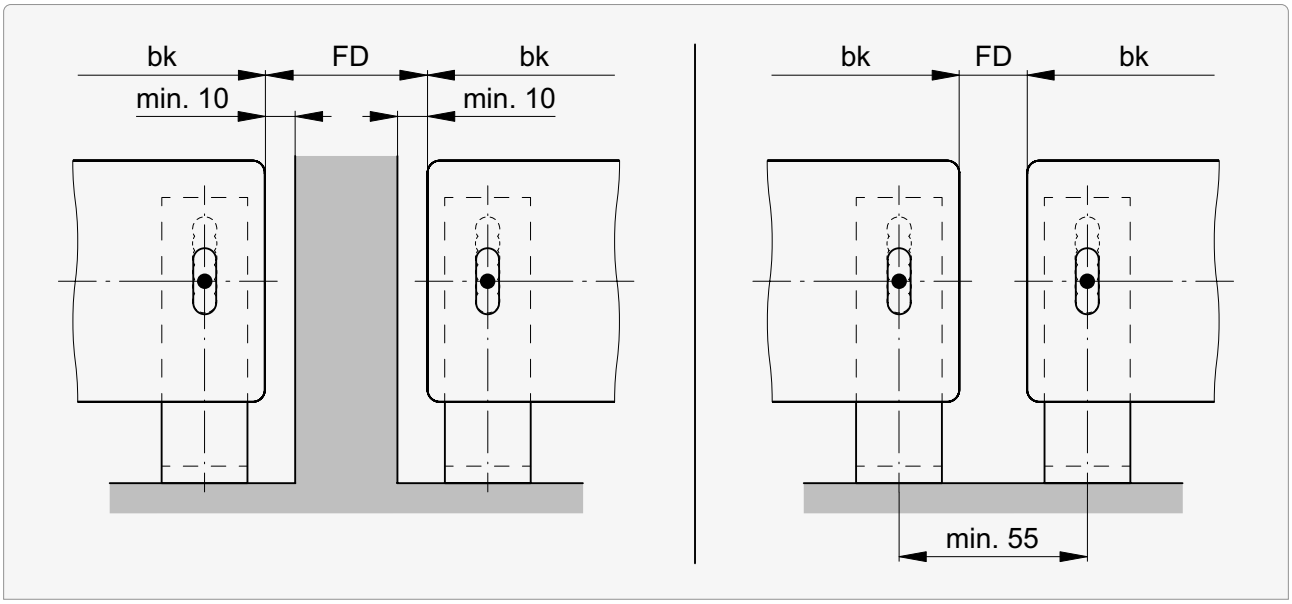

FD min.	FD max.
15	1000

Opening for connected blinds 231

Connected systems

Drive position

Gearbox

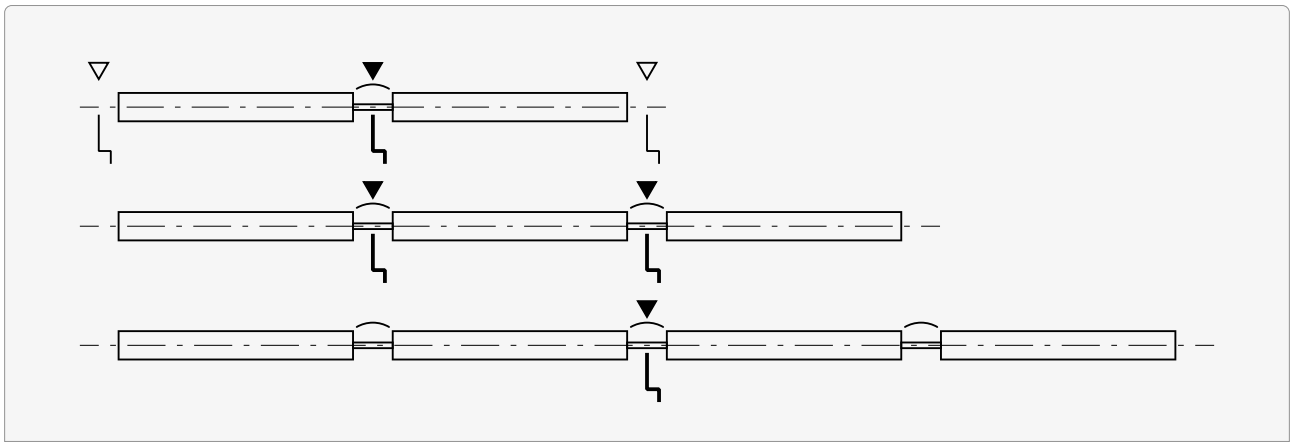

Motor

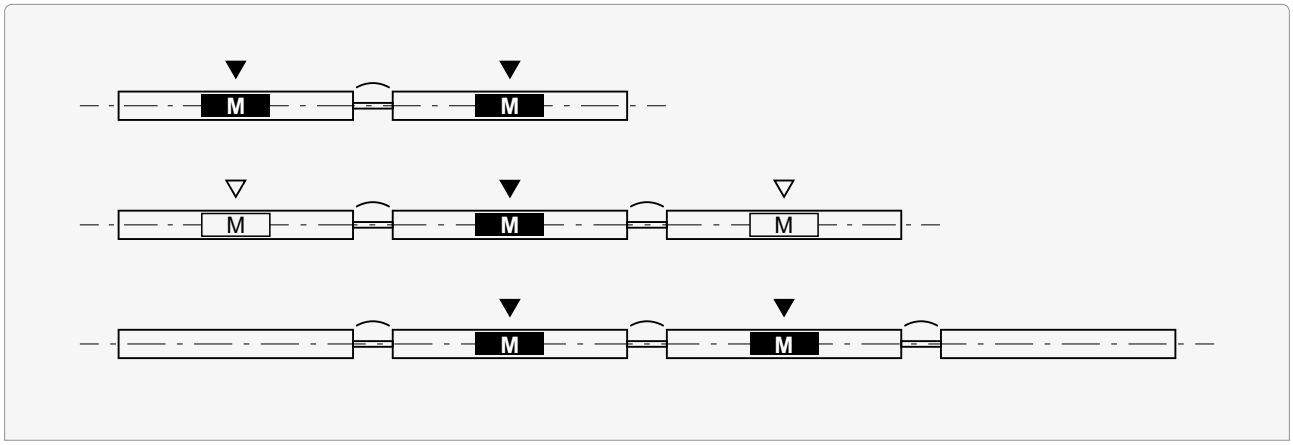

▼ Standard drive position
▽ Possible drive position

Opening for connected blinds

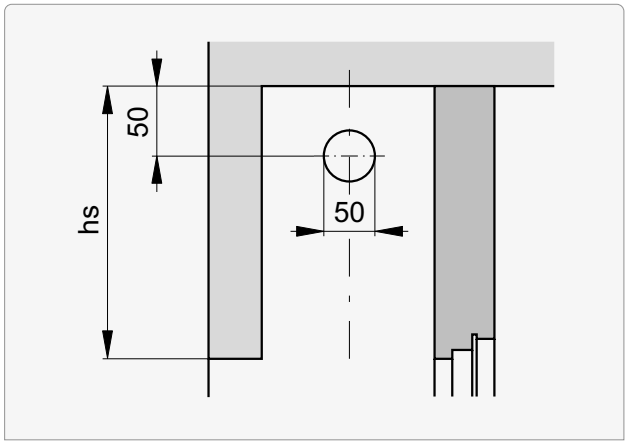

Solomatic® II

Specifications	
Limit dimensions Solomatic® II	**234**
Limit dimensions Solomatic® II Box	**234**

Mounting situations	
Built-in system	**235**
Built-in system with cover	**237**
Installation system with box	**239**
Header dimensions | Heights of package	**241**
Slat profiles	**243**
End rails	**243**
Beginning distance | Slot spacing	**244**
Housing fastening	**245**
Number of box supports	**247**
Fixation for box base profile	**248**
Technical data of motors	**249**

Rail guide	
Guide rails	**250**
Sections | Details	**251**
Sections for crank drive (MBMA)	**254**
Vertical connections | Standard motor position	**255**

Fastenings	
Guide rail installation (principle)	**260**
Guide rail fastenings (principle)	**262**
Guide extension and facet	**270**
Guide rail cut-outs in windowsill area	**273**
Guide rail end for suspended guide rails	**275**
Installation window	**276**
Fastening points	**277**

Drive	
Connected systems	**281**

Cable guide

Cable guide **283**
Sections | Details **283**
Sections for crank drive (MBMA) **285**
Additional cables **286**
Vertical connections | Standard motor position **287**

Fastenings

Cable fastenings **292**

Drive

Connected systems **294**

Limit dimensions Solomatic® II

Single blind

Operation	Width min. (bk)	Width[2] max. (bk)	Height min. (hl)	Height max. (hl)	Surface[3] max. [m²]
Crank drive	500*	4500	440	4500	11
Motor drive	600				15

Connected systems

Operation	Width[2] max. (bk)	Blinds max.	Surface[3] max. [m²]
Crank drive[1]	10000	4	11
Motor drive[4]			24

The guide distance **FD** must be at least 15 mm with cable guide.

[1] A max. of 2 blinds may be connected on each side of the gearbox.

* with MBMA– on request (depending on gear position)

Limit dimensions Solomatic® II Box

Single blind

Operation	Width min. (bk)	Width[2] max. (bk)	Height min. (gh)	Height max. (gh)	Surface[3] max. [m²]
Motor drive	600	4500	605[5] 735[6]	4845[5] 4760[6]	11

Connected systems

Operation	Width[2] max. (bk)	Blinds max.	Surface[3] max. [m²]
Motor drive[4]	10000	4	24

[2] For buildings and high-rise structures, which are exposed to high winds, this maximum value should be decreased as required. Also see wind classes data sheet.

[3] If crank drive is in slat area: maximum surface area and crank position available on request.

[4] For 3 or 4 blinds, the motor should be positioned in the center.

[5] Solomatic® II Box guide rail

[6] Solomatic® II Box cable guide

Definitions of dimensions 327

Built-in system

Vertical section: Guide rail conventional

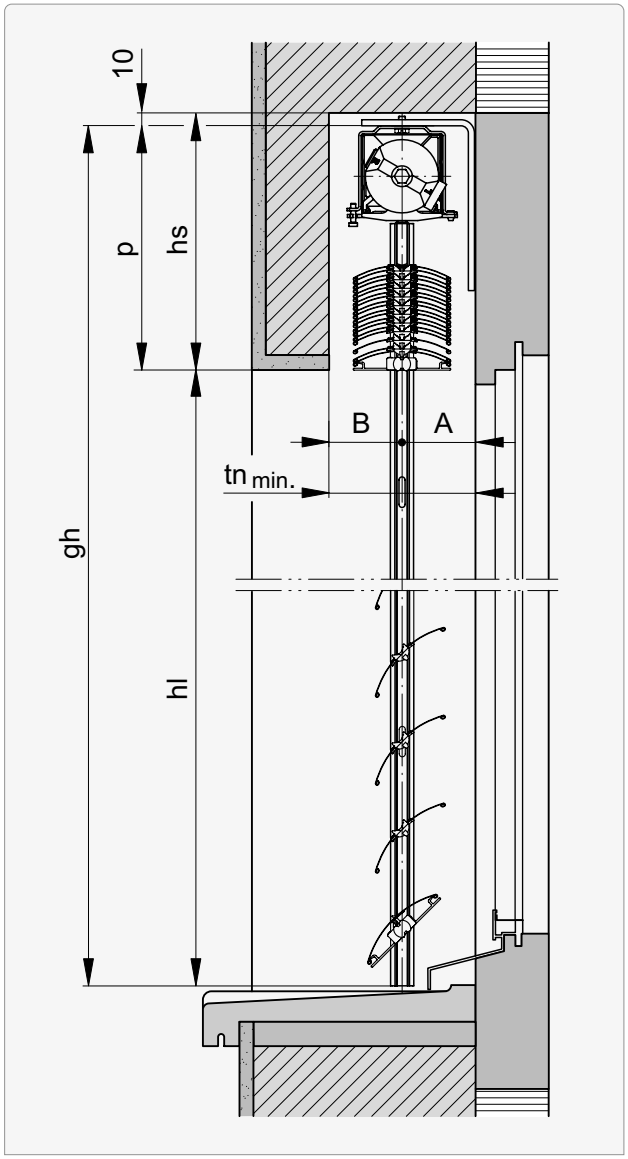

Vertical section: Guide rail Fix-L

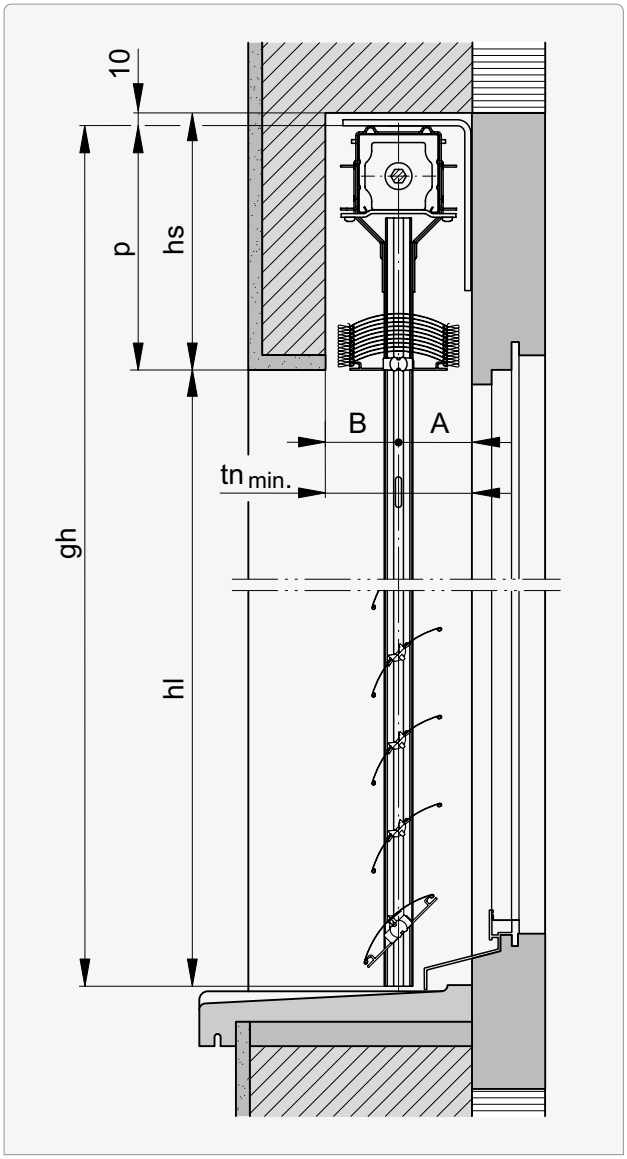

Horizontal section: Guide rail conventional

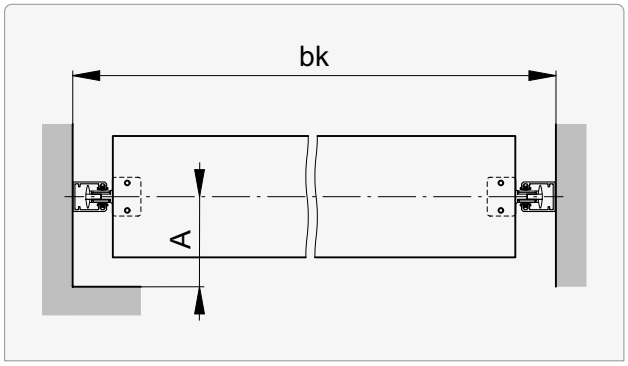

Horizontal section: Guide rail Fix-L

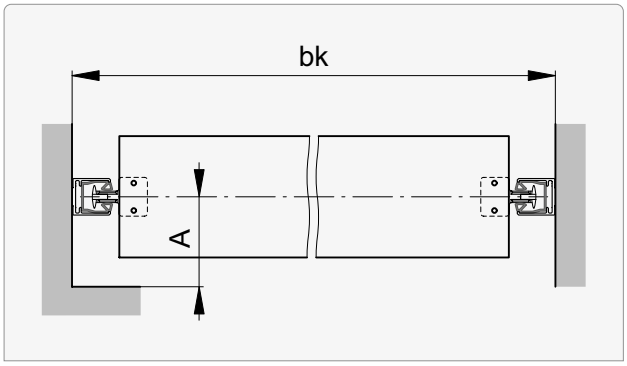

Sections | Details 251

Values for **A**, **B** and **tn** 241

Built-in system

Vertical section: Guide rail Fix

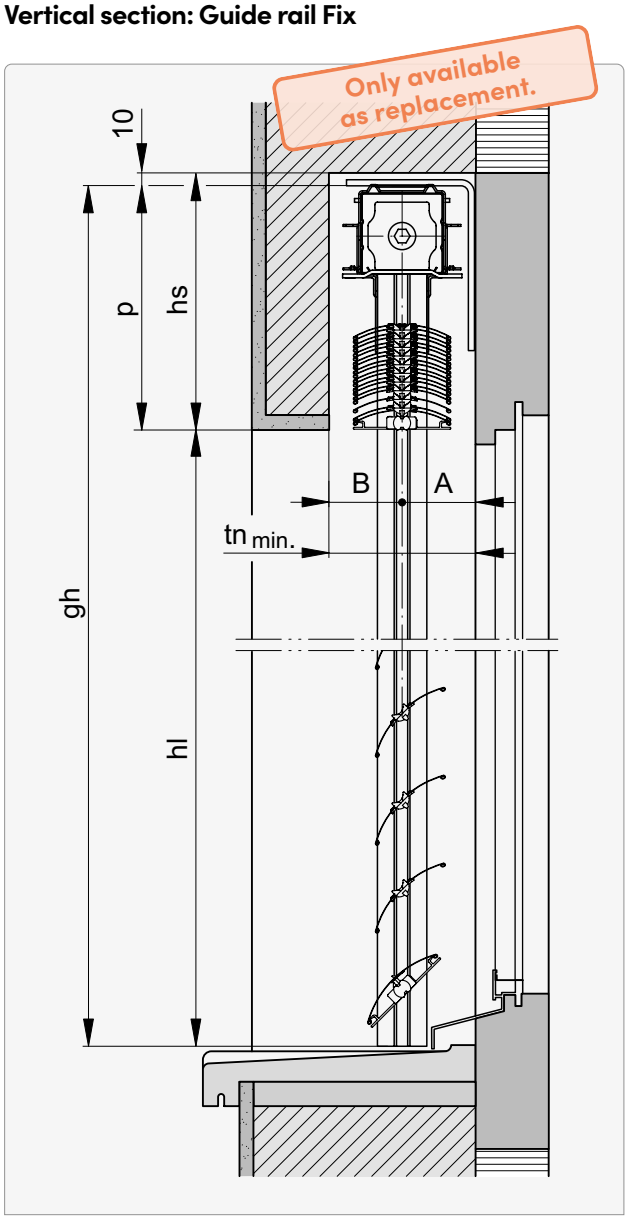

Vertical section: Cable guide

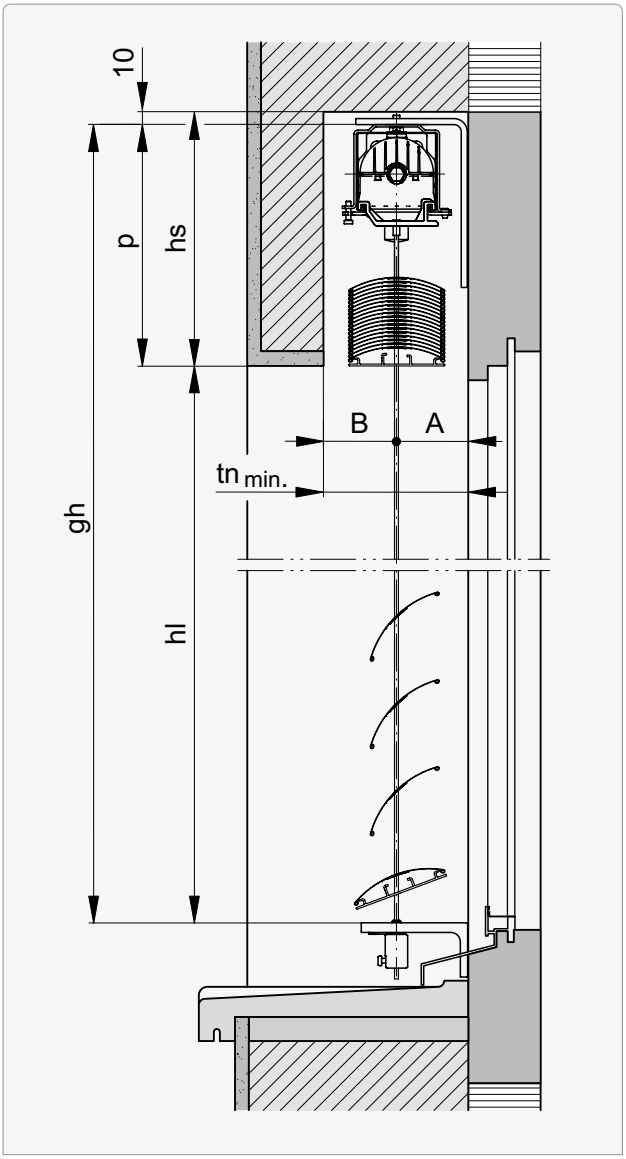

Horizontal section: Guide rail Fix

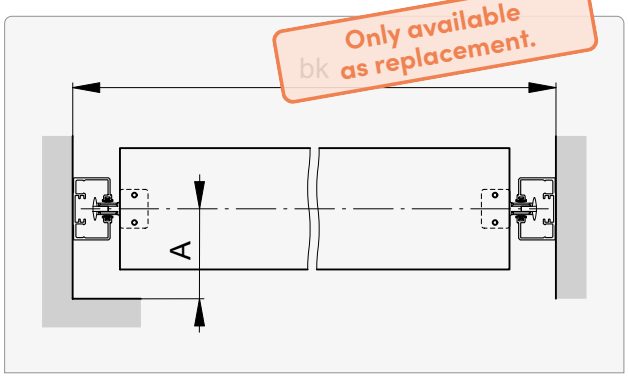

Horizontal section: Cable guide

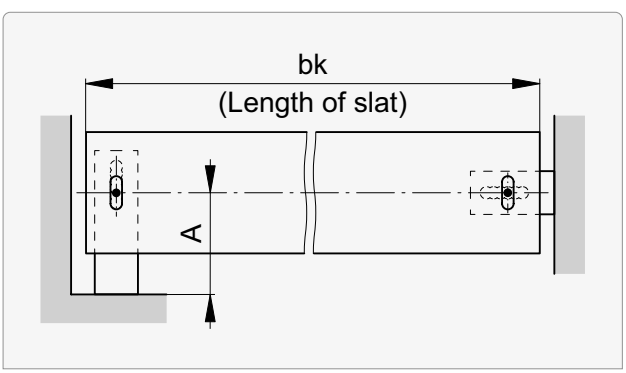

Sections | Details ..... 251 | 283

Values for **A**, **B** and **tn** 241

Built-in system with cover

Vertical section: Guide rail conventional

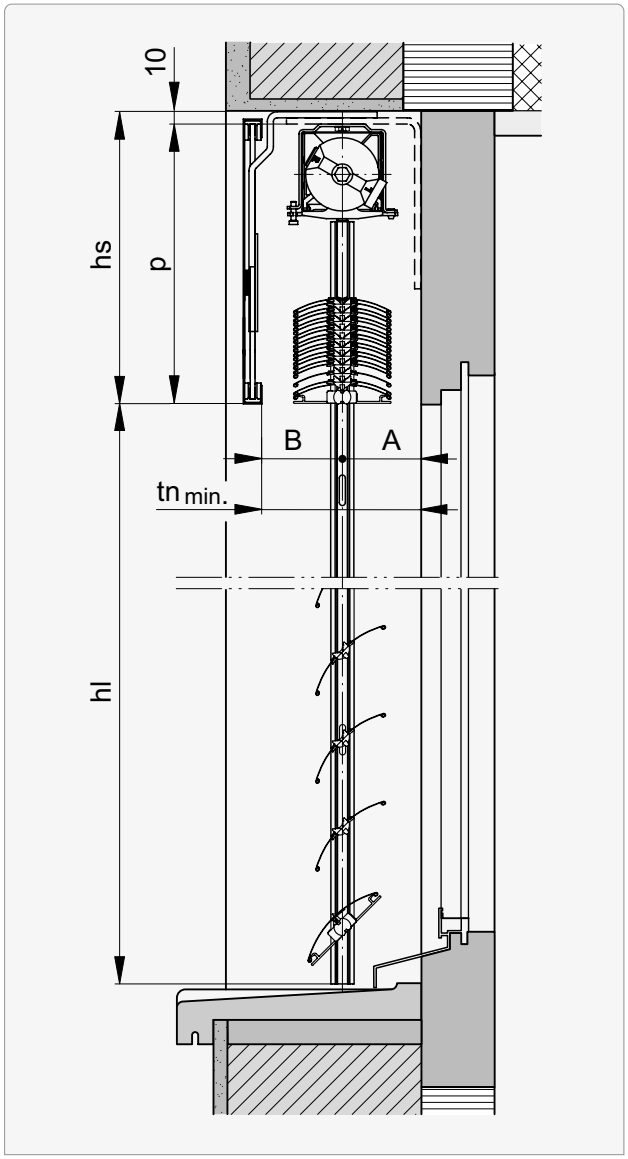

Vertical section: Guide rail Fix-L

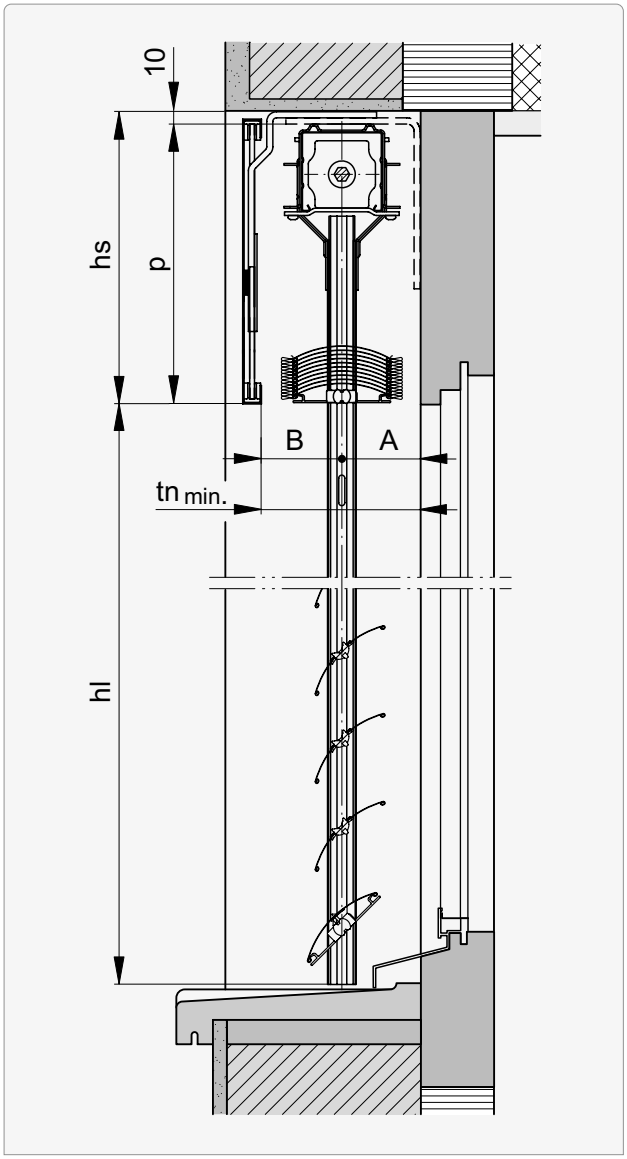

Horizontal section: Guide rail conventional

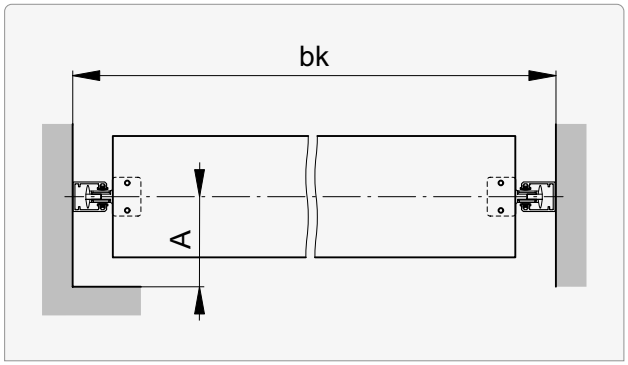

Horizontal section: Guide rail Fix-L

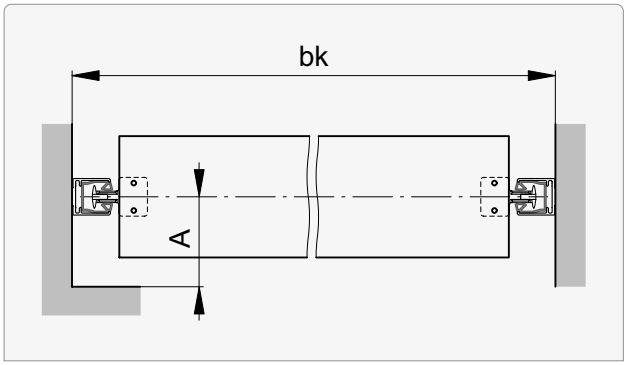

Sections | Details 251

Values for **A**, **B** and **tn** 241

Built-in system with cover

Vertical section: Guide rail Fix

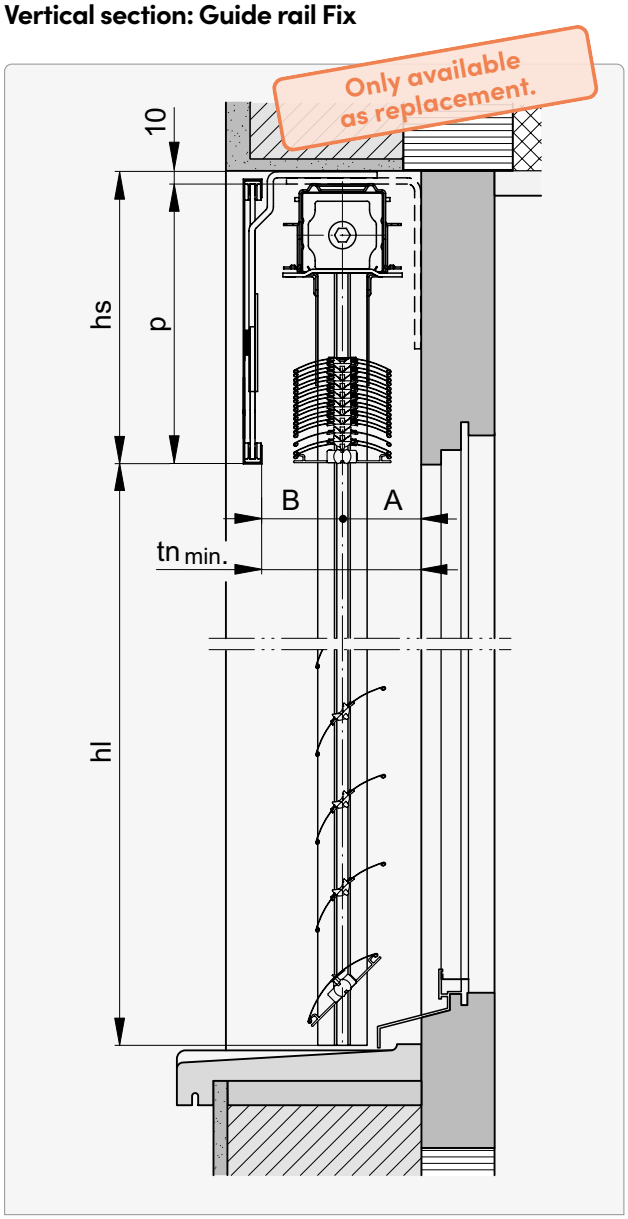

Vertical section: Cable guide

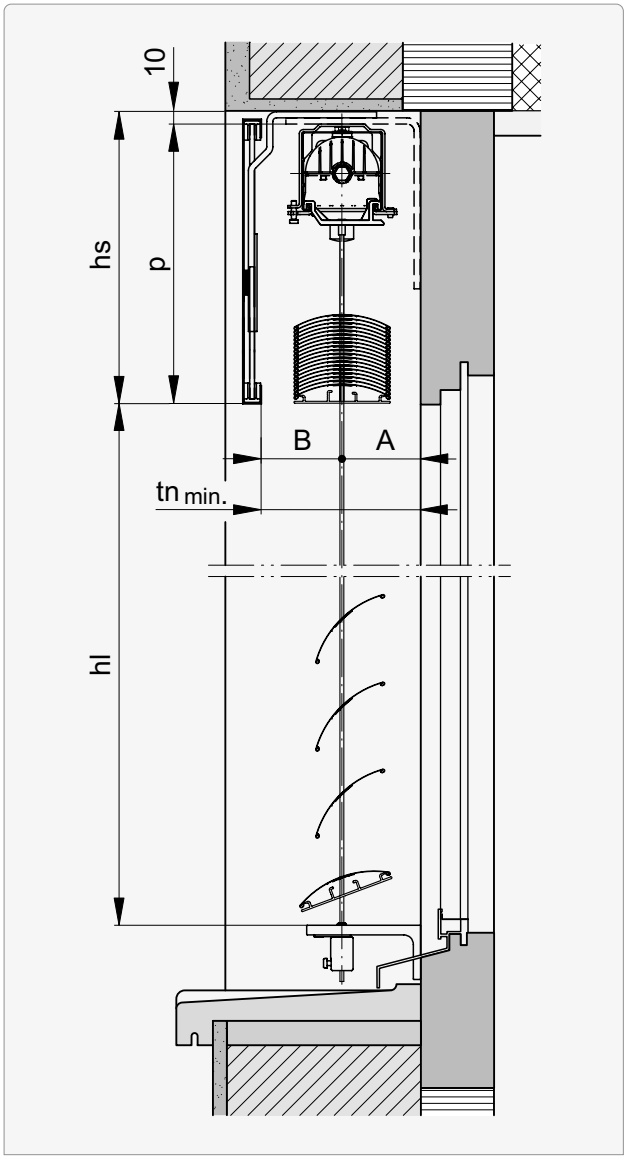

Horizontal section: Guide rail Fix

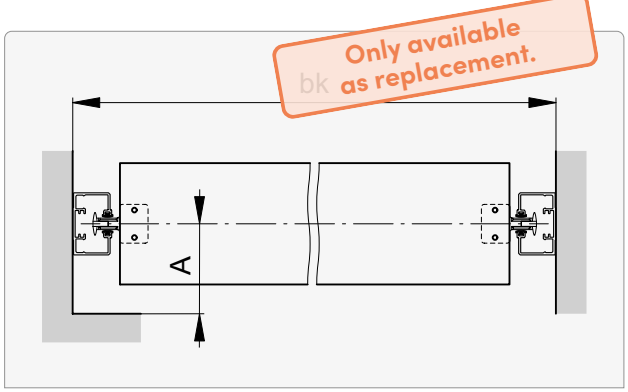

Horizontal section: Cable guide

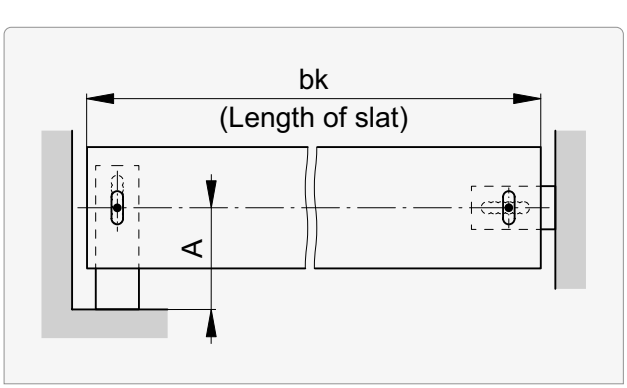

Sections | Details ..... 251 | 283

Values for **A**, **B** and **tn** 241

Installation system with box

Vertical section: Guide rail conventional

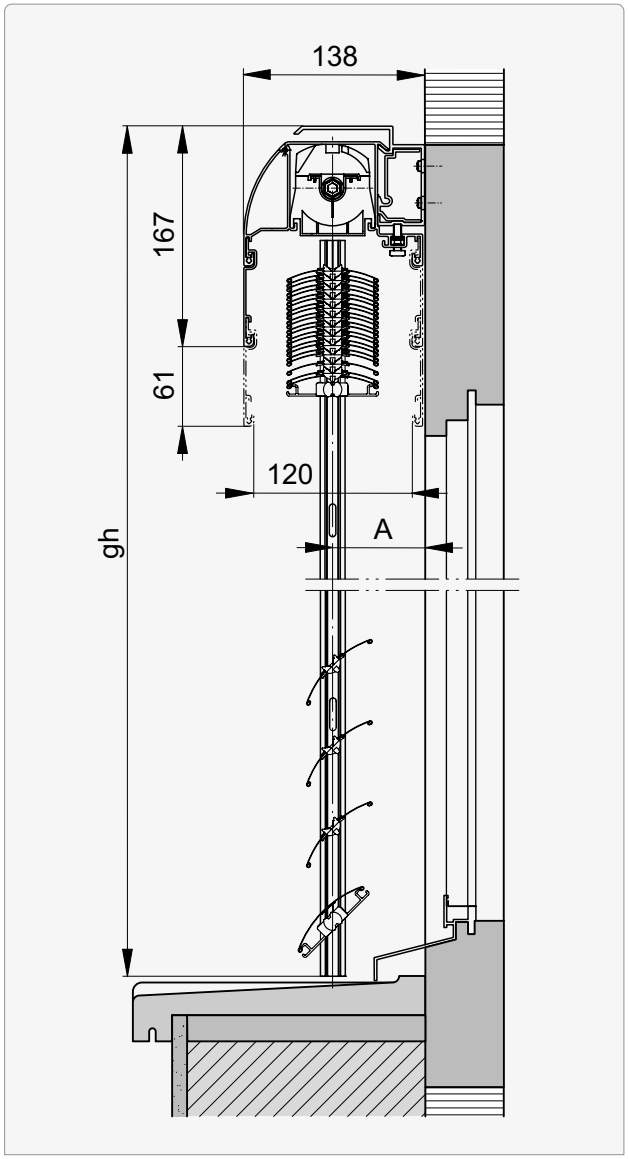

Box round | Slat package covered (standard)

Vertical section: Cable guide

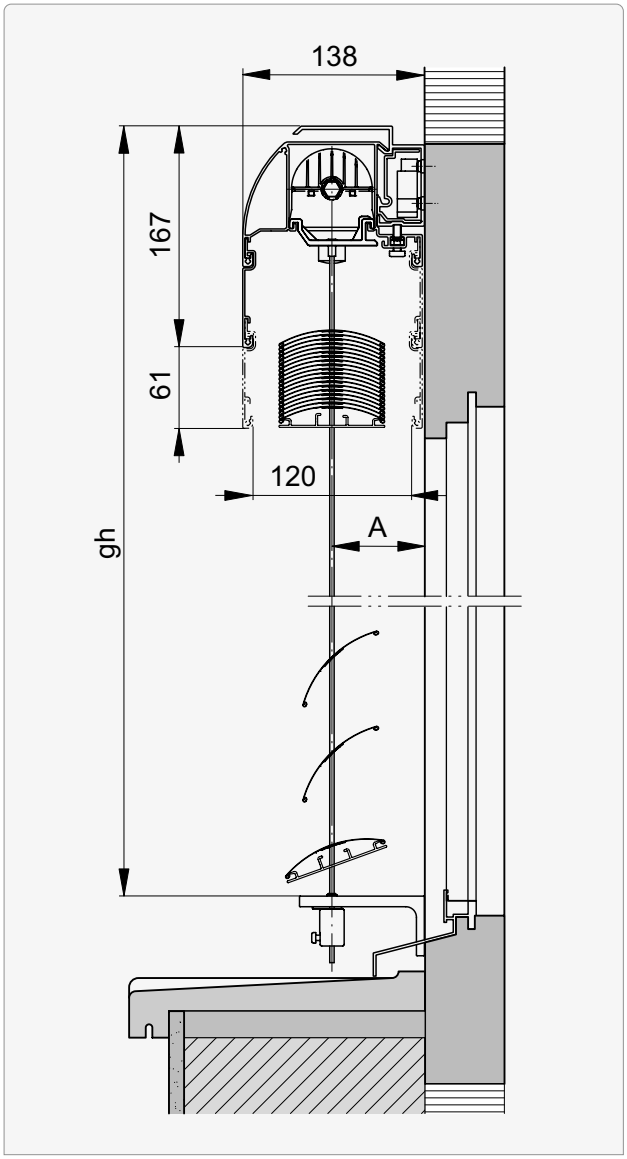

Box round | Slat package covered (standard)

Horizontal section: Guide rail conventional

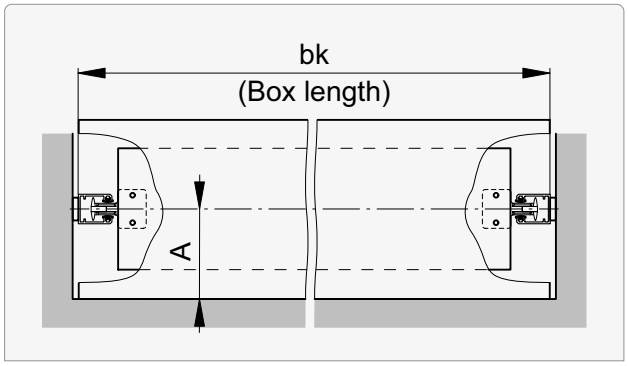

Horizontal section: Cable guide

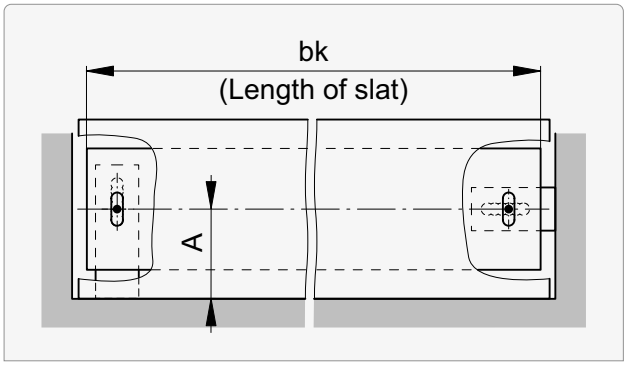

Sections | Details ..... **251** | **283**

Values for **A**, **B** and **tn** **241**

Installation system with box

Vertical section: Guide rail conventional

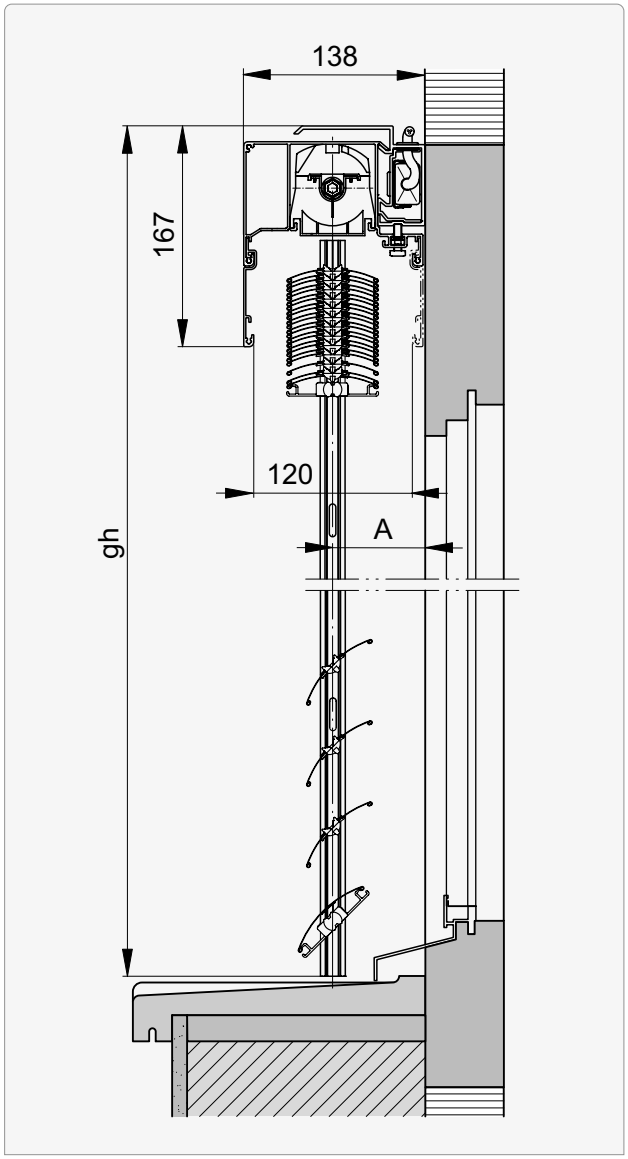

Box square | Slat package visible

Vertical section: Cable guide

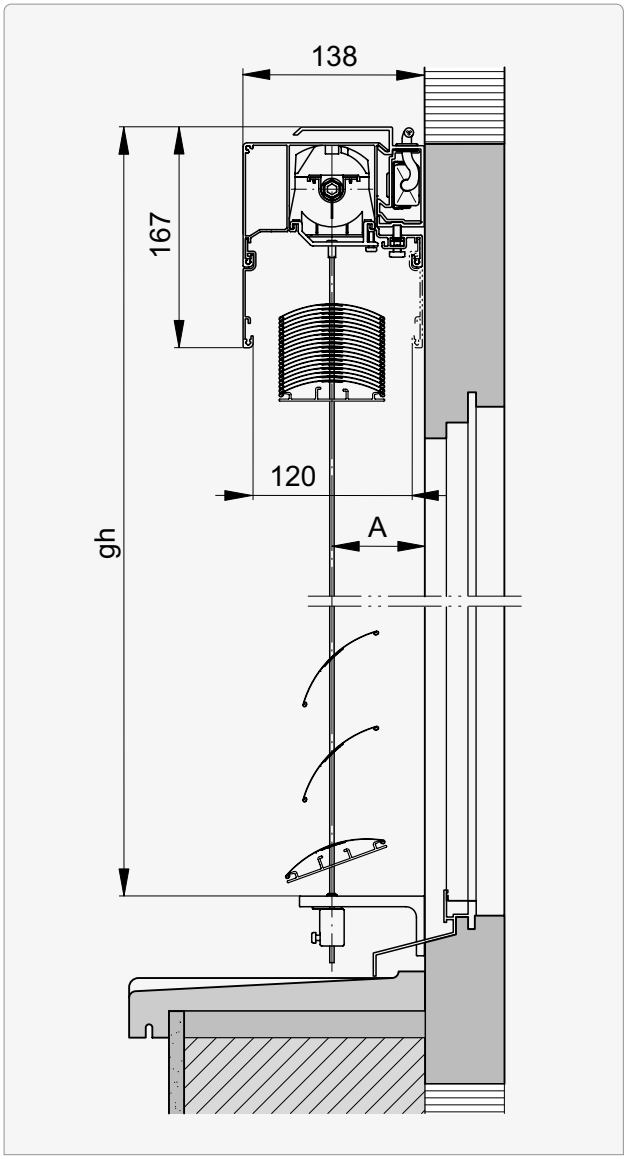

Box square | Slat package visible

Horizontal section: Guide rail conventional

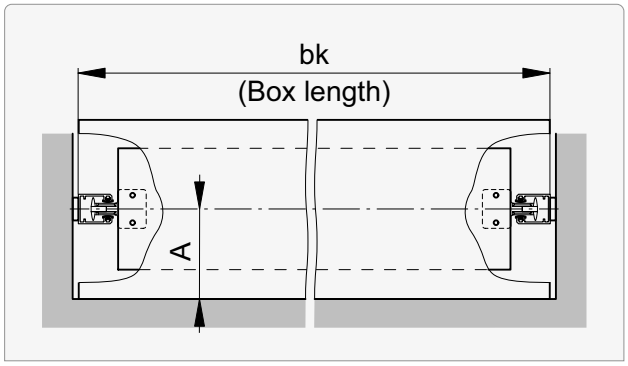

Horizontal section: Cable guide

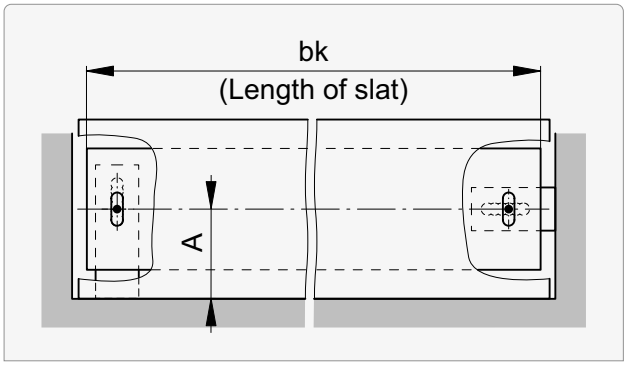

Sections | Details ..... **251** | **283**

Values for **A**, **B** and **tn** **241**

Header dimensions | Heights of package

Solomatic® II 70

hl →I	P min.	hs[1]	hl →I	P min.	hs[1]	hl →I	P min.	hs[1]	hl →I	P min.	hs[1]
1000	170	180	**1900**	230	240	**2800**	285	295	**3700**	345	355
1050	185	195	**1950**	230	240	**2850**	285	295	**3750**	345	355
1100	185	195	**2000**	230	240	**2900**	285	295	**3800**	345	355
1150	185	195	**2050**	245	255	**2950**	285	295	**3850**	345	355
1200	185	195	**2100**	245	255	**3000**	300	310	**3900**	345	355
1250	200	210	**2150**	245	255	**3050**	300	310	**3950**	345	355
1300	200	210	**2200**	245	255	**3100**	300	310	**4000**	360	370
1350	200	210	**2250**	260	270	**3150**	300	310	**4050**	360	370
1400	200	210	**2300**	260	270	**3200**	300	310	**4100**	360	370
1450	200	210	**2350**	260	270	**3250**	315	325	**4150**	360	370
1500	200	210	**2400**	260	270	**3300**	315	325	**4200**	360	370
1550	215	225	**2450**	260	270	**3350**	315	325	**4250**	375	385
1600	215	225	**2500**	260	270	**3400**	315	325	**4300**	375	385
1650	215	225	**2550**	275	285	**3450**	315	325	**4350**	375	385
1700	215	225	**2600**	275	285	**3500**	330	340	**4400**	375	385
1750	230	240	**2650**	275	285	**3550**	330	340	**4450**	380	390
1800	230	240	**2700**	275	285	**3600**	330	340	**4500**	380	390
1850	230	240	**2750**	285	295	**3650**	330	340			

Version	tn min.	A	B
Built-in system	100*	50	50
Installation system (Box)		70	

[1] With gearbox in slat area: **hs + 20**.
Solomatic® II Reflect: **hs + 5**.
Solomatic® II Box: **hs + 7**.

* + possible addition for protruding weatherboard or doorknobs.
Valid for installation of Solomatic® II conventional and Fix and also Solomatic® II with tensioning cable guide.

Header dimensions are approximate values which may exhibit **negative or positive deviations** depending on the technical circumstances. **A dimensional tolerance of ±5 mm** is observed for the header height.

Header dimensions | Heights of package

Solomatic® II 80

hl →I	P min.	hs[1]	hl →I	P min.	hs[1]	hl →I	P min.	hs[1]	hl →I	P min.	hs[1]
1000	175	185	**1900**	220	230	**2800**	270	280	**3700**	305	315
1050	185	195	**1950**	220	230	**2850**	270	280	**3750**	315	325
1100	185	195	**2000**	220	230	**2900**	270	280	**3800**	315	325
1150	195	205	**2050**	230	240	**2950**	270	280	**3850**	315	325
1200	195	205	**2100**	230	240	**3000**	270	280	**3900**	315	325
1250	195	205	**2150**	230	240	**3050**	280	290	**3950**	315	325
1300	195	205	**2200**	230	240	**3100**	280	290	**4000**	315	325
1350	195	205	**2250**	245	255	**3150**	280	290	**4050**	325	335
1400	195	205	**2300**	245	255	**3200**	280	290	**4100**	325	335
1450	195	205	**2350**	245	255	**3250**	290	300	**4150**	325	335
1500	195	205	**2400**	245	255	**3300**	290	300	**4200**	325	335
1550	210	220	**2450**	245	255	**3350**	290	300	**4250**	340	350
1600	210	220	**2500**	245	255	**3400**	290	300	**4300**	340	350
1650	210	220	**2550**	255	265	**3450**	290	300	**4350**	340	350
1700	210	220	**2600**	255	265	**3500**	290	300	**4400**	340	350
1750	220	230	**2650**	255	265	**3550**	305	315	**4450**	340	350
1800	220	230	**2700**	255	265	**3600**	305	315	**4500**	340	350
1850	220	230	**2750**	270	280	**3650**	305	315			

Version	tn min.	A	B
Built-in system	120*	60	60
Installation system (Box)		70	

[1] With gearbox in slat area: **hs + 20**.
Solomatic® II Reflect: **hs + 5**.
Solomatic® II Box: **hs + 7**.

* + possible addition for protruding weatherboard or doorknobs.
Valid for installation of Solomatic® II conventional and Fix and also Solomatic® II with tensioning cable guide.

Header dimensions are approximate values which may exhibit **negative or positive deviations** depending on the technical circumstances. **A dimensional tolerance of ±5 mm** is observed for the header height.

Slat profiles

Solomatic® II 70

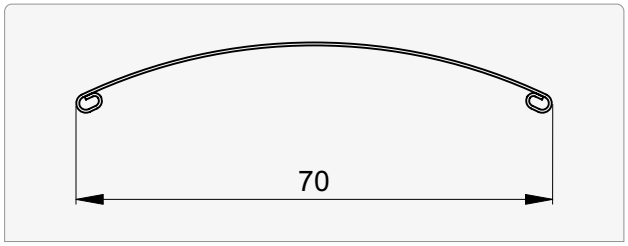

Solomatic® II 80

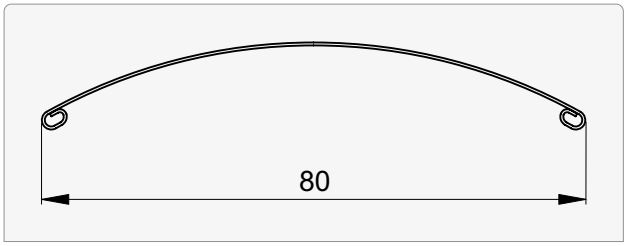

End rails

Solomatic® II 70

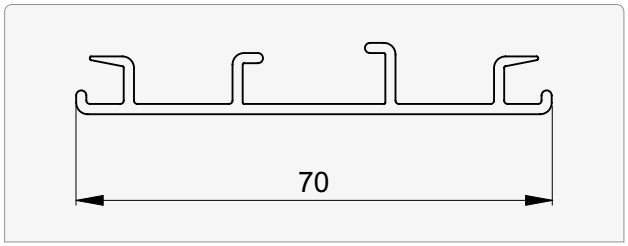

Solomatic® II 80

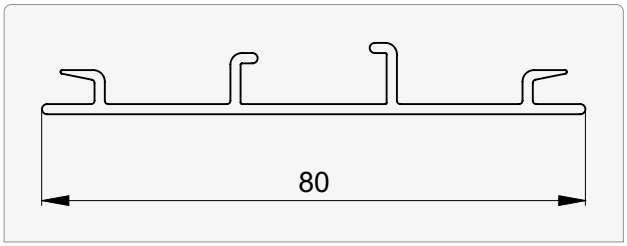

Beginning distance | Slot spacing

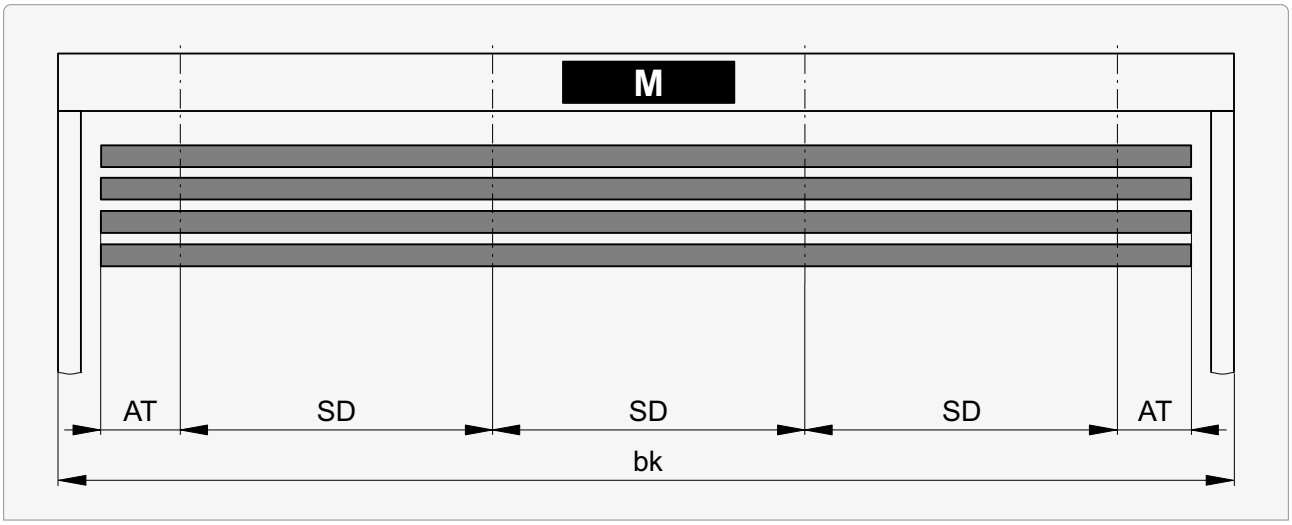

bk	AT min.		SD min.	SD max.
≤610	Conventional	50	250*	1000*
	Fix	60		
	Fix connected	80		
	Cable	67		
611 ... 1250	Conventional Fix Fix connected	100		
611 ... 1230	Cable	117		
>1250	Conventional Fix Fix connected	200		
>1230	Cable	217		

* Standard slot spacing machine fabrication

Deviations from the standard are posible when:

Deviation	Correction
MBMA+ < 40	AT
Support loading too high	AS
Slot spacing < 250	AT + AS
With motor	AT + AS

AT Beginning distance
Distance from beginning of slat to centre of bearing

SD Slot spacing
Distance from centre of bearing (slot) to centre of bearing (slot)

Housing fastening

Transverse and holding force per fastening point at least 2200 N.

At top NO

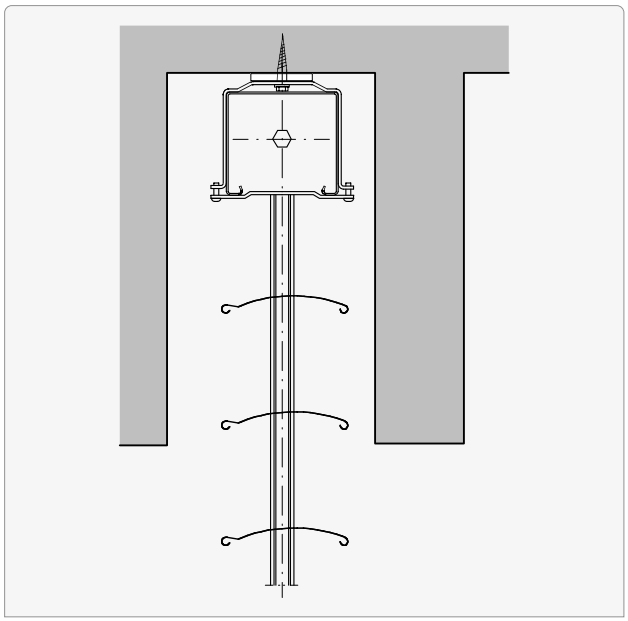

Box support for type KT, for small headers*

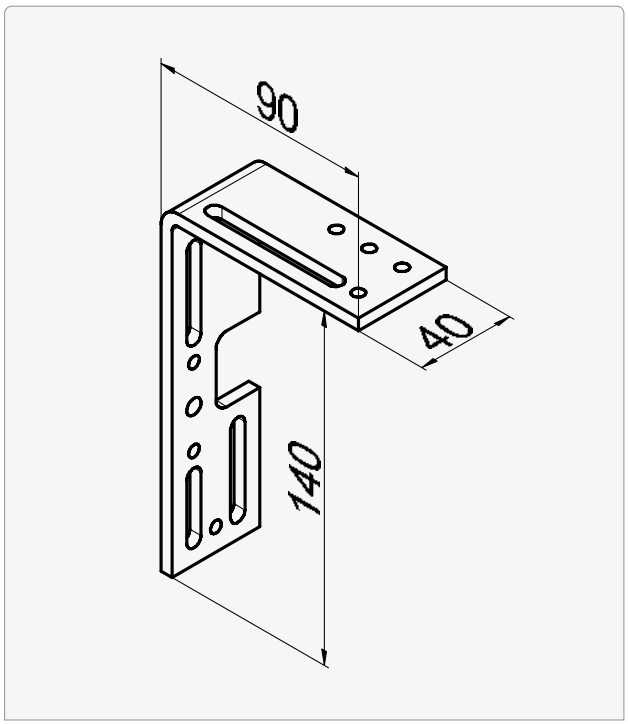

A
140

Box support KT

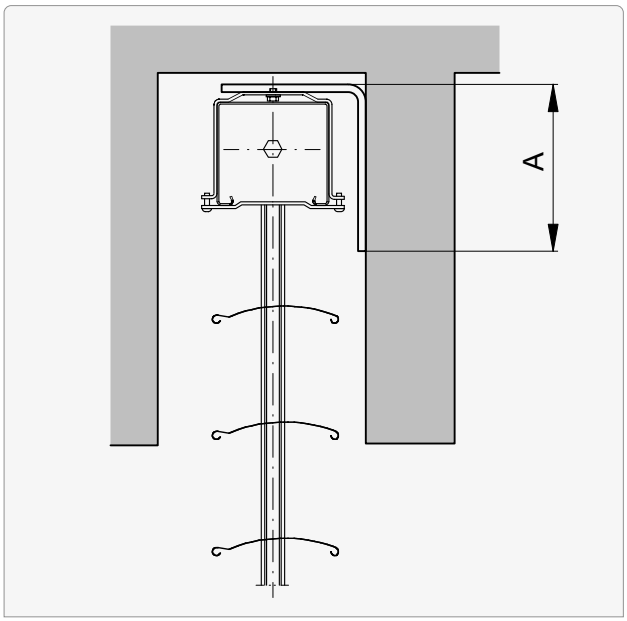

Box support for type KT

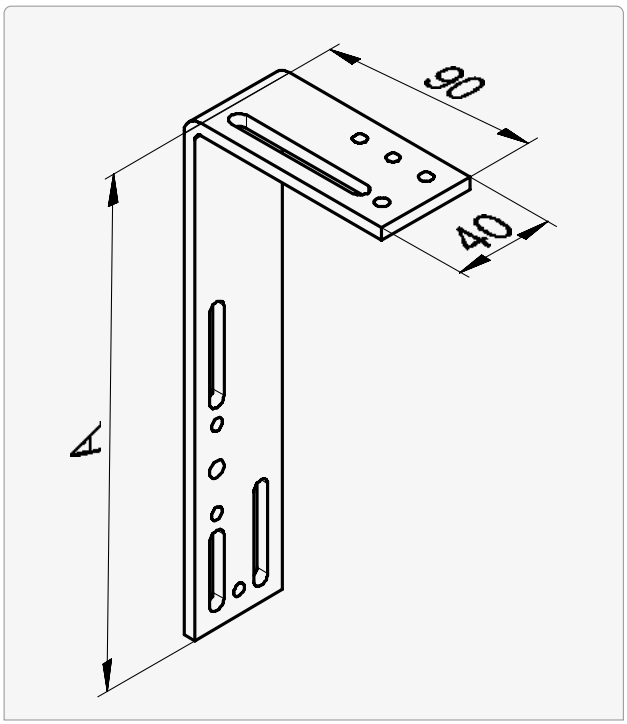

A
200
260

* Header 100

Housing fastening

Transverse and holding force per fastening point at least 2200 N.

Double box support DR

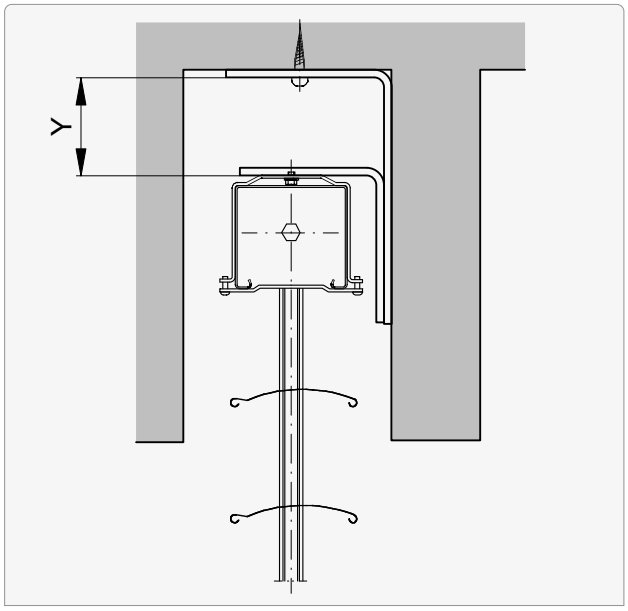

Double box support for type DR

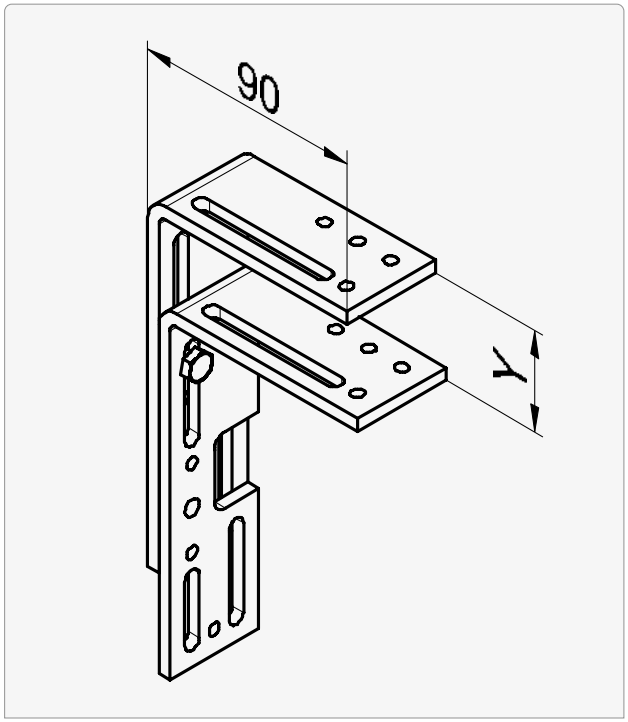

Y
10 ... 75
75 ... 135
135 ... 200

Gallery clip GB

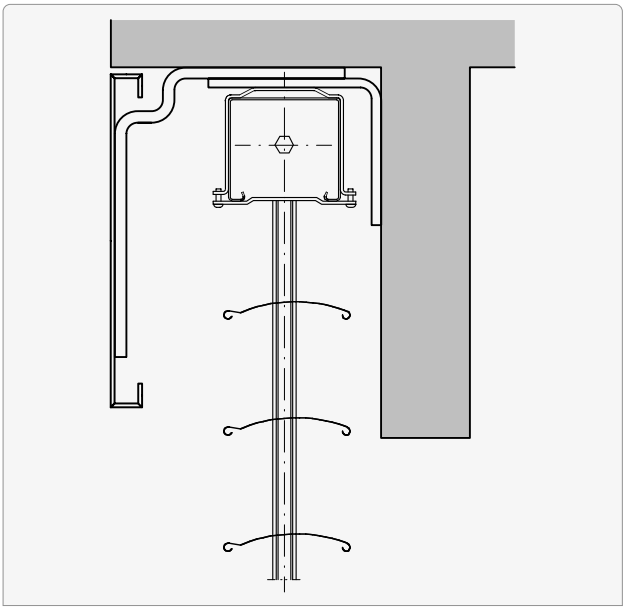

Gallery clip for type GB

See additional documentation at the Griesser Download Center:

Tech Guide "Covers"

Number of box supports

Conventional and cable guides

bk	Quantity
≤ 2500	2
2501 … 3500	3
3501 … 4500	4
> 4500	5

Fix guides | Additional fastenings

bk	Quantity
≤ 2500	0
2501 … 3500	1
> 3500	2

Fixation for box base profile

Transverse and holding force per fastening point at least 2200 N.

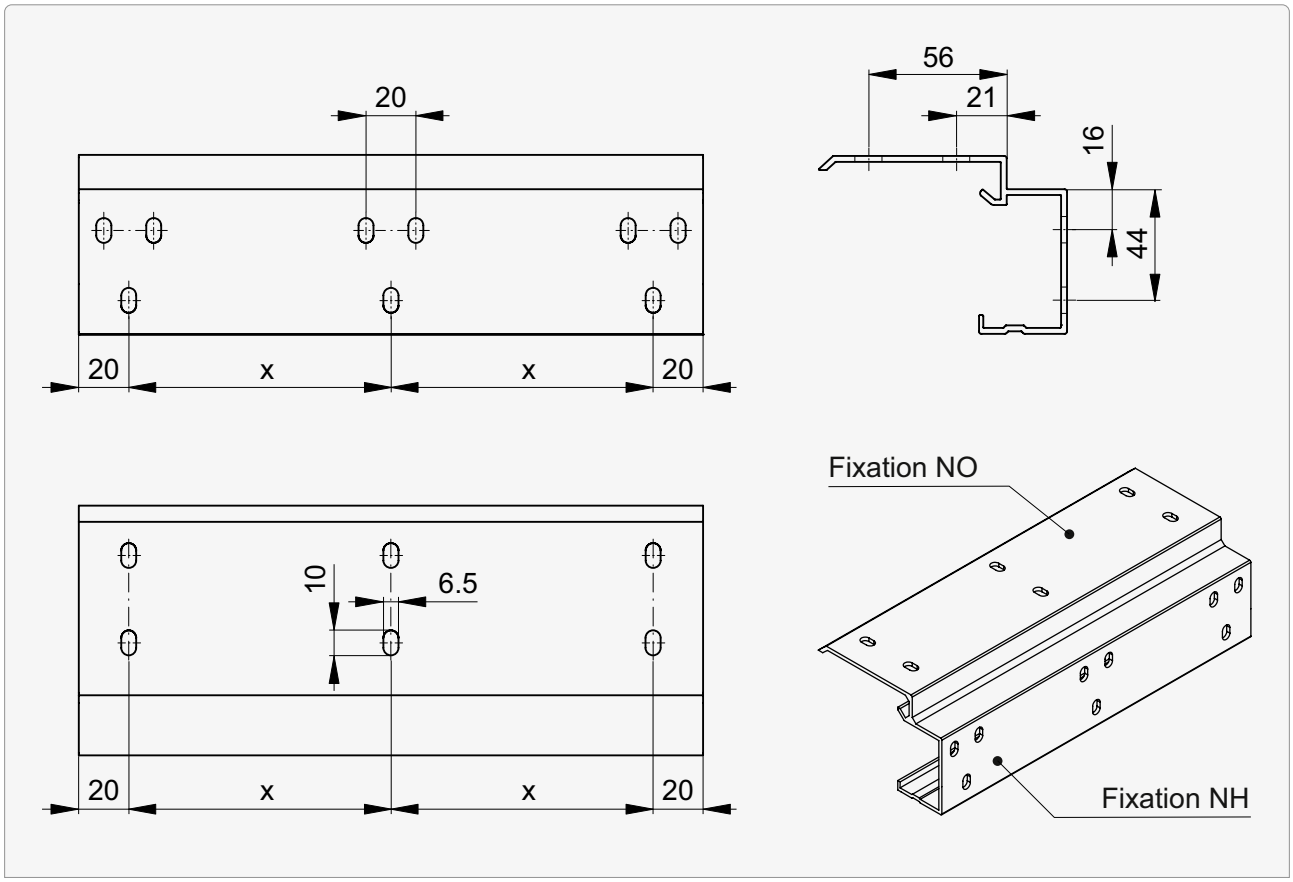

Number of fixation points

bk	Number of fixation points
≤2000	2
2001…3000	3
3001…4000	4
>4000	5

Technical data of motors

Performance characteristics

Type		Limit switch Type	Number of	M [Nm]	n [1/min.]	P [W]	I [A]
Standard							
Elero							
ES...	06.01	mechanical	2	6	26	110	0.50
	09.01			9		170	0.75
E0...	20.01			20		190	1.05
ES...	06.51	mechanical	3	6	26	110	0.50
	09.51			9		170	0.75
E0...	20.51			20		190	1.05
Option							
Somfy							
SH...	06.01	mechanical	2	6	24	95	0.40
	10.01			10		110	0.65
	18.01			18		155	1.00
SW...	06.01	electronic	2	6	24	95	0.40
SI...	10.01			10		110	0.65
SR...	18.01			18		155	1.00
Elero Comfort							
ECM...	06.01	electronic	2	6	26	115	0.50
	09.01			9		156	0.68
	06.51		3	6		115	0.50
	09.51			9		156	0.68
ECB...	06.01	electronic	2	6	26	115	0.50
	09.01			9		156	0.68
	06.51		3	6		115	0.50
	09.51			9		156	0.68

I Current consumption
M Torque
n Rotational speed
P Power consumption

Guide rails

Type E | Single guide

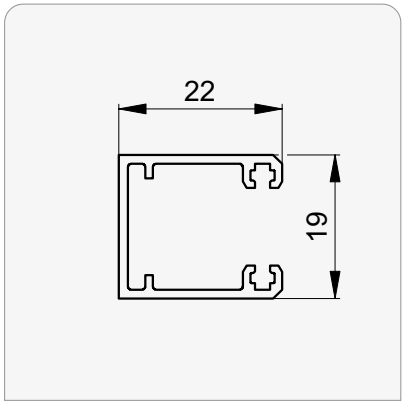

Type L | Fix guide

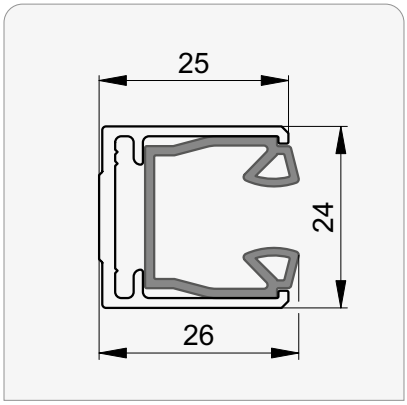

Type F | Fix guide

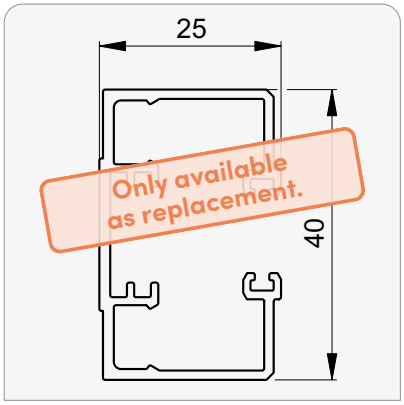

Type D | Double guide

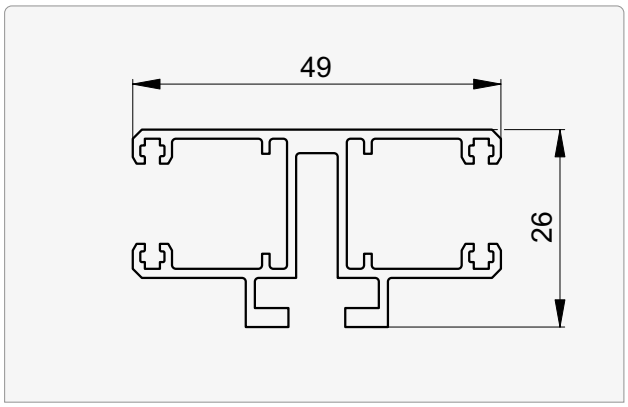

Special guide fastening required

Type C | Single guide

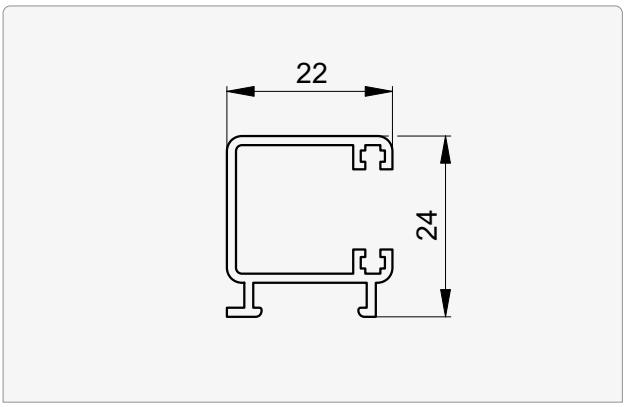

Type R | Curved double guide

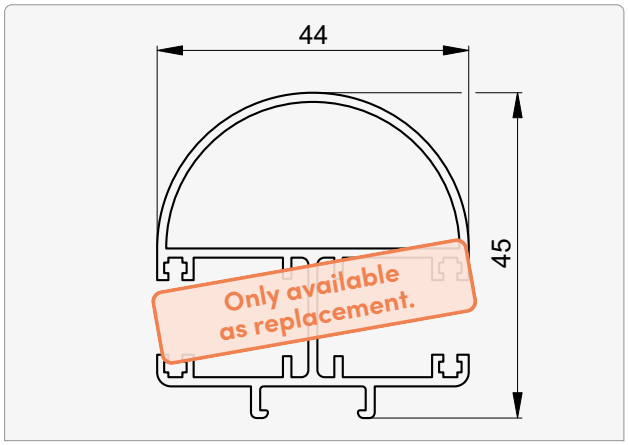

Type T | Double guide

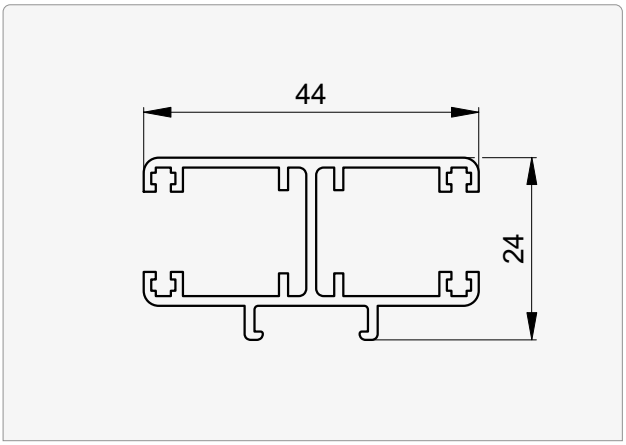

- Distance between guides **FD** **281**
- Fastening points **277**
- Guide extension and facet **270**
- Guide rail fastenings **262**
- Guide rail cut-outs in windowsill area **273**
- Installation window **276**
- Integrated guides **261**

Sections | Details

Horizontal section: Guide rail conventional

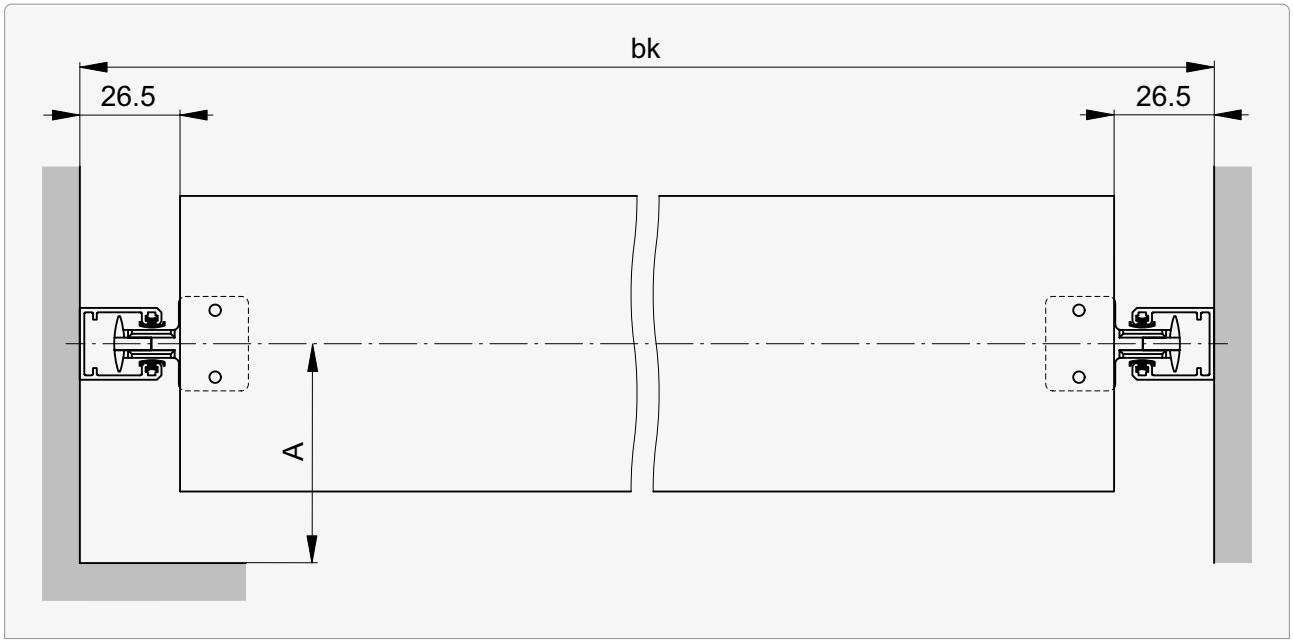

Horizontal section: Guide rail Fix-L

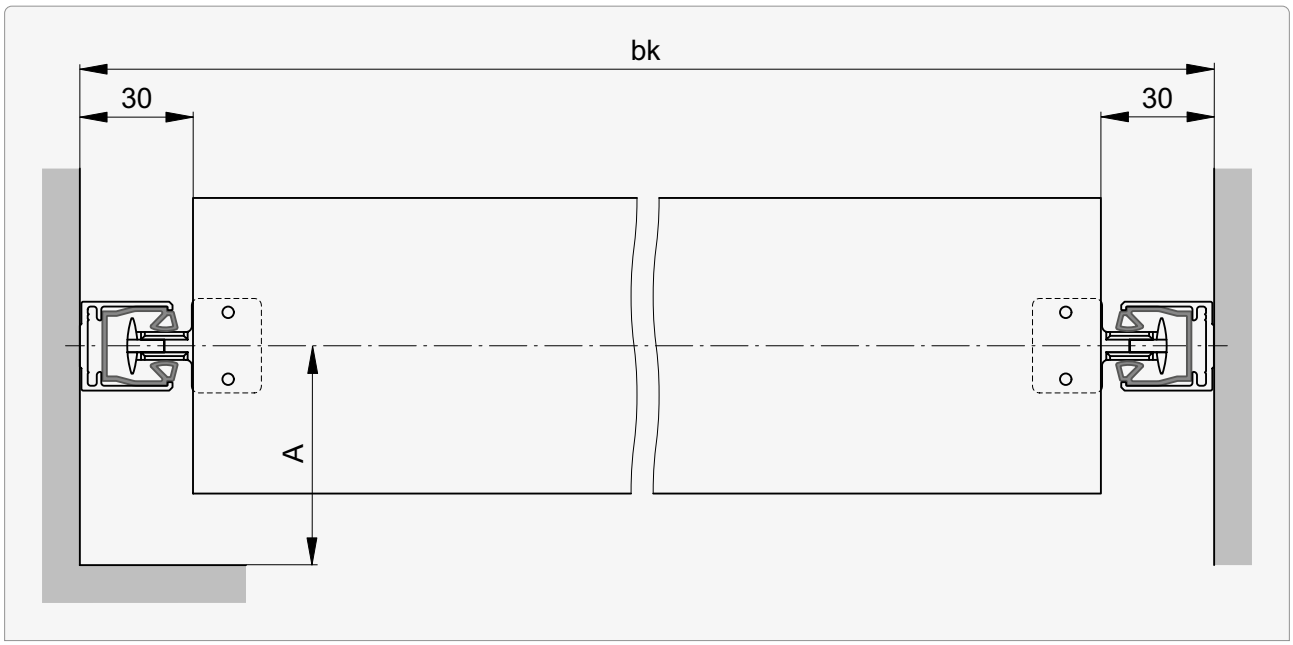

Value for **A**.....**241**

Sections | Details

Horizontal section: Guide rail Fix

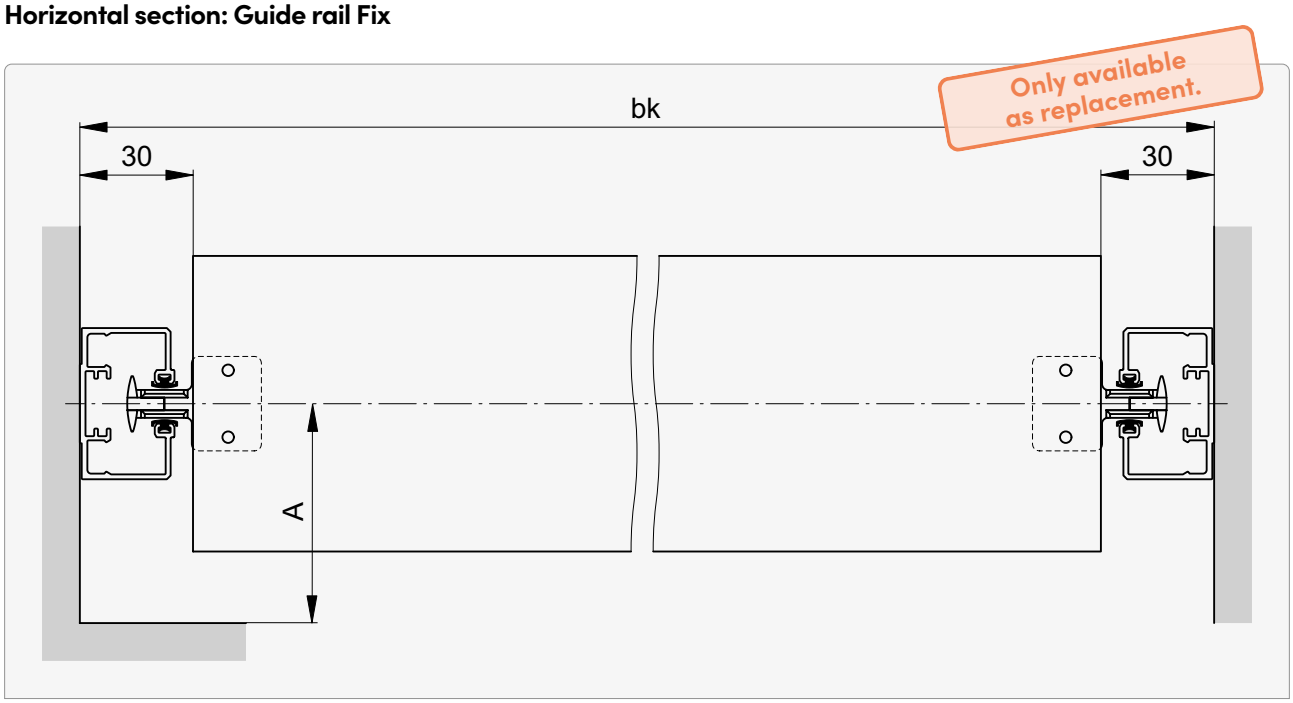

Horizontal section: Box

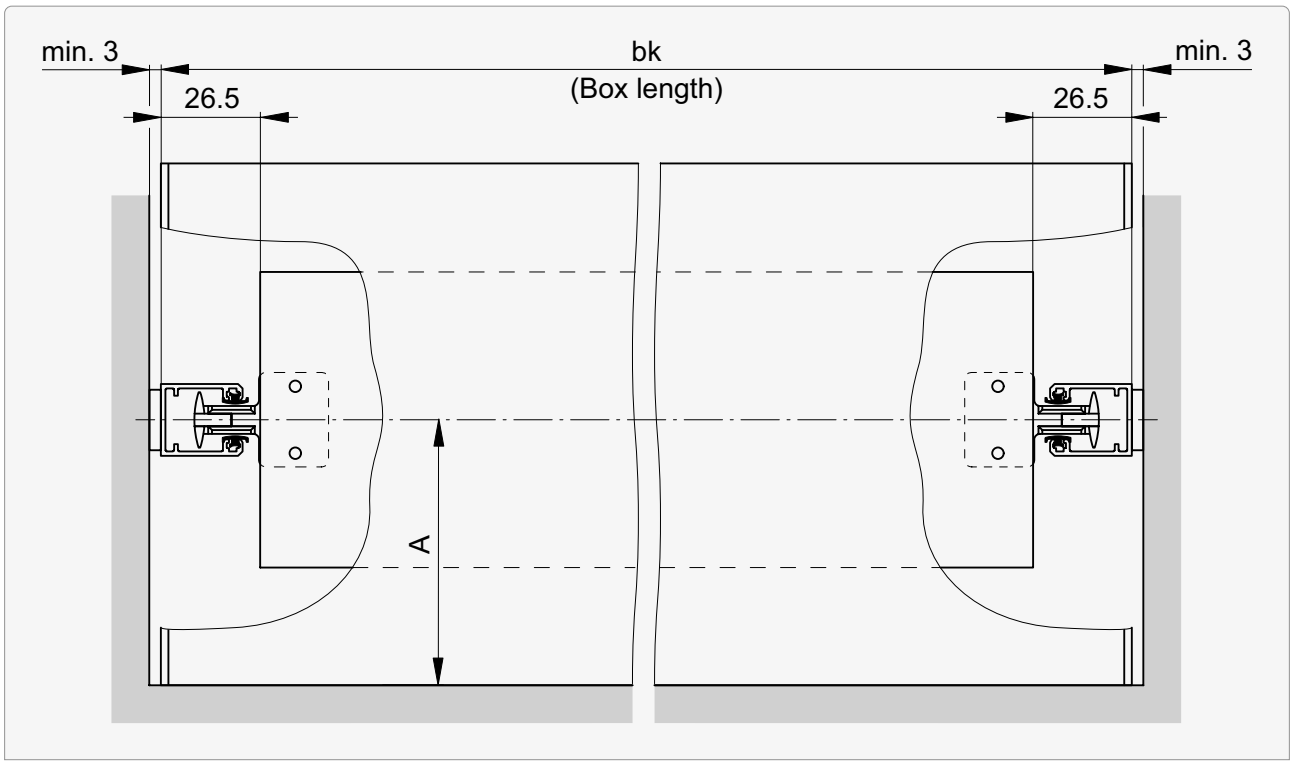

Value for **A**.....**241**

Sections | Details

Detail at bottom

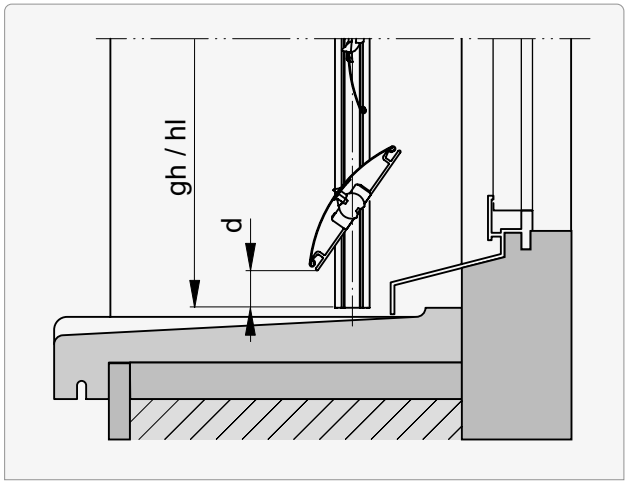

d (d - dimension)
min. 10 +5/–3

d - dimension may vary with different blind dimensions.

Sections for crank drive (MBMA)

outside bk

Conventional

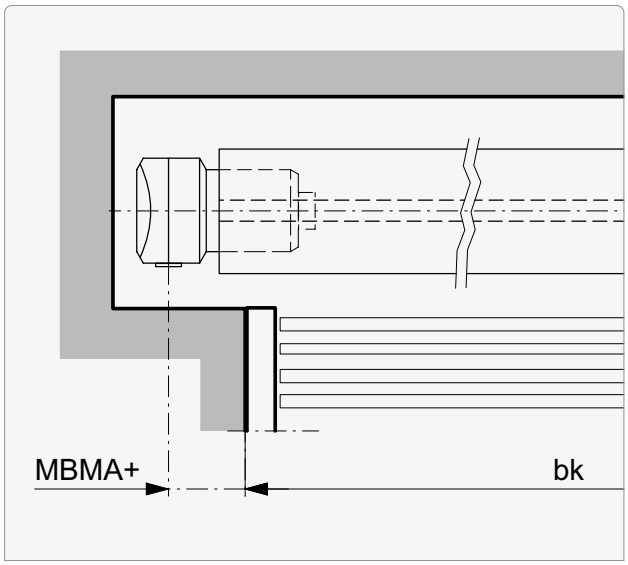

Self-supporting (Fix)

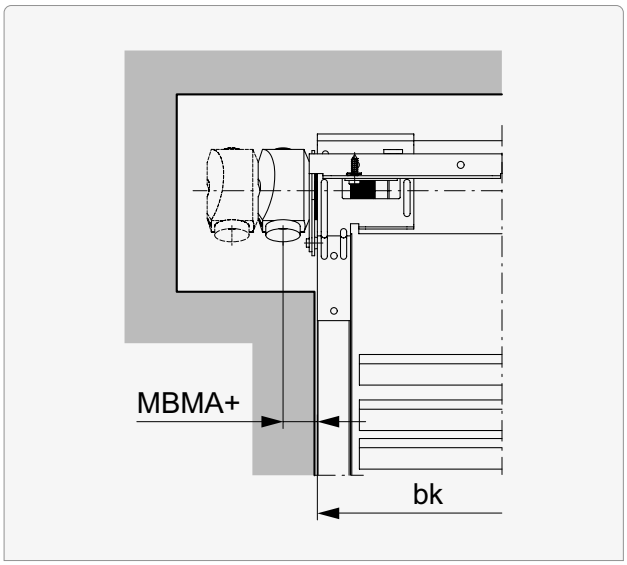

within bk

Conventional

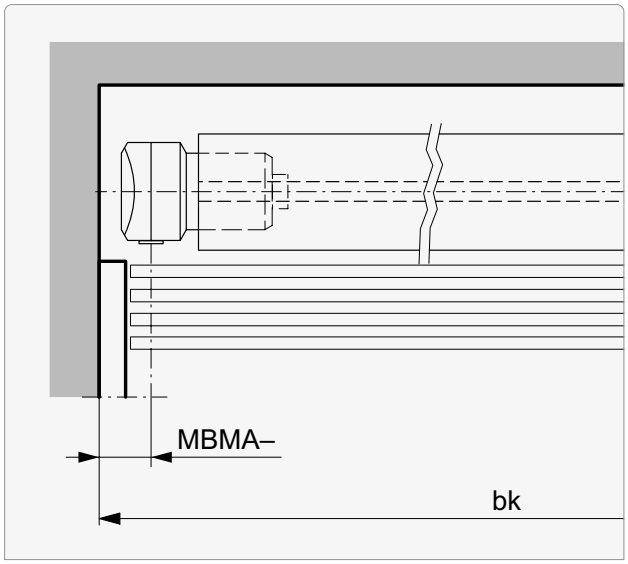

Self-supporting (Fix)

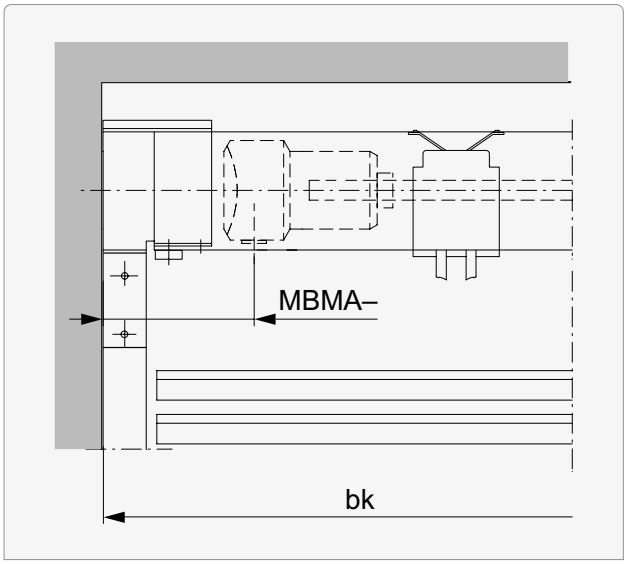

Version	MBMA+	MBMA–
Conventional	0 ... 999	0 ... (bk / 2)*
Self-supporting (Fix)	26 ... 125 (10 ... 25)[1]	90 ... (bk / 2)

[1] for reverse mounted gearbox

* ≤30: Gearbox niche required

Vertical connections | Standard motor position

Number of bearings

Solomatic® II 70

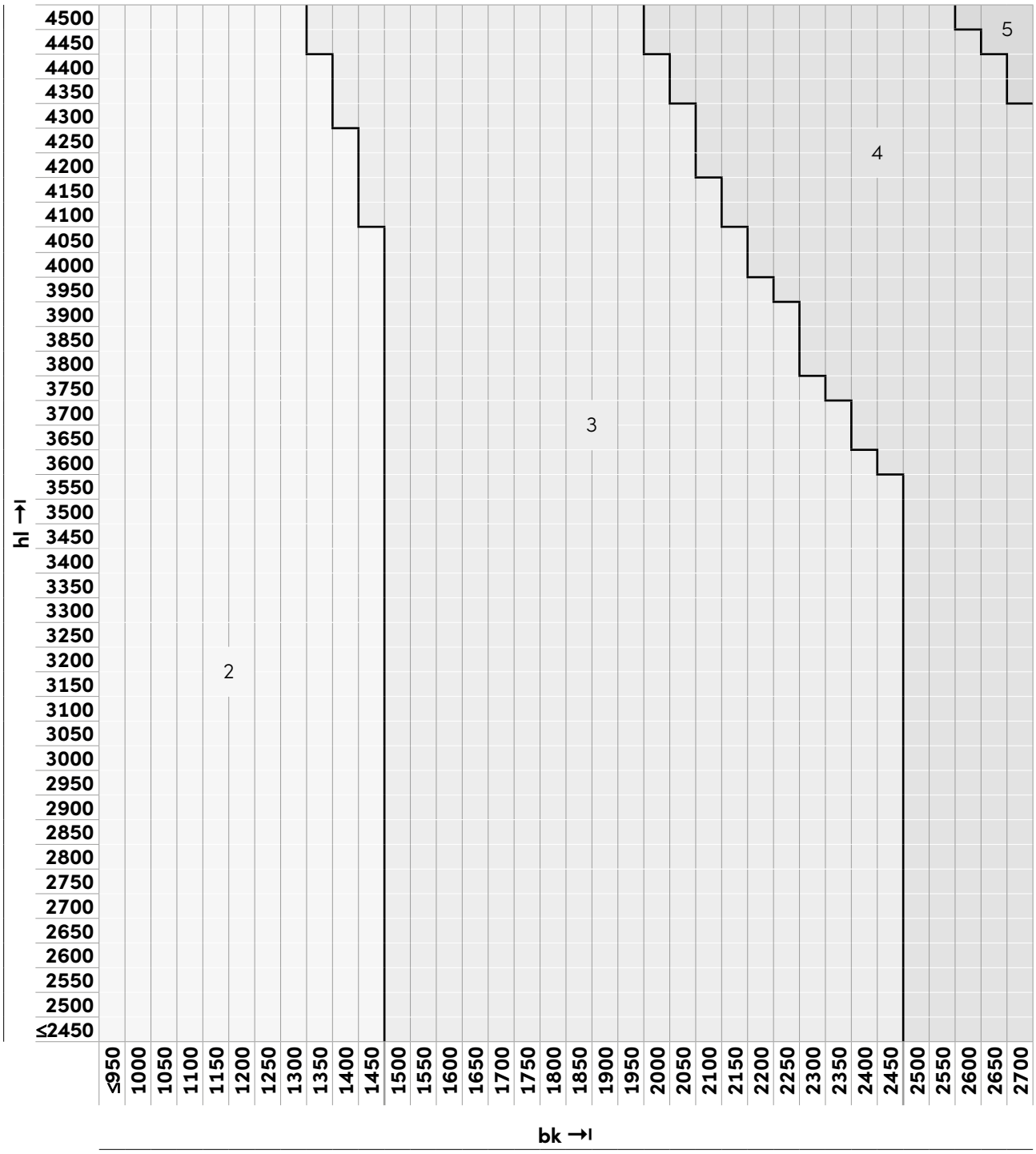

Standard motor position 259

Vertical connections | Standard motor position

Number of bearings

Solomatic® II 70

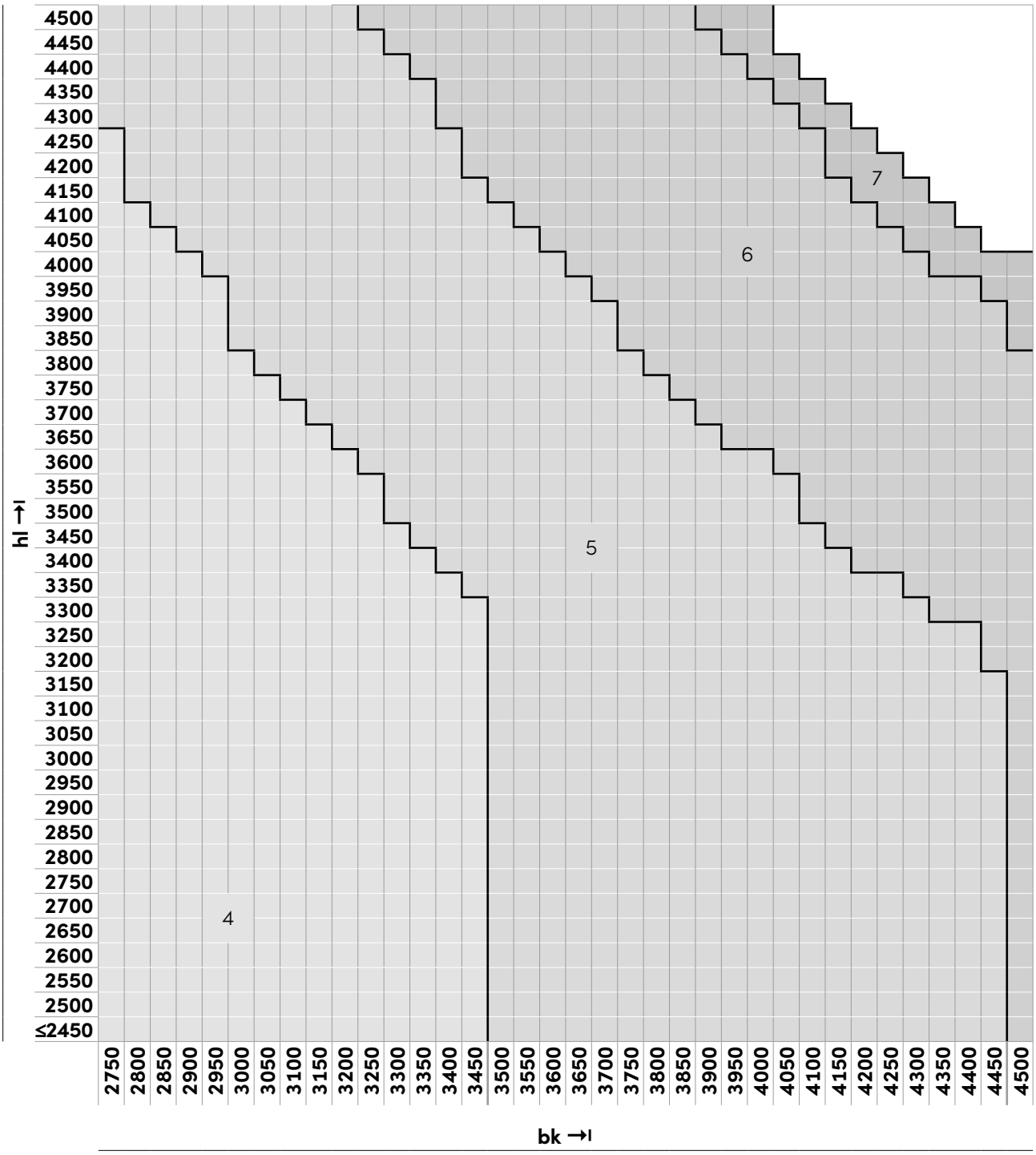

Vertical connections | Standard motor position

Number of bearings

Solomatic® II 80

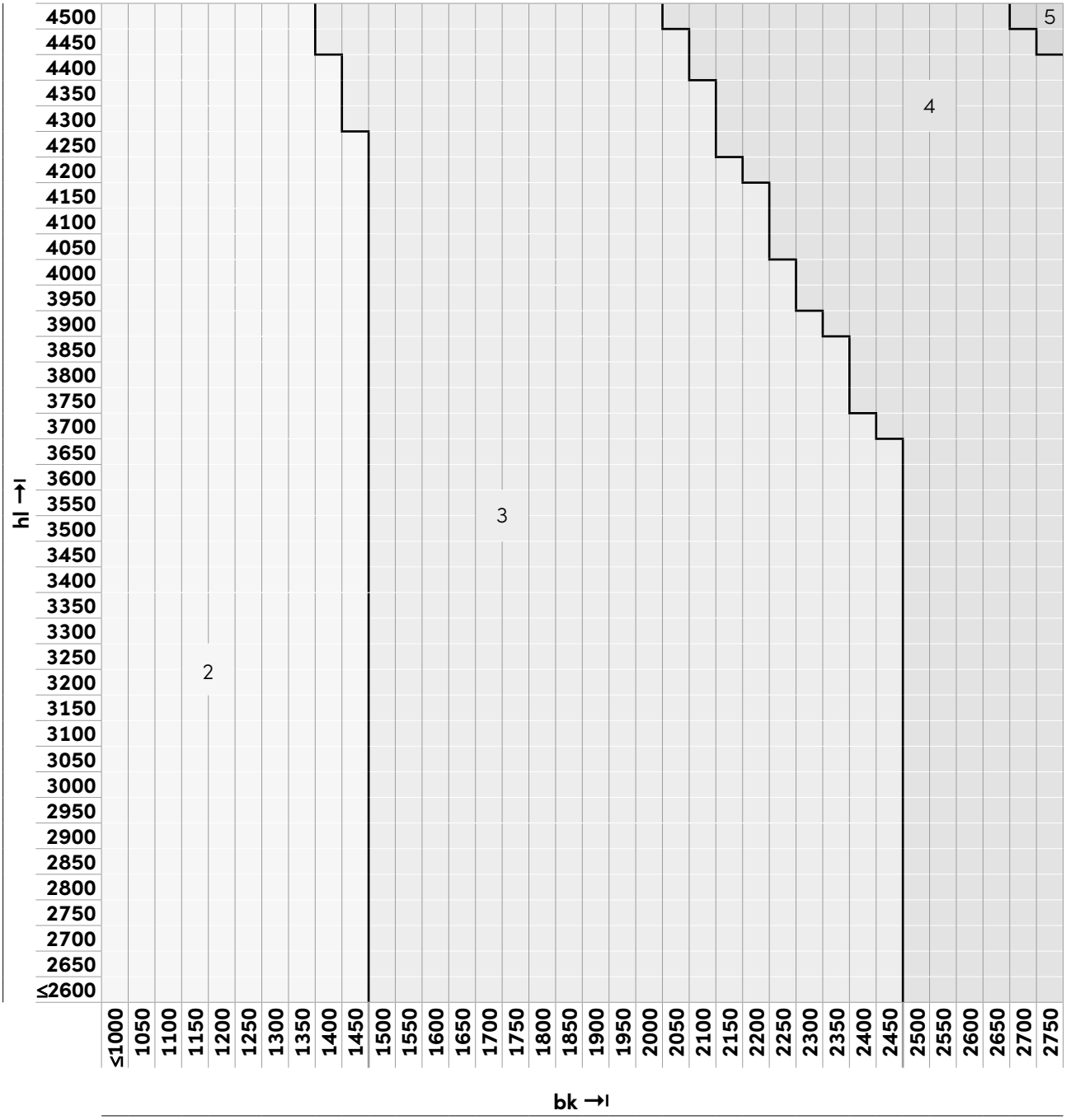

Standard motor position 259

Vertical connections | Standard motor position

Number of bearings

Solomatic® II 80



Vertical connections | Standard motor position

Standard motor position

Number of bearings	Standard motor position
2	
3	
4	
5	
6	
7	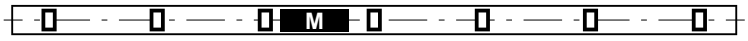

Bearing
M Standard motor position
M Possible motor position (on request)

Guide rail installation (principle)

Guides attached (to soffit) | Type A

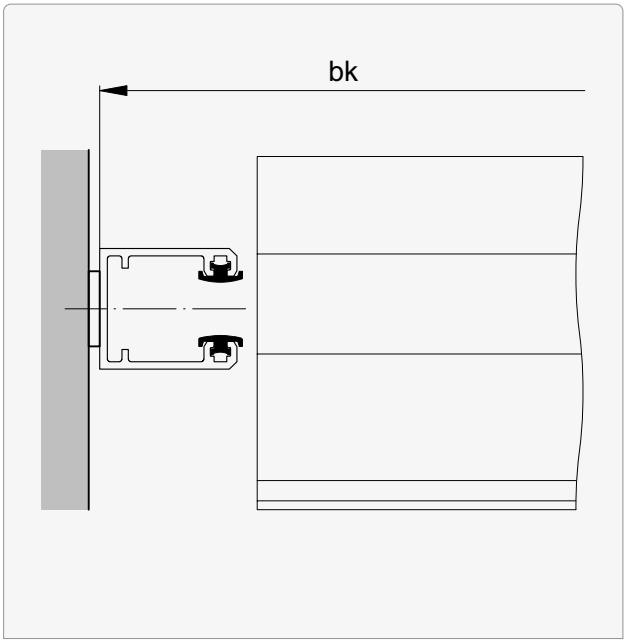

Guides suspended

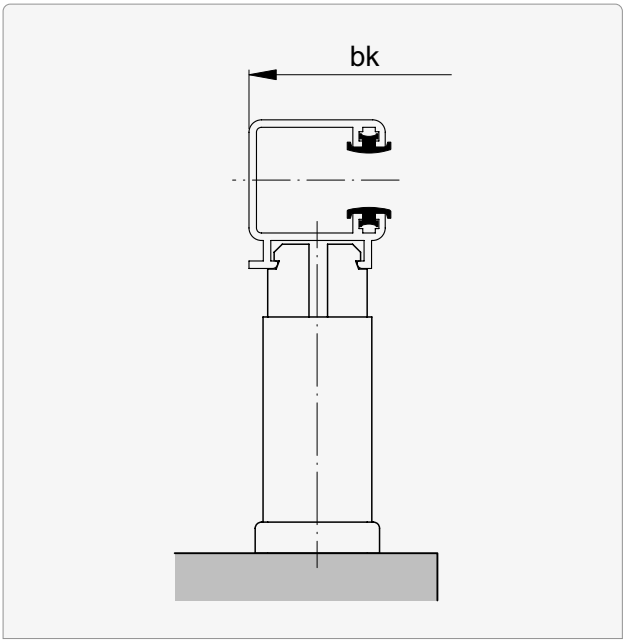

Observe possible guide rail spacer for **bk**.
Standard: 2 mm

Guide rail installation (principle)

Guides recessed

***Type F | Without guide cut-out:**
Only possible if curtain can be retracted from below.

Type E | F* | L

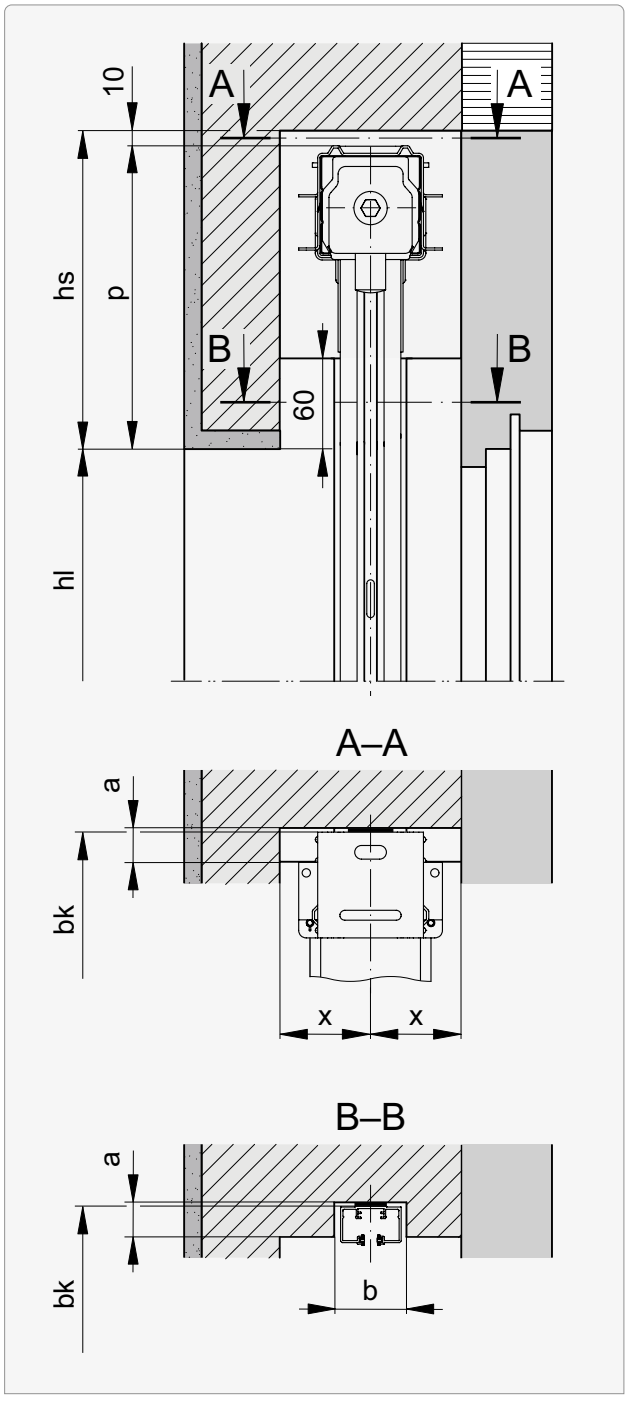

Type E

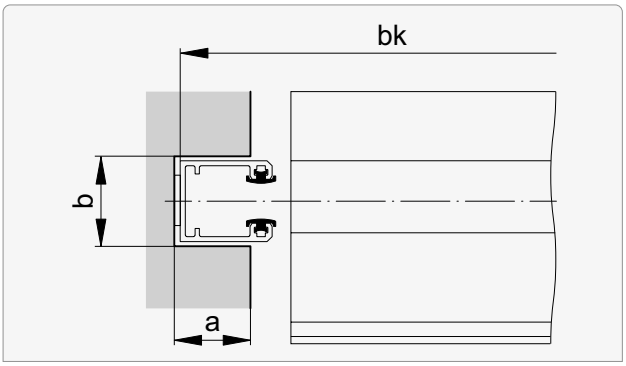

Type F*

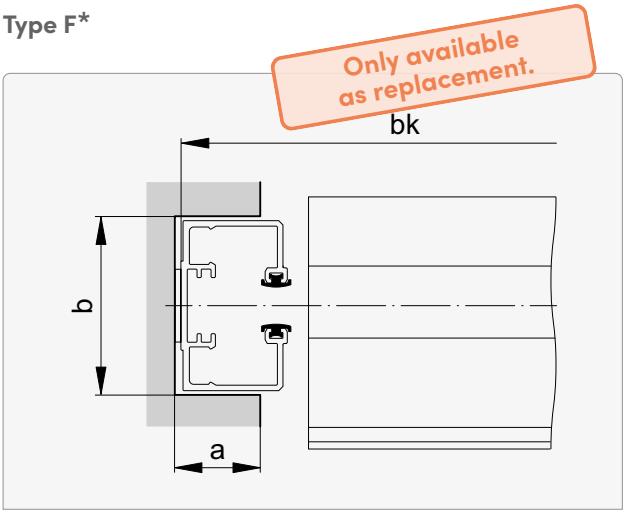

Type L

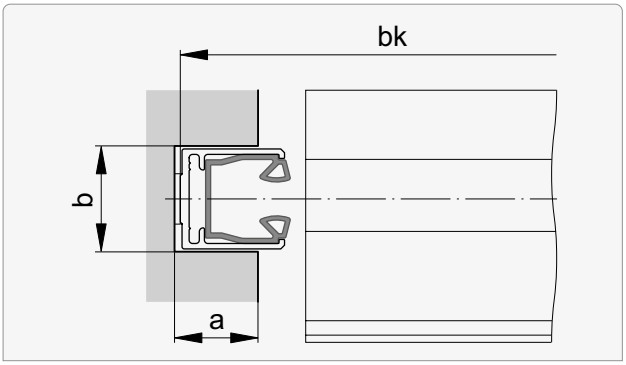

Product | Version	x min.
Solomatic® II 70 Fix	50
Solomatic® II 80 Fix	60

Type	a	b
E	≤18	≥21
F*	≤20	≥42
L	≤24	≥25

Guide rail fastenings (principle)

Overview

Type														
A	B	Bd	C	Cd	E	F	G	H	Kv	M	T	Tv	V	Wv
●	●	●	●	●	●	●	–	–	○[1]	○[2]	●	●	●	●

● applicable without restrictions

○ applicable with restrictions:
[1] only with guide **type C | T | R**
[2] only with guide **type E**

A Soffit installation

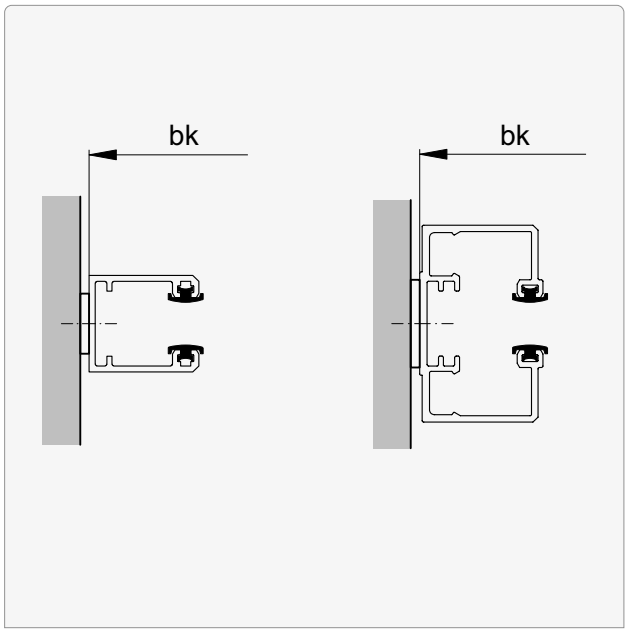

Transverse and holding force per fastening point at least 1000 N.

Observe possible guide rail spacer for **bk**.
Standard: 2 mm

Guide rail fastenings (principle)

B Installation with fastening bracket

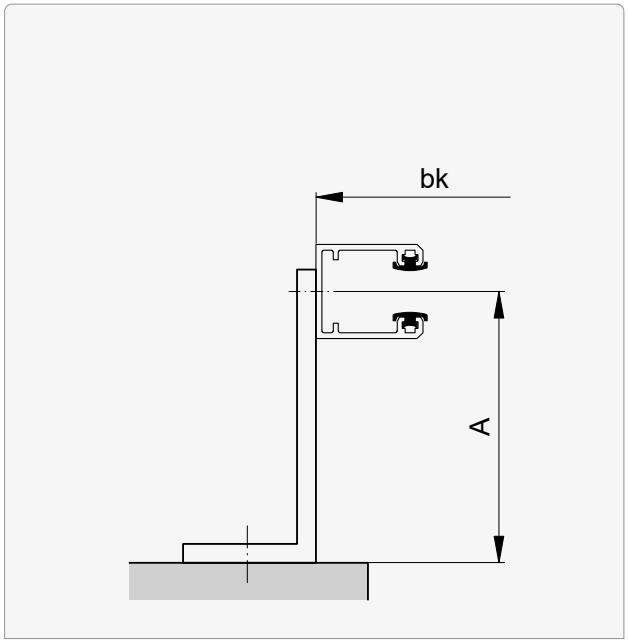

Bracket outwards

C Installation with fastening bracket

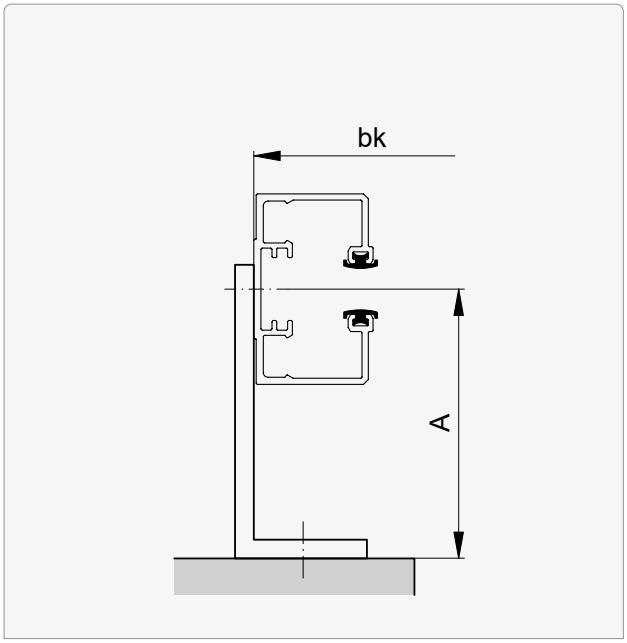

Bracket inwards

Fastening bracket for types B and C

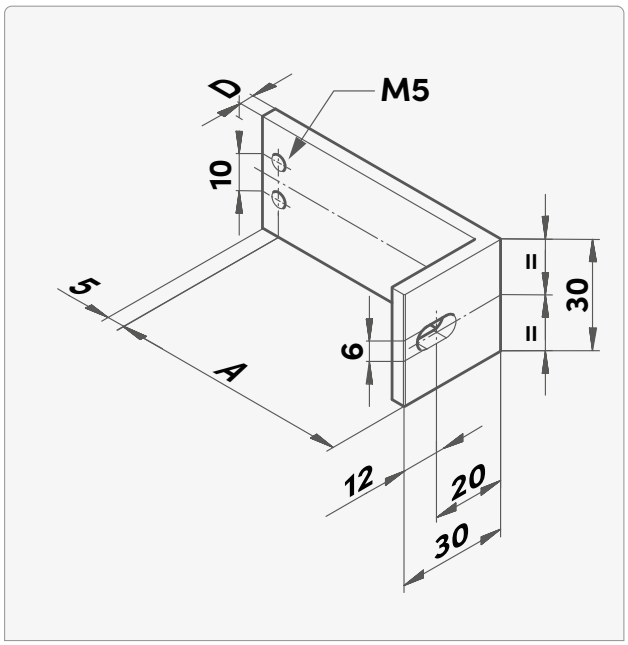

A*	D
20 ... 115	4

For suspended guide rails always with **brackets 70 mm**.

Transverse force at least 300 N and holding force:

A*	bk < 1.5 m	bk < 2.5 m	bk < 3.5 m	bk < 4.5 m
0 ... 45	300 N	350 N	350 N	300 N
46 ... 115	600 N	900 N	900 N	550 N
116 ... 215	1100 N	1600 N	1700 N	1000 N

* in 5 mm steps

Guide rail fastenings (principle)

Fastening bracket 70 mm for types B and C

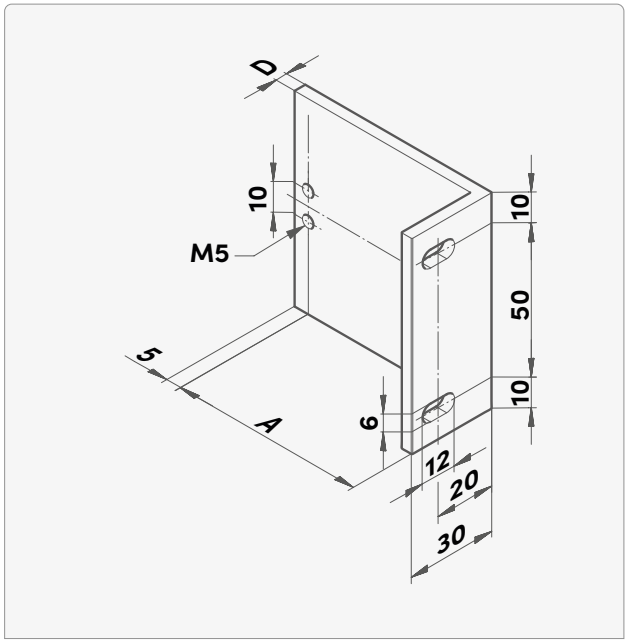

A*	D
20 ... 115	4
120 ... 215	5

Transverse force at least 1000 N and holding force at least 5300 N per fastening point.

If the **projection is ≥120**, all products are fastened with a **70 mm bracket**.

* in 5 mm steps

Guide rail fastenings (principle)

Bd Installation with continuous fastening bracket

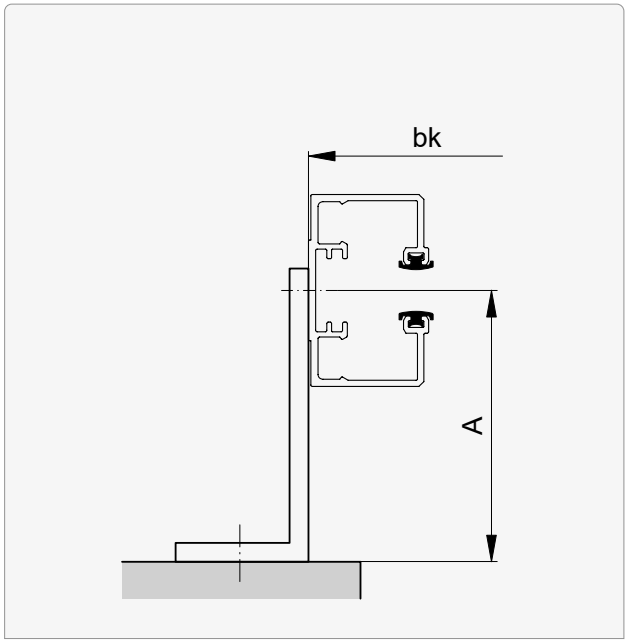

Bracket outwards

Cd Installation with continuous fastening bracket

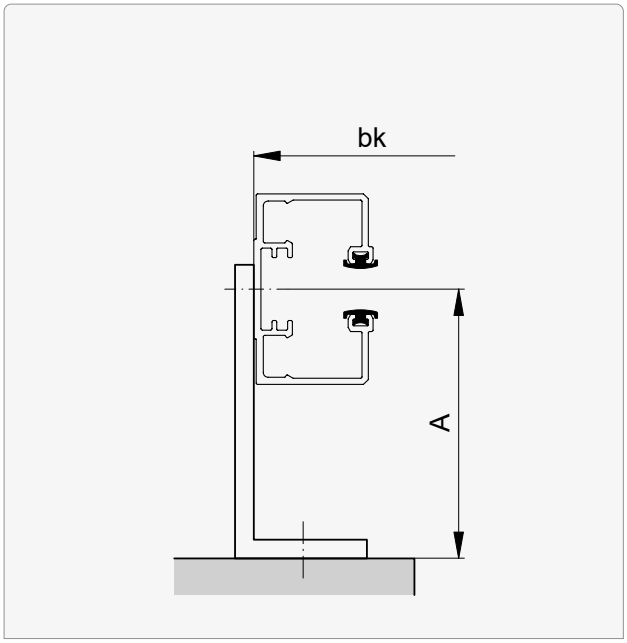

Bracket inwards

Continuous fastening bracket for types Bd and Cd

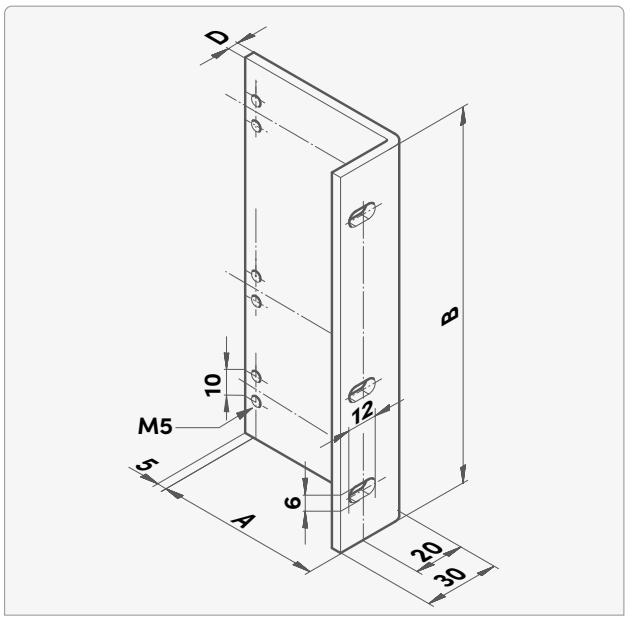

A*	D
20 ... 300	always 4

Transverse force at least 300 N and holding force:

A*	bk < 1.5 m	bk < 2.5 m	bk < 3.5 m	bk < 4.5 m
0 ... 45	300 N	350 N	350 N	300 N
46 ... 115	600 N	900 N	900 N	550 N
116 ... 215	1100 N	1600 N	1800 N	1000 N
216 ... 300	1600 N	2300 N	2400 N	1400 N

* in 5 mm steps

Guide rail fastenings (principle)

E | F Installation with fastening lug

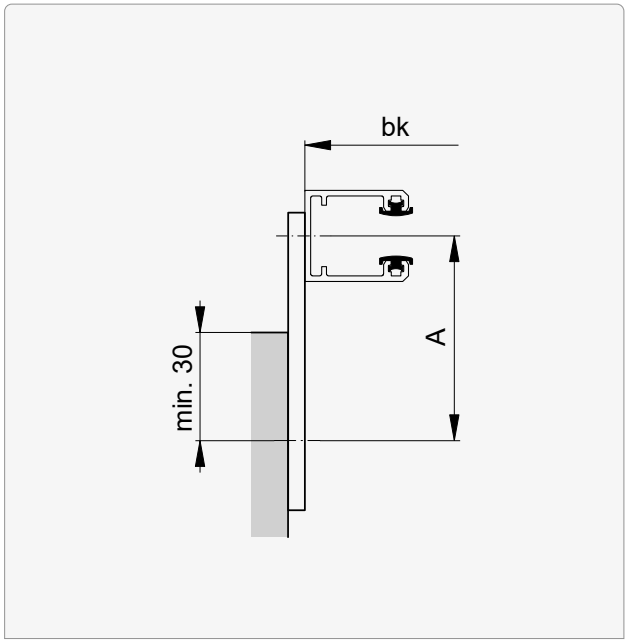

inwards / outwards

Kv Installation with adjustable console

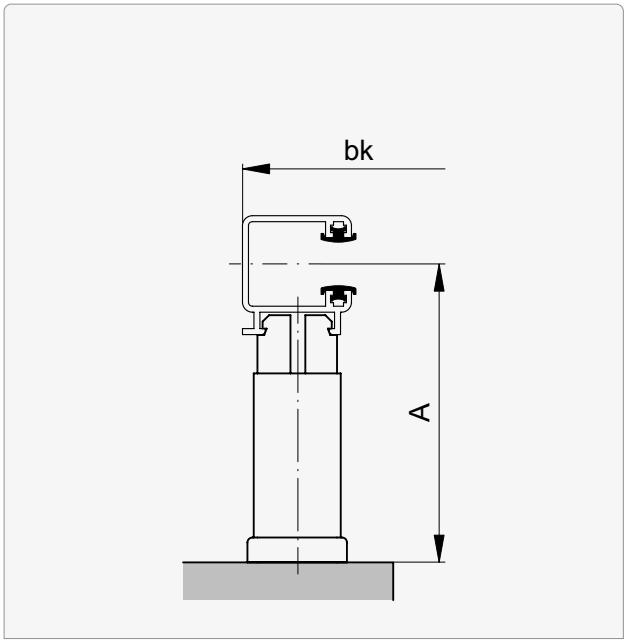

Only with guide type C|T|R

Fastening lug for type E | F

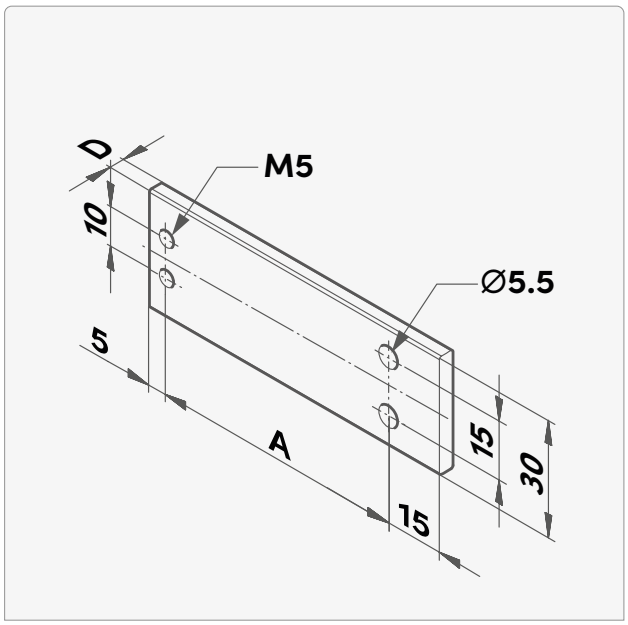

A*
50 ... 115
120 ... 125

D
4
5

Transverse force at least 500 N and holding force at least 1000 N per fastening point.

* in 5 mm steps

Console for type Kv

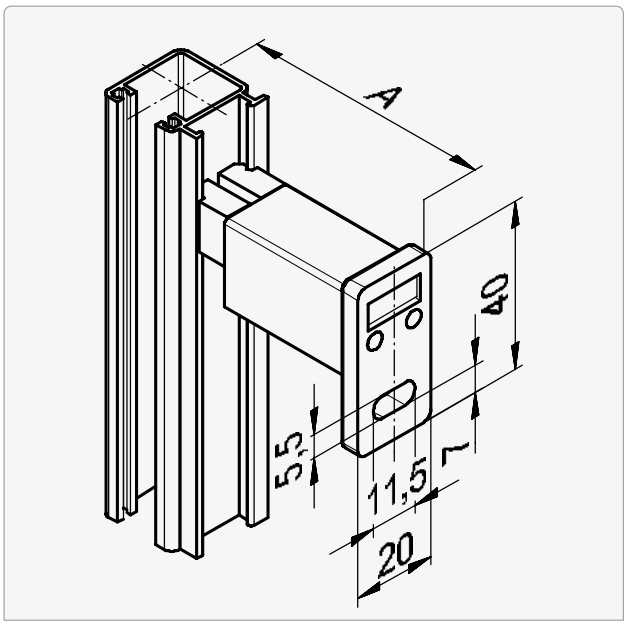

A
60 ... 75
76 ... 90
91 ... 105
106 ... 120

A
121 ... 135
136 ... 150
151 ... 165
166 ... 180
181 ... 195

Transverse force at least 500 N and holding force at least 1250 N per fastening point.

Guide rail fastenings (principle)

M Installation with centre bracket

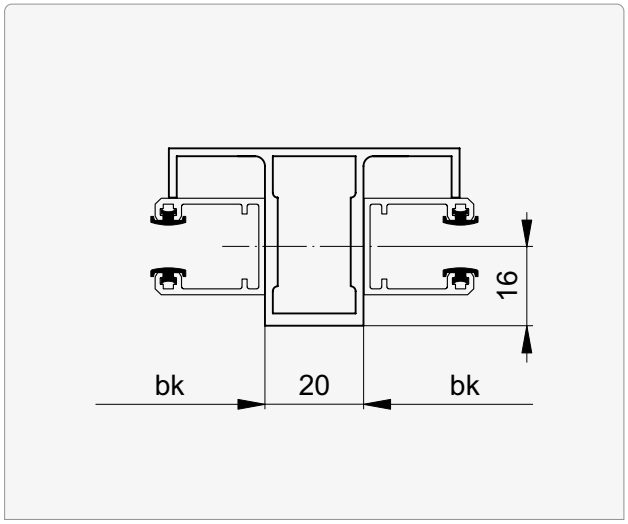

Only with guide type E
Length = Guide length

Principle

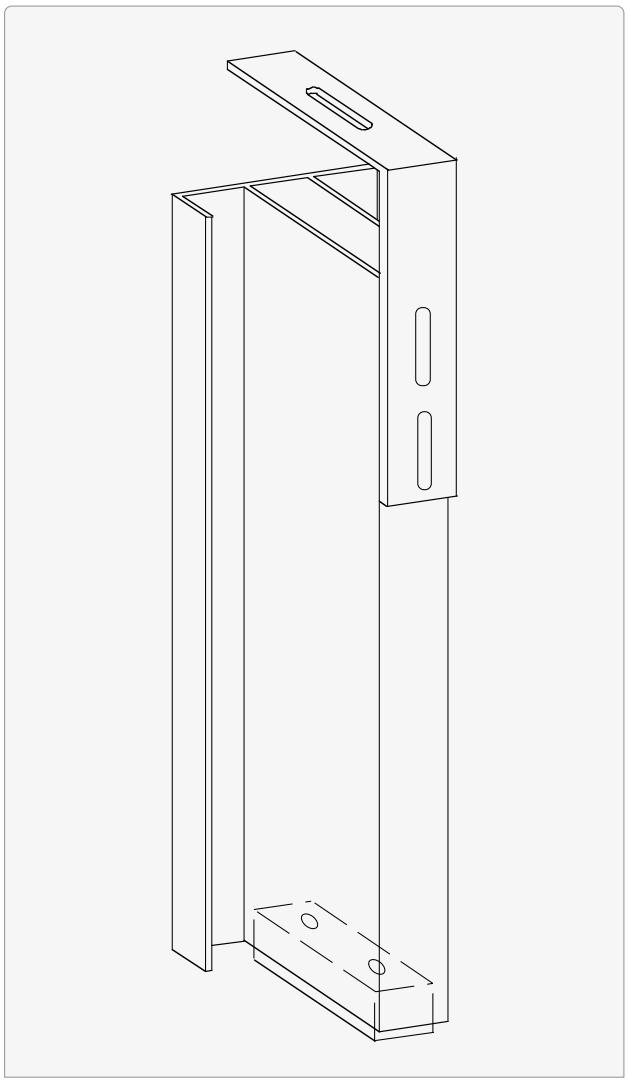

Fastening bracket above centre bracket

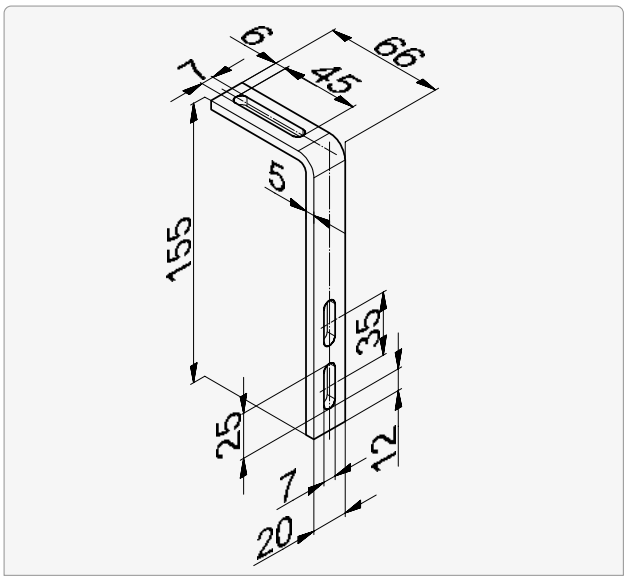

Transverse force at least 1000 N and holding force at least 4000 N per fastening point.

Fastening square below for centre bracket

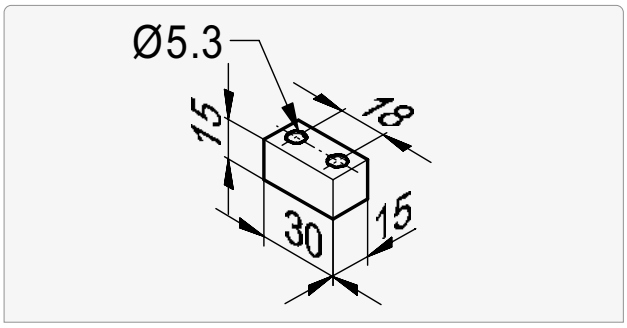

Guide rail fastenings (principle)

T Installation with T-bracket

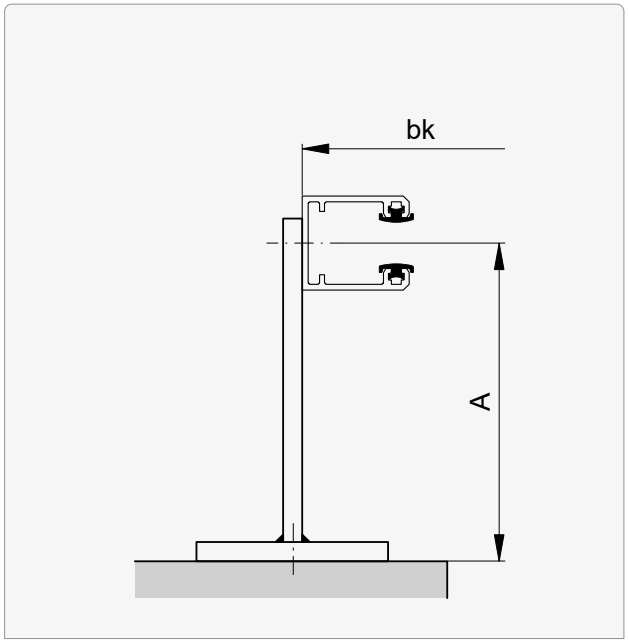

Tv Installation with adjustable T-bracket

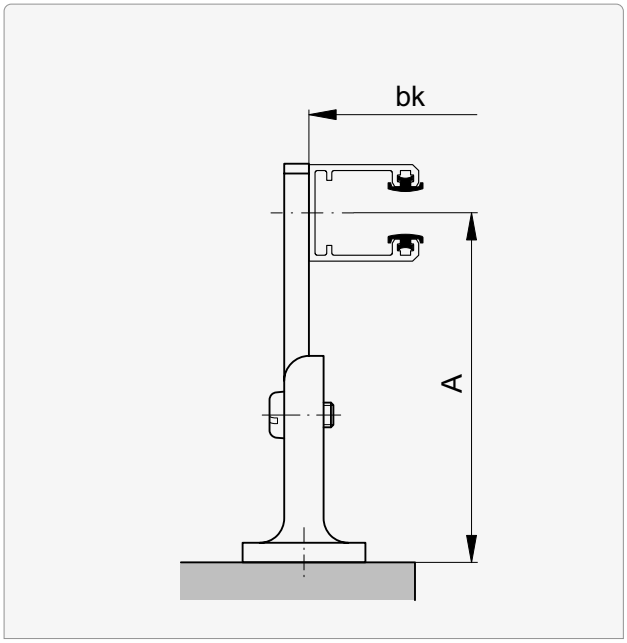

T-bracket for type T

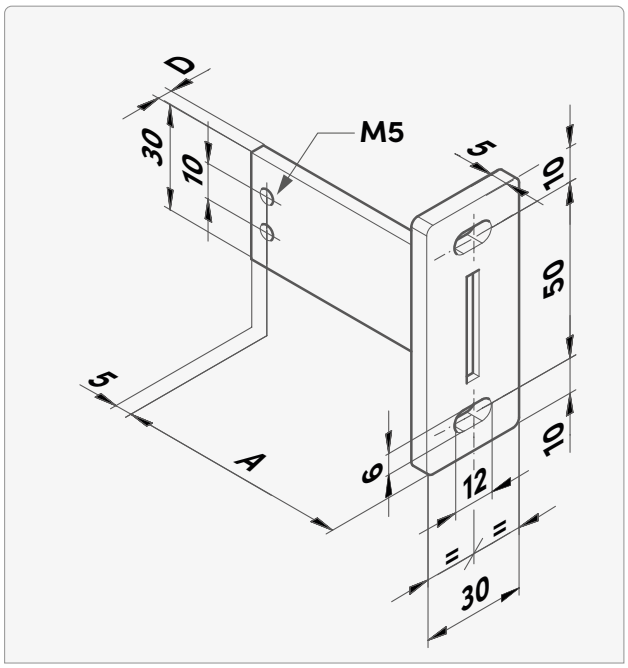

A	D
20 ... 115*	4
120 ... 215*	5

Transverse force at least 1000 N and holding force at least 1500 N per fastening point.

* in 5 mm steps

T-bracket adjustable for type Tv

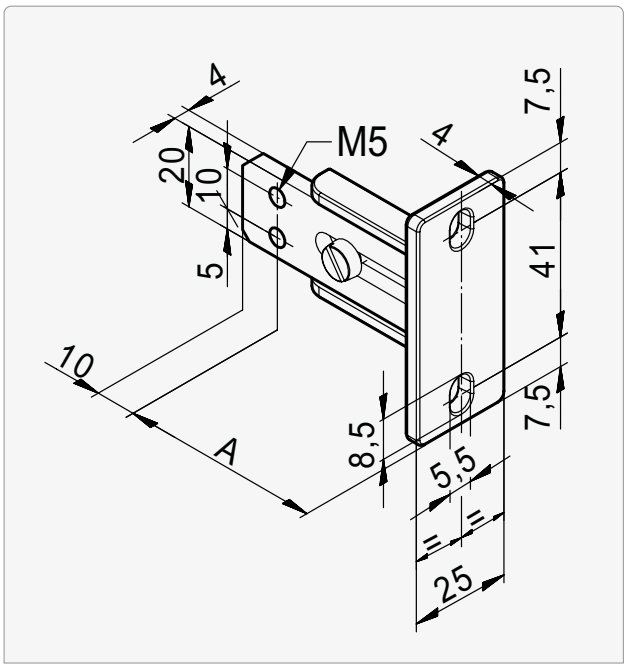

A
50 ... 68
69 ... 87
88 ... 106
107 ... 115

Transverse force at least 1000 N and holding force at least 4000 N per fastening point.

Guide rail fastenings (principle)

T Installation with one bracket

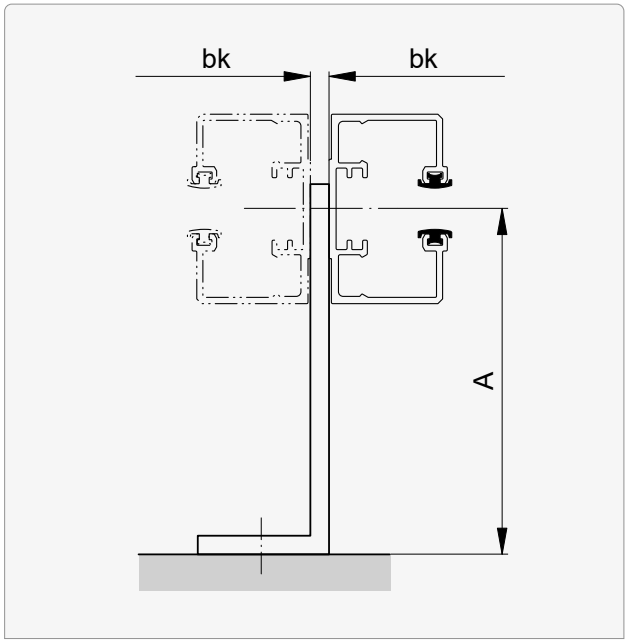

The blind on the right uses the fastening for the blind on the left.

Transverse and holding force per fastening point at least 1000 N.

Wv Installation with adjustable bracket

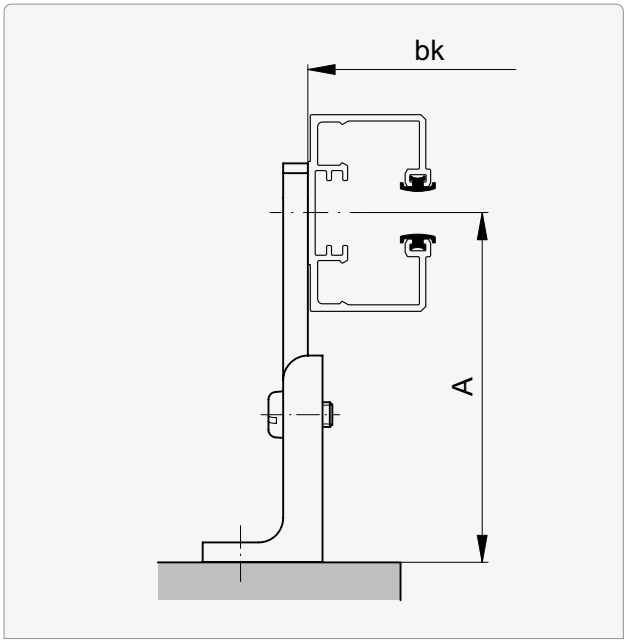

W-bracket adjustable for type Wv

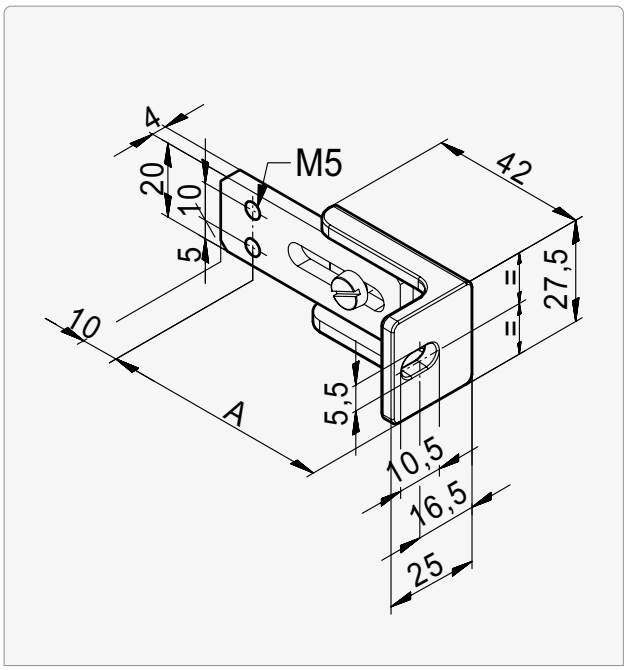

A
50 ... 68
69 ... 87
88 ... 106
107 ... 115

Transverse force at least 1000 N and holding force at least 2200 N per fastening point.

Guide extension and facet

Extension

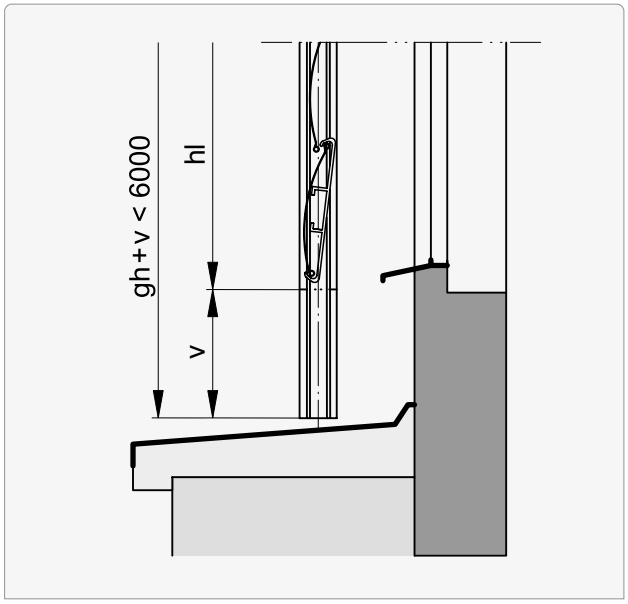

v
–20 ... 3000

Facet

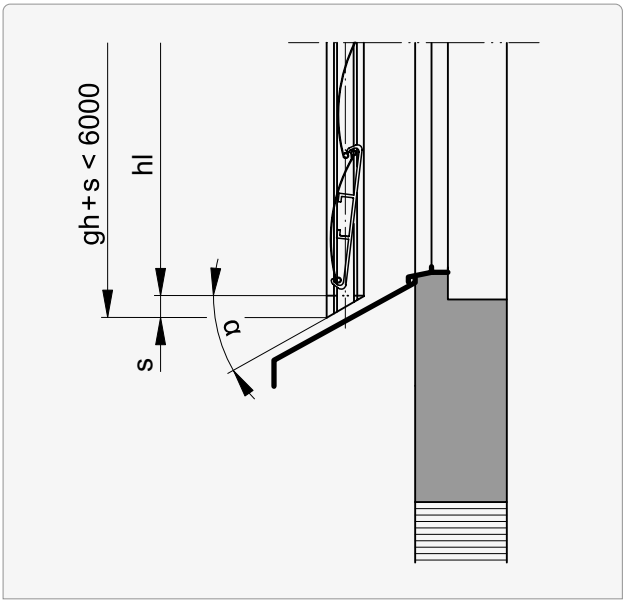

α
5 ... 50°

Extension and facet

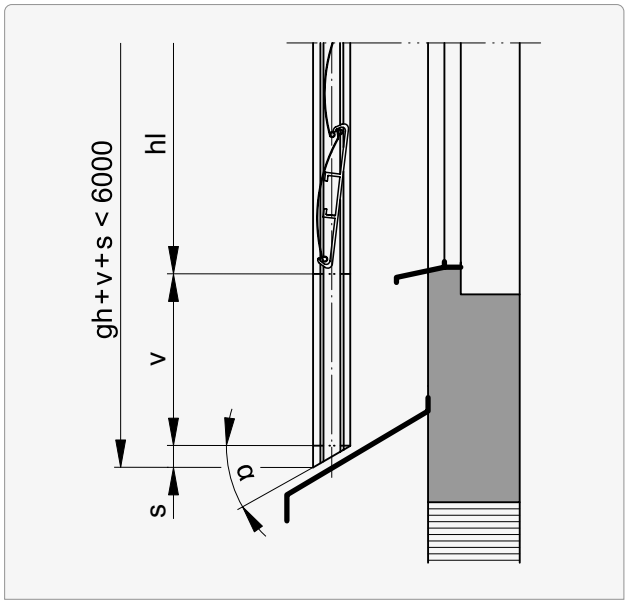

v	α
0 ... 3000	5 ... 50°

Value for **s** **271**

Angling at the guides

Type E | Single guide

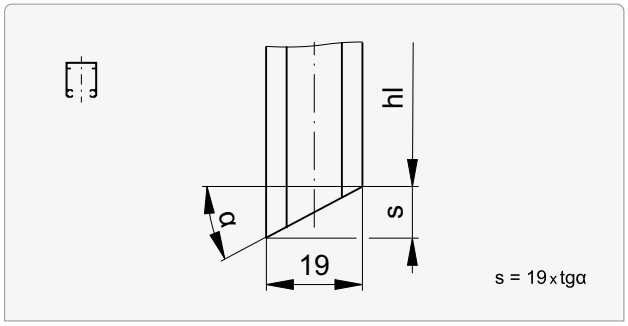

α	s	α	s	α	s	α	s	α	s
5	2	**15**	5	**25**	9	**35**	13	**45**	19
6	2	**16**	5	**26**	9	**36**	14	**46**	20
7	2	**17**	6	**27**	10	**37**	14	**47**	20
8	3	**18**	6	**28**	10	**38**	15	**48**	21
9	3	**19**	7	**29**	11	**39**	15	**49**	22
10	3	**20**	7	**30**	11	**40**	16	**50**	23
11	4	**21**	7	**31**	11	**41**	17		
12	4	**22**	8	**32**	12	**42**	17		
13	4	**23**	8	**33**	12	**43**	18		
14	5	**24**	8	**34**	13	**44**	18		

Type C | Single guide

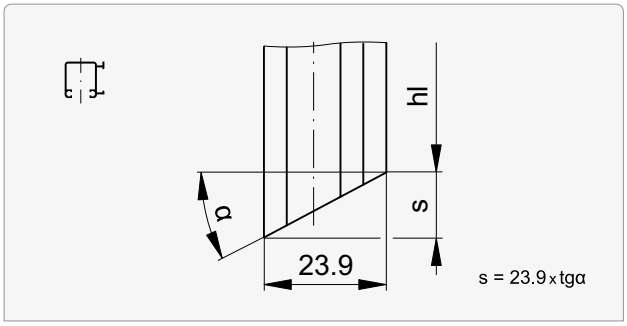

α	s	α	s	α	s	α	s	α	s
5	2	**15**	6	**25**	11	**35**	17	**45**	24
6	3	**16**	7	**26**	12	**36**	17	**46**	25
7	3	**17**	7	**27**	12	**37**	18	**47**	26
8	3	**18**	8	**28**	13	**38**	19	**48**	27
9	4	**19**	8	**29**	13	**39**	19	**49**	27
10	4	**20**	9	**30**	14	**40**	20	**50**	28
11	5	**21**	9	**31**	14	**41**	21		
12	5	**22**	10	**32**	15	**42**	22		
13	6	**23**	10	**33**	16	**43**	22		
14	6	**24**	11	**34**	16	**44**	23		

Type L | Fix guide

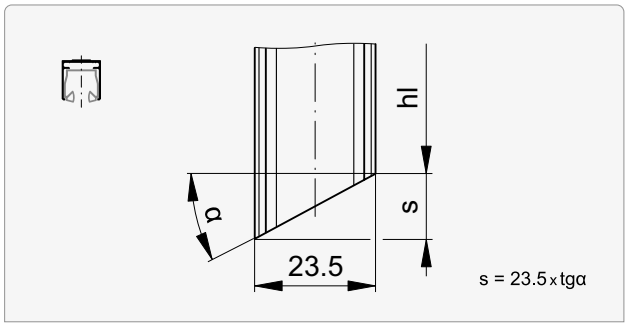

α	s	α	s	α	s	α	s	α	s
5	2	**15**	6	**25**	11	**35**	16	**45**	24
6	2	**16**	7	**26**	11	**36**	17	**46**	24
7	3	**17**	7	**27**	12	**37**	18	**47**	25
8	3	**18**	8	**28**	12	**38**	18	**48**	26
9	4	**19**	8	**29**	13	**39**	19	**49**	27
10	4	**20**	9	**30**	14	**40**	20	**50**	28
11	5	**21**	9	**31**	14	**41**	20		
12	5	**22**	9	**32**	15	**42**	21		
13	5	**23**	10	**33**	15	**43**	22		
14	6	**24**	10	**34**	16	**44**	23		

Type F | Fix guide

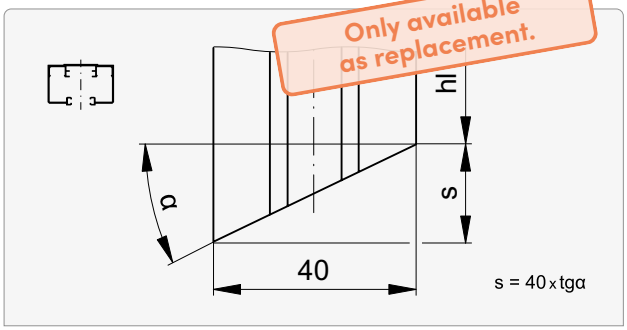

α	s	α	s	α	s	α	s	α	s
5	3	**15**	11	**25**	19	**35**	28	**45**	40
6	4	**16**	11	**26**	20	**36**	29	**46**	41
7	5	**17**	12	**27**	20	**37**	30	**47**	43
8	6	**18**	13	**28**	21	**38**	31	**48**	44
9	6	**19**	14	**29**	22	**39**	32	**49**	46
10	7	**20**	15	**30**	23	**40**	34	**50**	48
11	8	**21**	15	**31**	24	**41**	35		
12	9	**22**	16	**32**	25	**42**	36		
13	9	**23**	17	**33**	26	**43**	37		
14	10	**24**	18	**34**	27	**44**	39		

Angling at the guides

Type T | Double guide

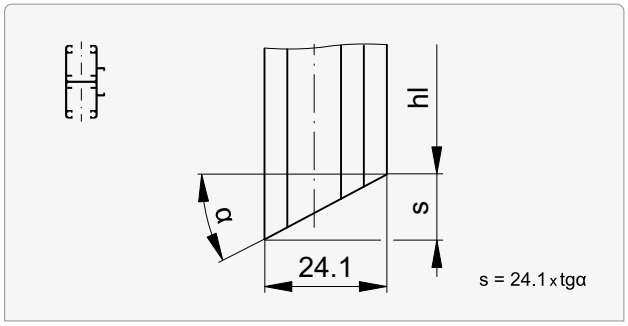

α	s	α	s	α	s	α	s	α	s
5	2	**15**	6	**25**	11	**35**	17	**45**	24
6	3	**16**	7	**26**	12	**36**	18	**46**	25
7	3	**17**	7	**27**	12	**37**	18	**47**	26
8	3	**18**	8	**28**	13	**38**	19	**48**	27
9	4	**19**	8	**29**	13	**39**	20	**49**	28
10	4	**20**	9	**30**	14	**40**	20	**50**	29
11	5	**21**	9	**31**	14	**41**	21		
12	5	**22**	10	**32**	15	**42**	22		
13	6	**23**	10	**33**	16	**43**	22		
14	6	**24**	11	**34**	16	**44**	23		

Type D | Double guide

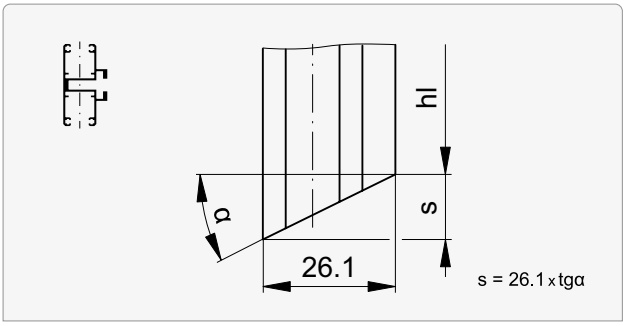

α	s	α	s	α	s	α	s	α	s
5	2	**15**	7	**25**	12	**35**	18	**45**	26
6	3	**16**	7	**26**	13	**36**	19	**46**	27
7	3	**17**	8	**27**	13	**37**	20	**47**	28
8	4	**18**	8	**28**	14	**38**	20	**48**	29
9	4	**19**	9	**29**	14	**39**	21	**49**	30
10	5	**20**	9	**30**	15	**40**	22	**50**	31
11	5	**21**	10	**31**	16	**41**	23		
12	6	**22**	11	**32**	16	**42**	24		
13	6	**23**	11	**33**	17	**43**	24		
14	7	**24**	12	**34**	18	**44**	25		

Type R | Curved double guide

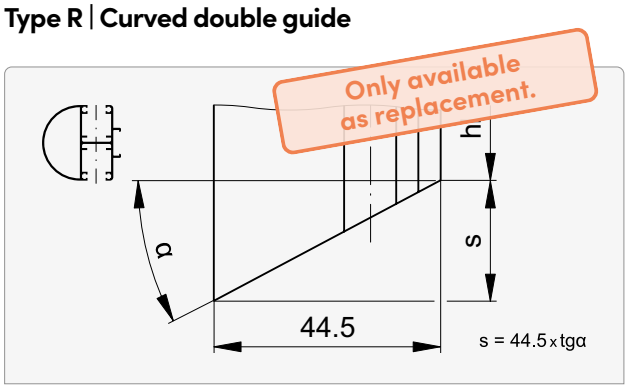

α	s	α	s	α	s	α	s	α	s
5	4	**15**	12	**25**	21	**35**	31	**45**	45
6	5	**16**	13	**26**	22	**36**	32	**46**	46
7	5	**17**	14	**27**	23	**37**	34	**47**	48
8	6	**18**	14	**28**	24	**38**	35	**48**	50
9	7	**19**	15	**29**	25	**39**	36	**49**	51
10	8	**20**	16	**30**	26	**40**	37	**50**	53
11	9	**21**	17	**31**	27	**41**	39		
12	9	**22**	18	**32**	28	**42**	40		
13	10	**23**	19	**33**	29	**43**	42		
14	11	**24**	20	**34**	30	**44**	43		

Guide rail cut-outs in windowsill area

Guide type						
C	D	E	F	L	R	T
–	–	●	●	●	–	–

Rear cut-out | without/with extension

Without extension

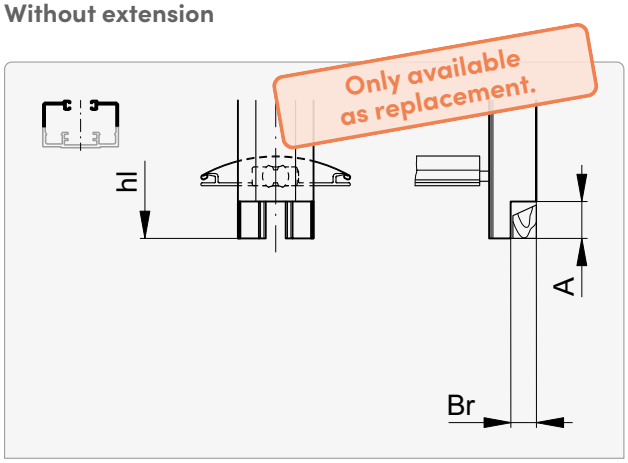

A	Br		
Guide type	E	F	L*
0 ... 25	2 ... 3	2 ... 4	2 ... 4
	5 ... 12	9 ... 12	6

*** FL ≥ 630**

Extension | v ≤ A

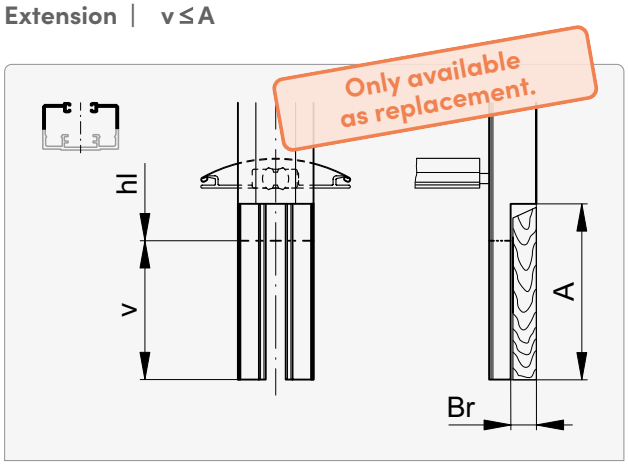

A	Br		
Guide type	E	F	L*
0 ... 25	2 ... 3	2 ... 4	2 ... 4
	5 ... 12	9 ... 12	6

*** FL ≥ 630**

Extension | v > A

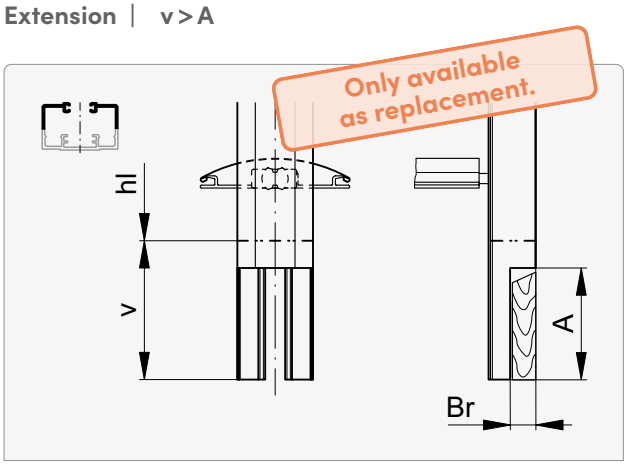

A	Br		
Guide type	E	F	L*
0 ... 25	2 ... 3	2 ... 4	2 ... 4
	5 ... 12	9 ... 12	6

*** FL ≥ 630**

v Guide rail extension: 0 ... 3000

Guide rail cut-outs in windowsill area

Inner cut-out | without / with extension

Without extension

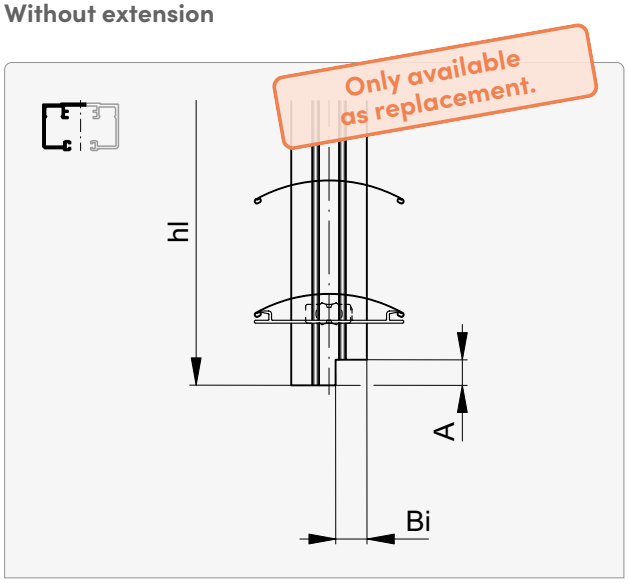

A	Bi		
Guide type	E	F	L*
0 ... 25	6 ... 12	3 ... 10	8 ... 12

*** FL ≥ 630**

Extension | v ≤ A

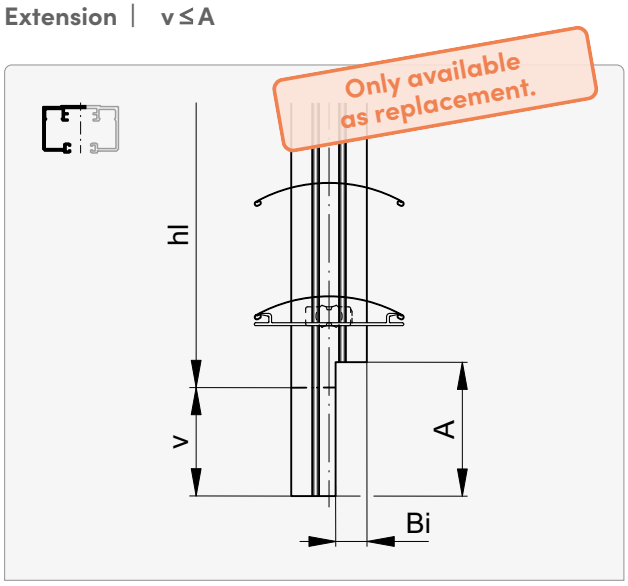

A	Bi		
Guide type	E	F	L*
0 ... 25	6 ... 12	3 ... 10	8 ... 12

*** FL ≥ 630**

Extension | v > A

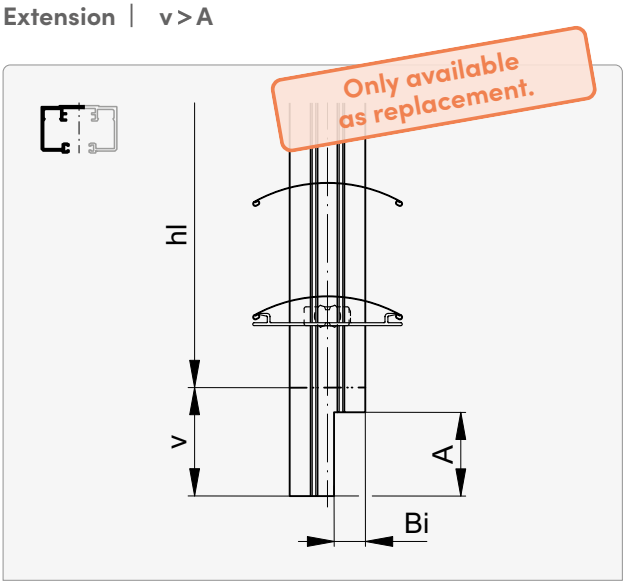

A	Bi		
Guide type	E	F	L*
0 ... 25	6 ... 12	3 ... 10	8 ... 12

*** FL ≥ 630**

v Guide rail extension: 0 ... 3000

Guide rail end for suspended guide rails

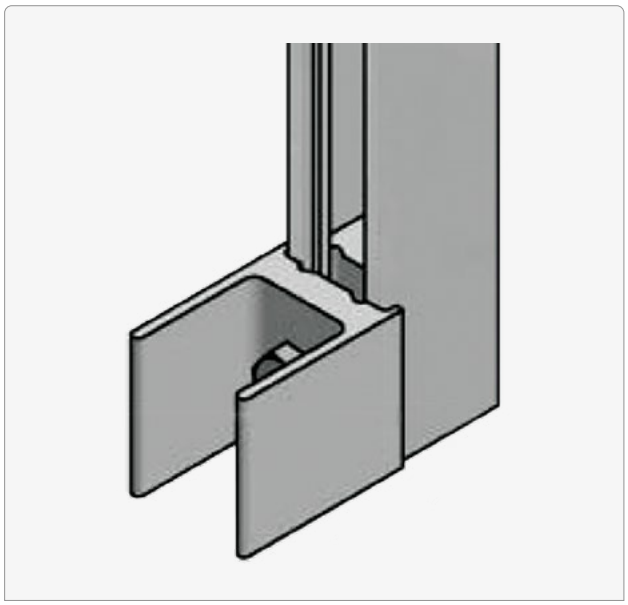

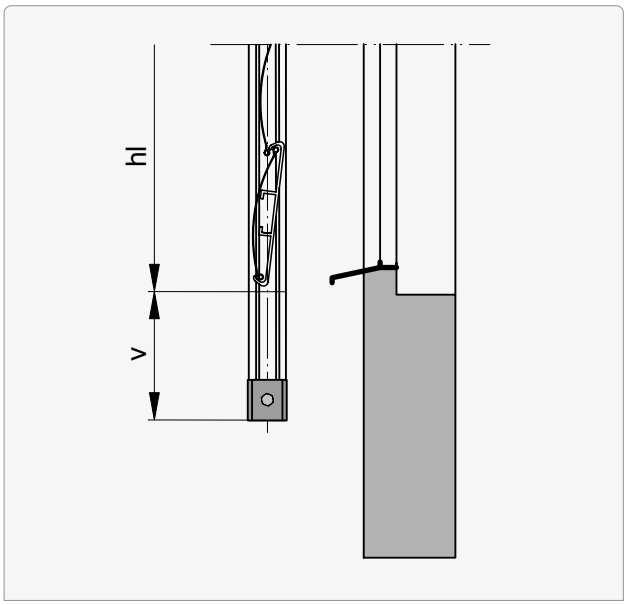

Guide type						
C	D	E	F	L	R	T
●	●	●	●	●	●	●

L*	v
70	≥30

* Guide fastening with local brackets.

Installation window

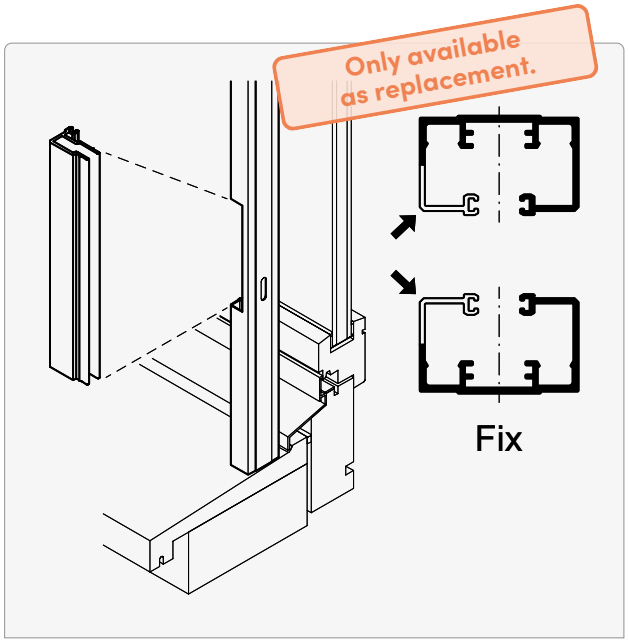

Without extension

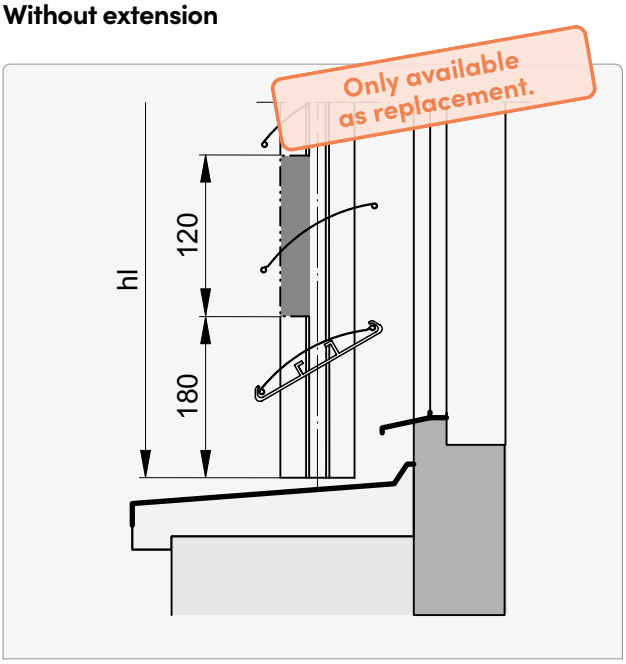

With extension

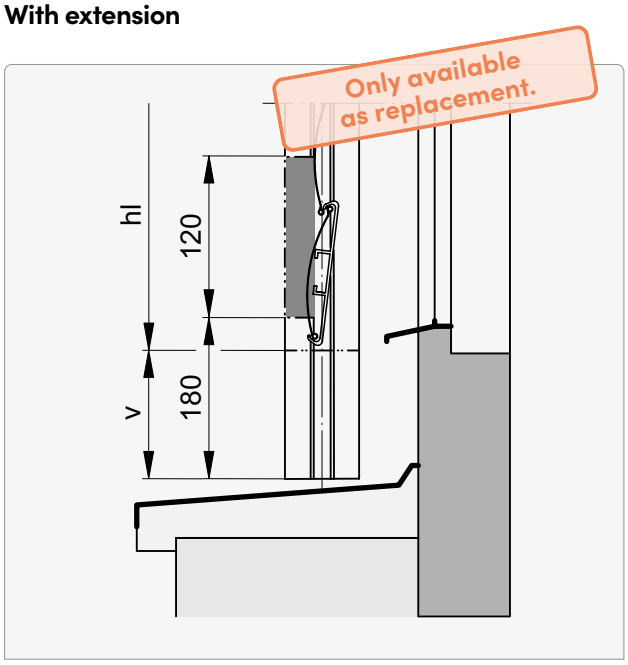

With extension and facet

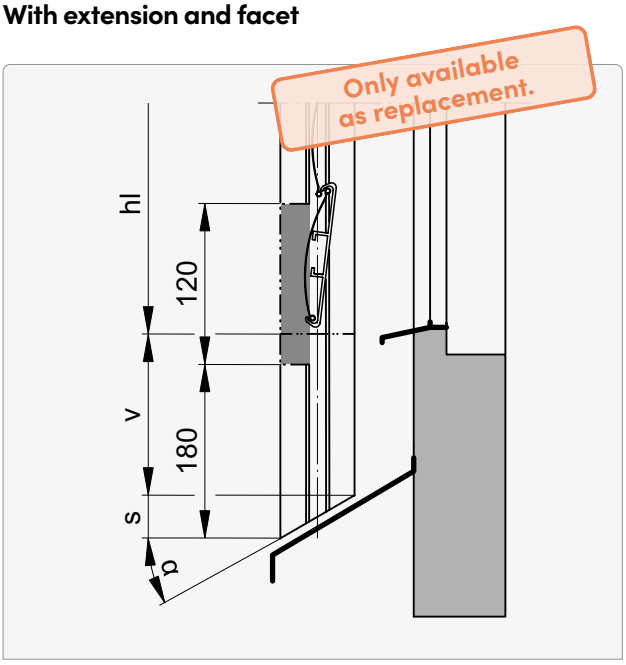

s Faceting (guide rail width x tgα)

v Guide rail extension: max. 3000

Fastening points

Box

Transverse and holding force per fastening point at least 700 N.

Without guide rail extension

hl	AS
≤ 1500	2
1501 ... 2700	3
2701 ... 3900	4
3901 ... 5100	5
> 5100	6

Regular

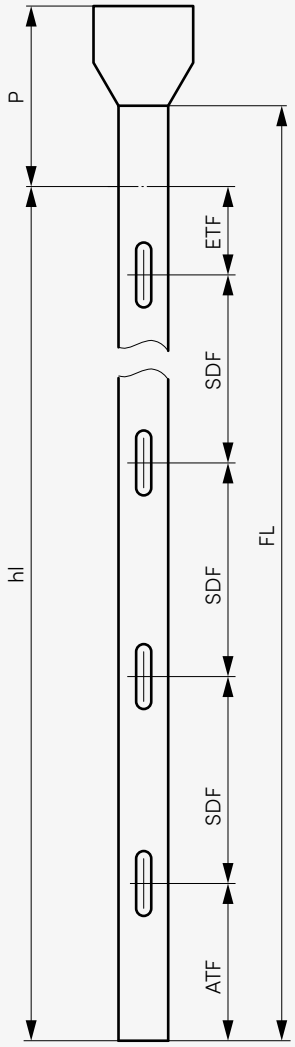

Irregular

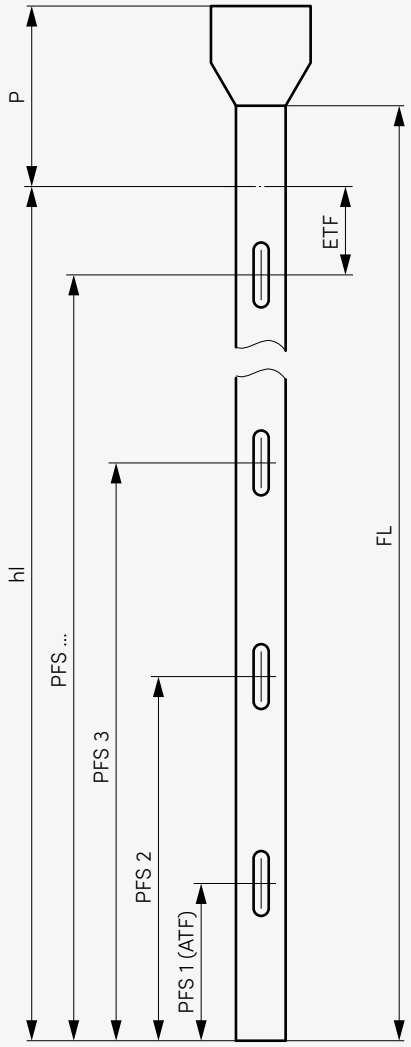

AS Number of slits
ATF Initial spacing guide rail (standard 200)
ETF Endspacing guide rail (standard 100)
FL Guide length
PFS Slot position
SDF Slot distance guide rail: 100 ... 1200

Guide rail fastenings 262
Installation window 276

Fastening points

Transverse and holding force per fastening point at least 700 N.

With guide rail extension

Z	AS
≤ 1500	2
1501 ... 2700	3
2701 ... 3900	4
3901 ... 5100	5
> 5100	6

Regular

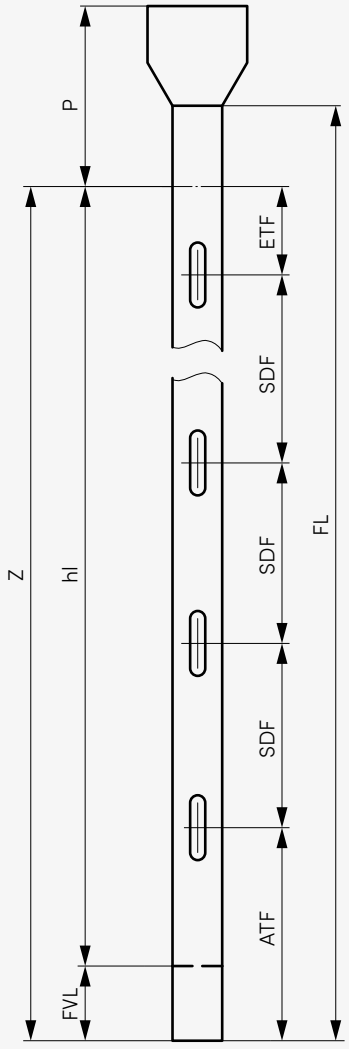

Irregular

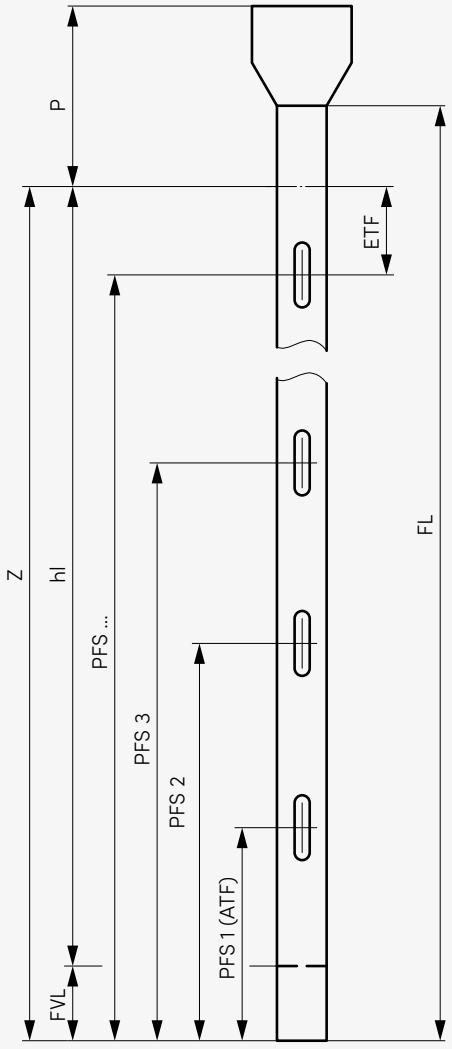

AS Number of slits
ATF Initial spacing guide rail (standard 200)
ETF Endspacing guide rail (standard 100)
FL Guide length
FVL Guide rail extension
PFS Slot position
SDF Slot distance guide rail: 100 ... 1200

Guide extension and facet 270
Guide rail fastenings 262
Installation window 276

Fastening points

Transverse and holding force per fastening point at least 700 N.

Without guide rail extension, with facet

hl	AS
≤ 1500	2
1501 ... 2700	3
2701 ... 3900	4
3901 ... 5100	5
> 5100	6

Regular

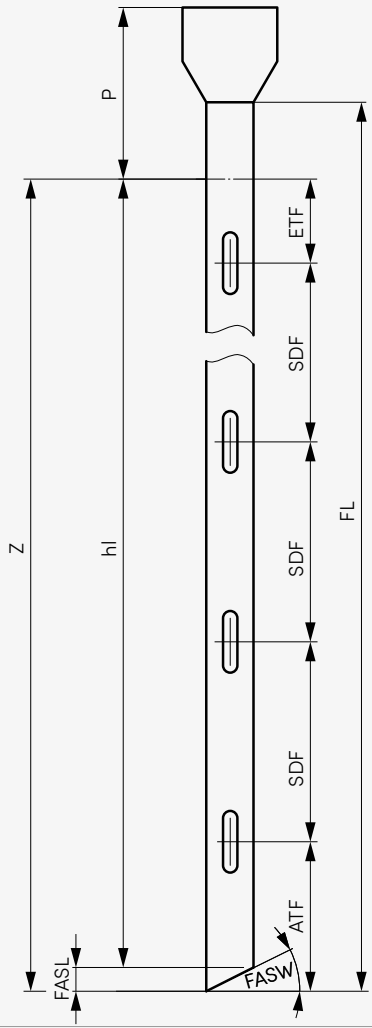

Irregular

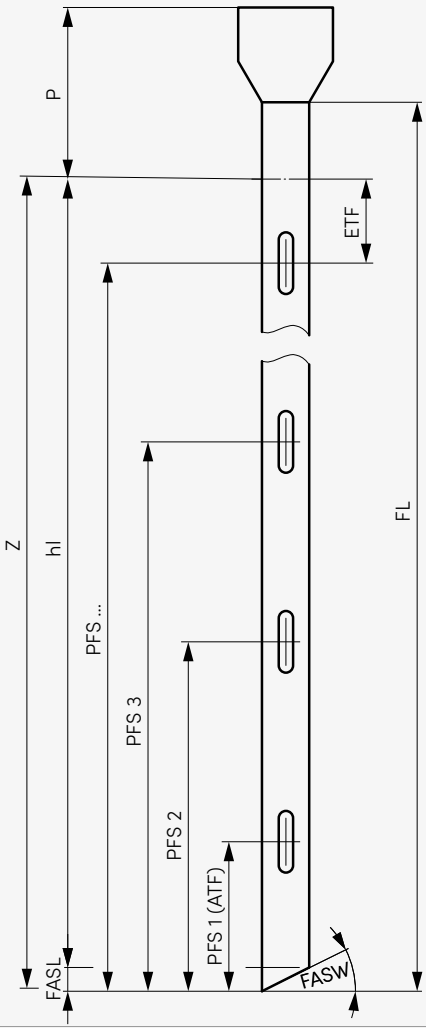

AS Number of slits
ATF Initial spacing guide rail (standard 200)
ETF Endspacing guide rail (standard 100)
FASL Guide rail facet length
FASW Guide rail facet angle
FL Guide length
PFS Slot position
SDF Slot distance guide rail: 100 ... 1200

Guide extension and facet 270
Guide rail fastenings 262
Installation window 276

Fastening points

Transverse and holding force per fastening point at least 700 N.

With guide rail extension and facet

Z	AS
≤ 1500	2
1501 ... 2700	3
2701 ... 3900	4
3901 ... 5100	5
> 5100	6

Regular

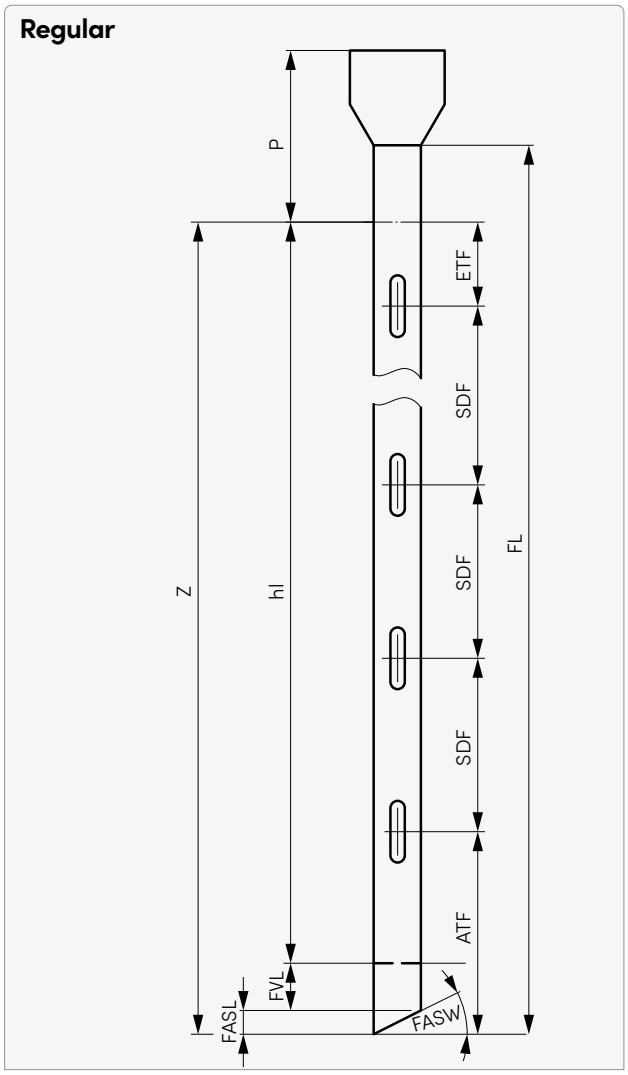

Irregular

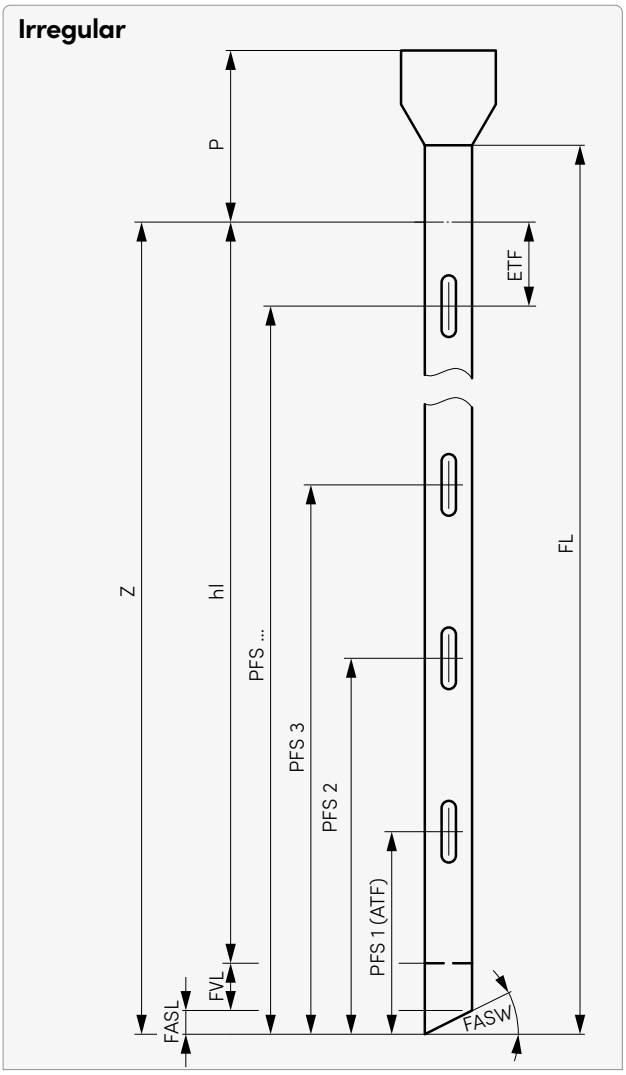

AS Number of slits
ATF Initial spacing guide rail (standard 200)
ETF Endspacing guide rail (standard 100)
FASL Guide rail facet length
FASW Guide rail facet angle

FL Guide length
FVL Guide rail extension
PFS Slot position
SDF Slot distance guide rail: 100 ... 1200

Guide extension and facet 270
Guide rail fastenings 262
Installation window 276

Connected systems

System width

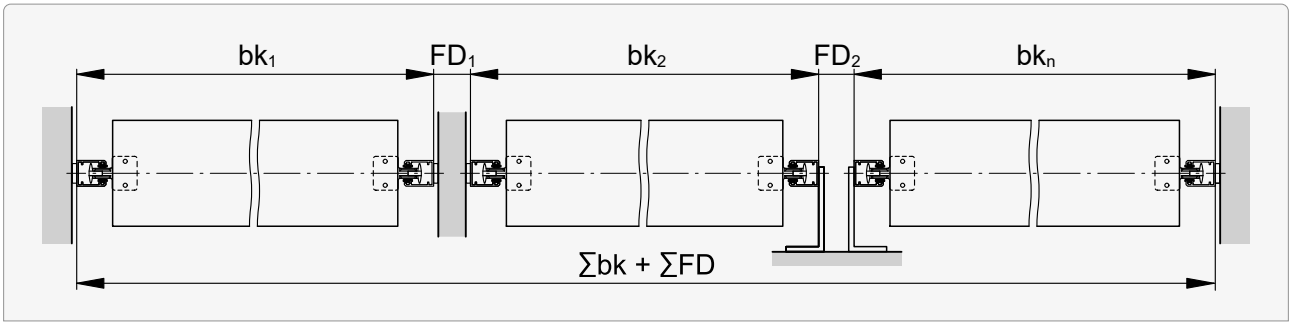

Distance between guides FD

Single guide | Fix guide

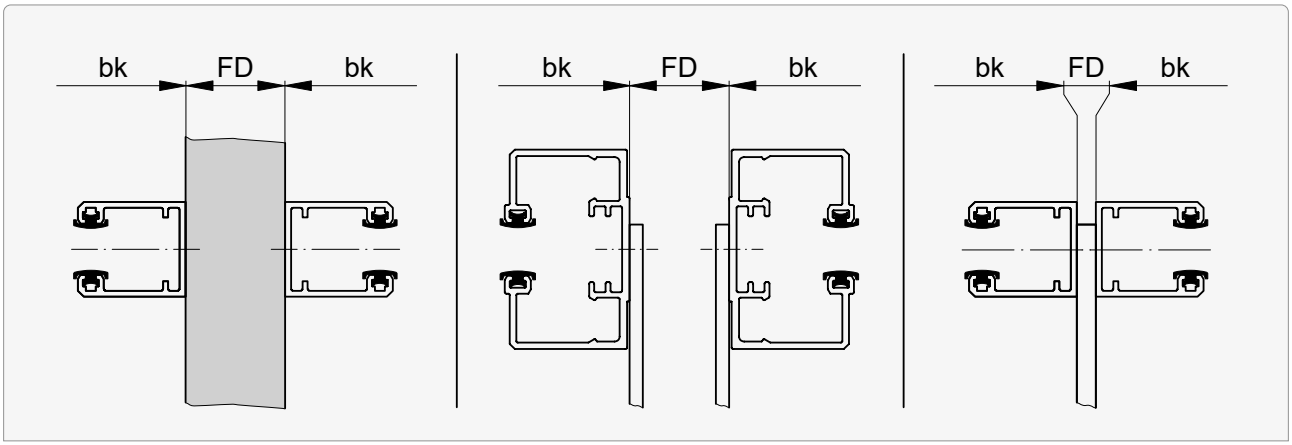

FD min.	FD max.
5	1000

Double guide

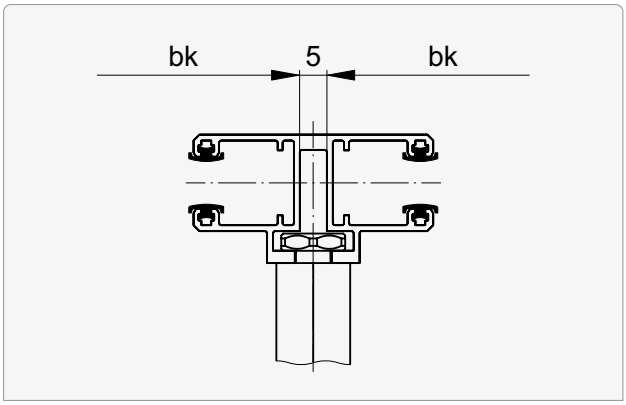

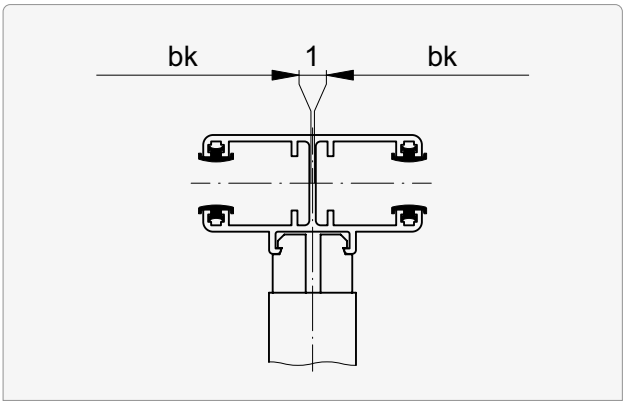

Opening for connected blinds.....**282**

Connected systems

Drive position

Gearbox

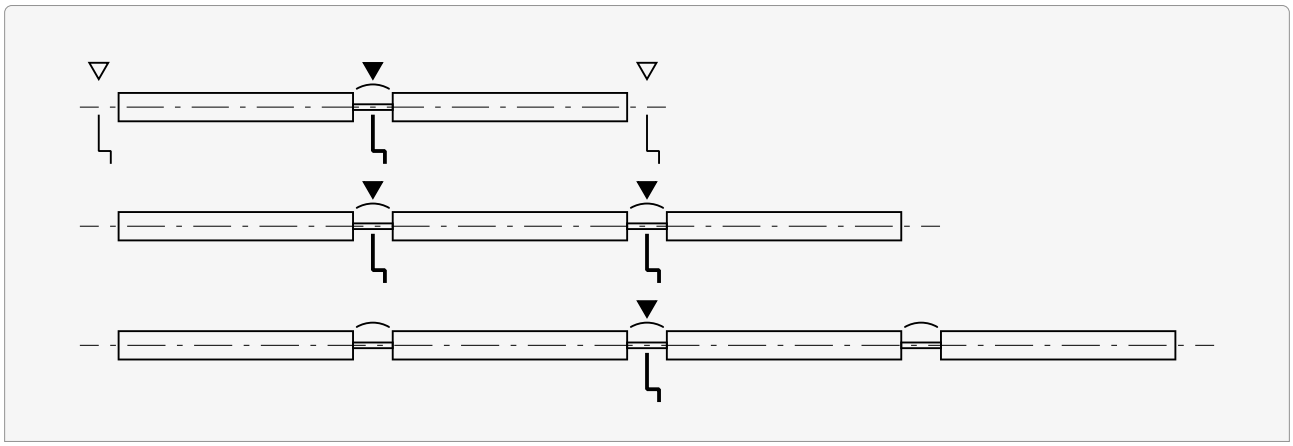

Motor

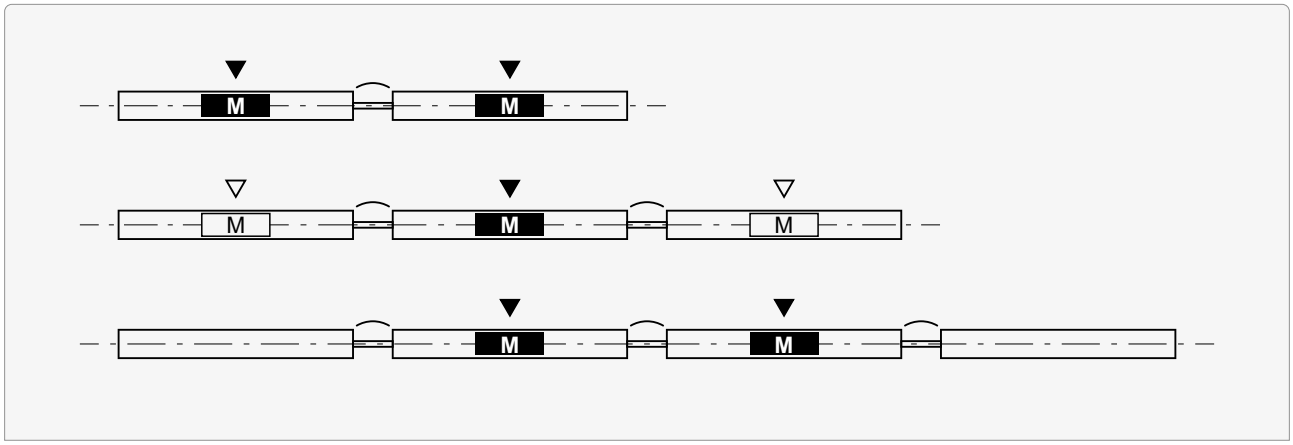

▼ Standard drive position
▽ Possible drive position

Opening for connected blinds

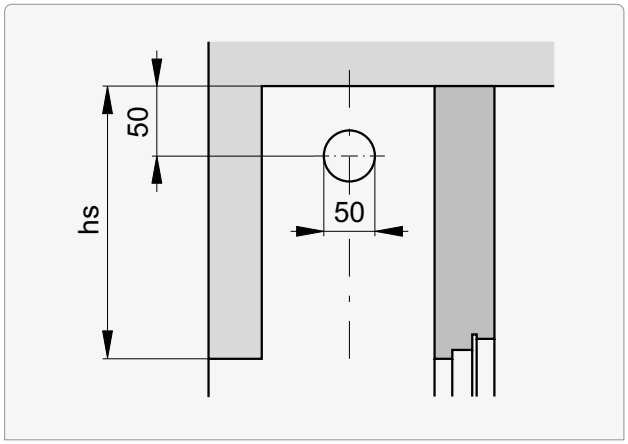

Cable guide

Soffit-/facade mounting

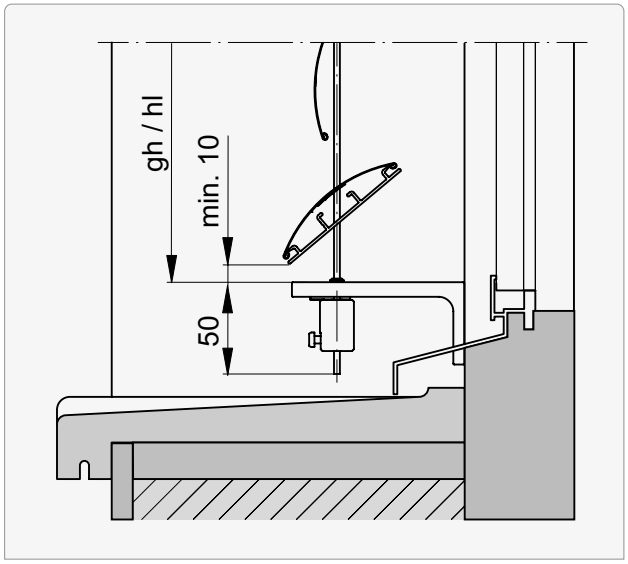

Window ledge mounting

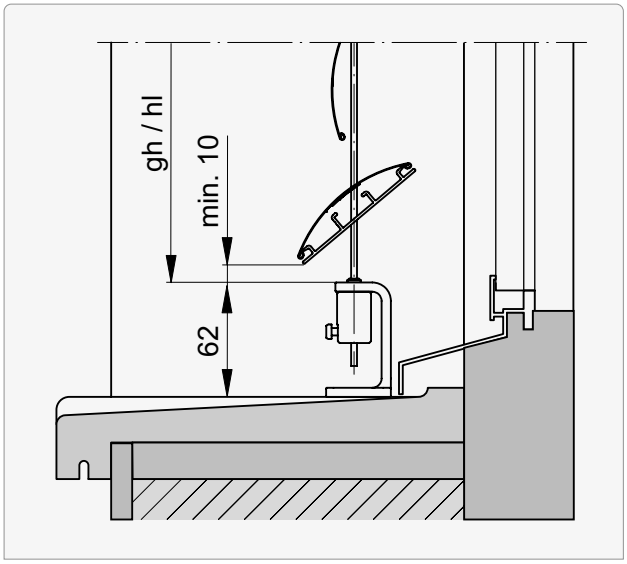

Cable fastenings....292

Distance between guides **FD**....294

Sections | Details

Horizontal section

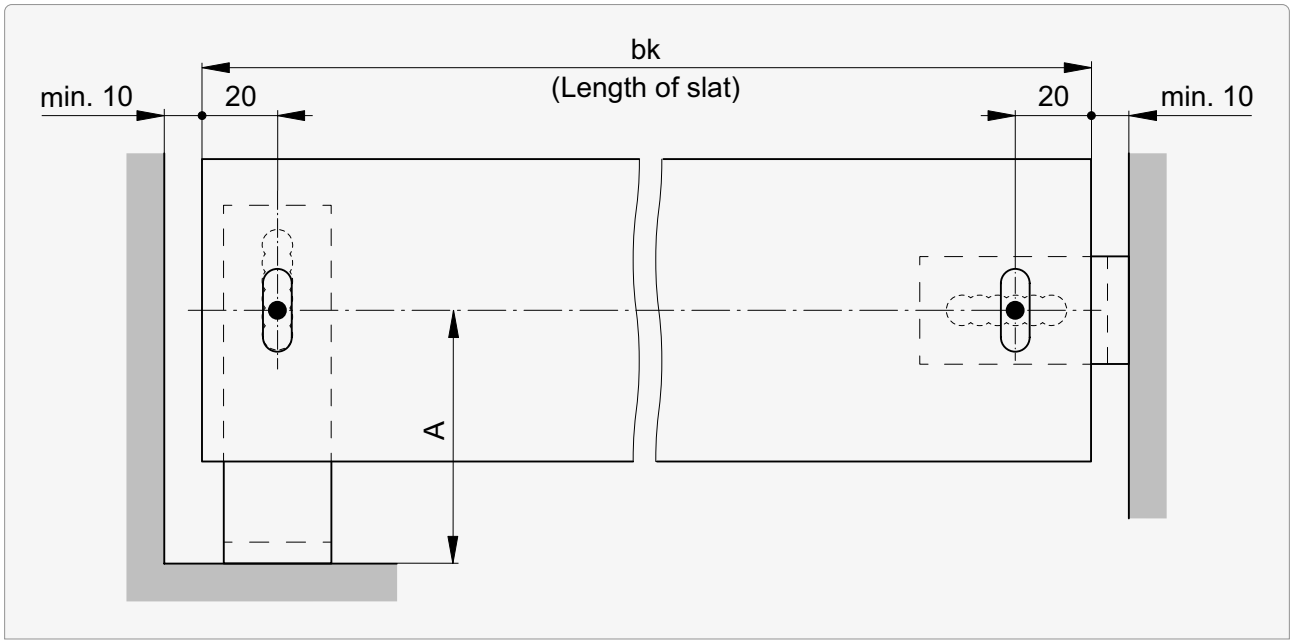

Value for **A**....241

Sections | Details

Horizontal section: Box

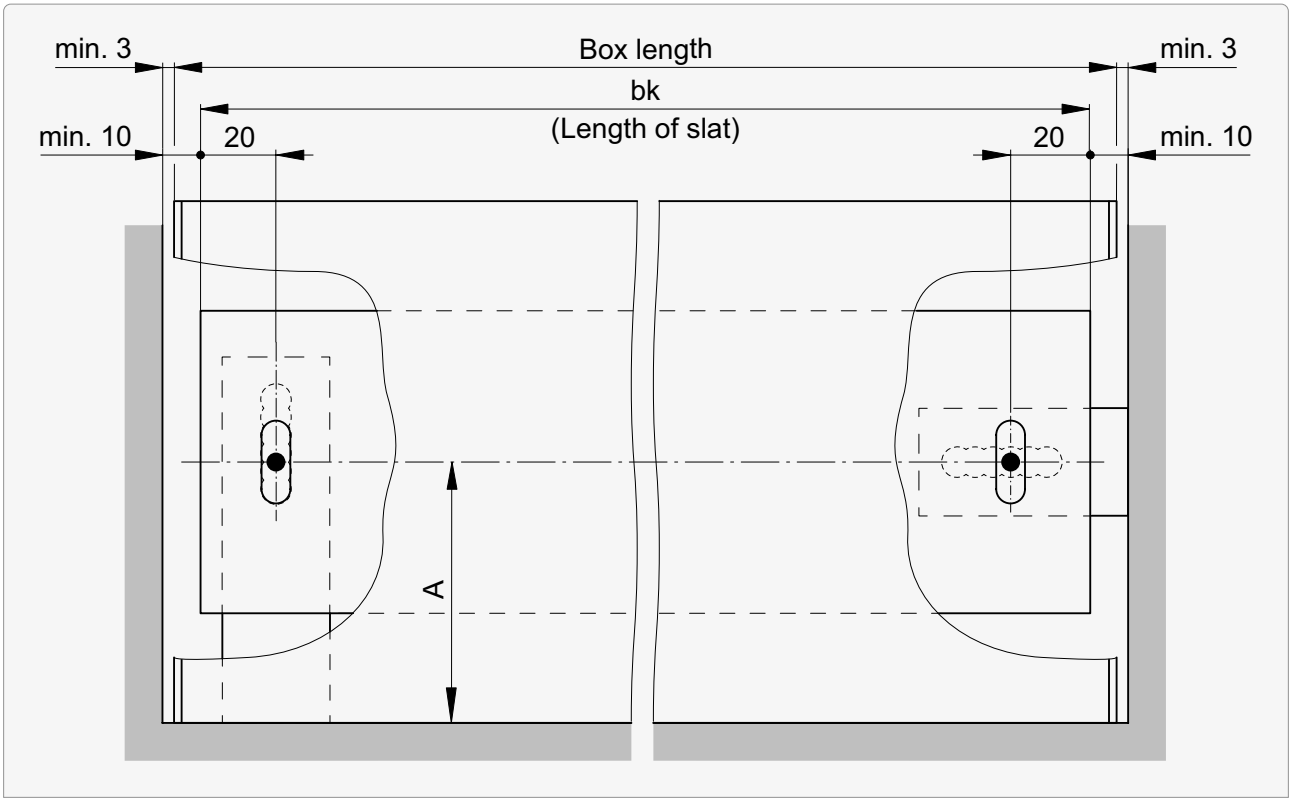

Value for **A**.....**241**

Horizontal section: Box extension

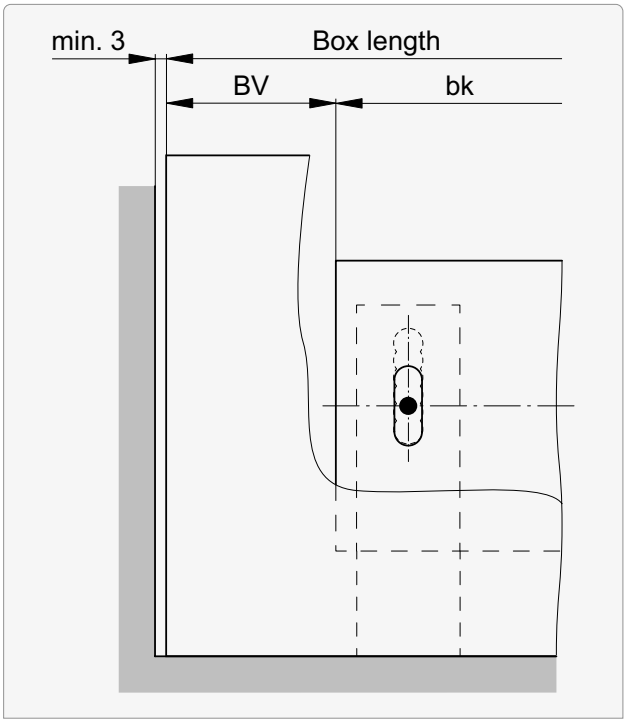

Sections for crank drive (MBMA)

outside bk

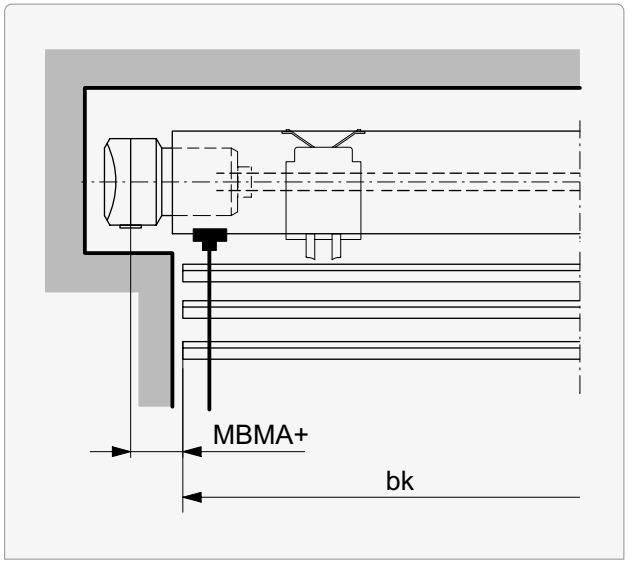

within bk

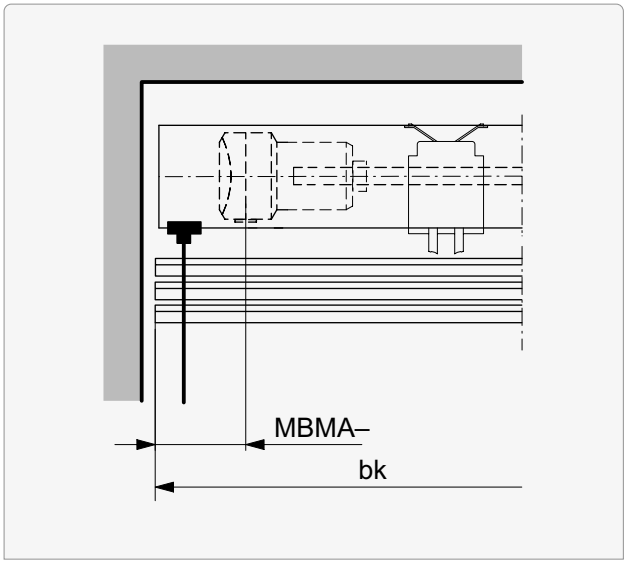

MBMA+[1]	MBMA–
20 … 999	80 … (bk / 2)

[1] With 20 … 44, provide sufficient niche depth for the box extension (min. 80).

Additional cables

Additional cables must be fitted for a bk > 3000 and in locations which are exposed to high wind.
The dimensions **P1** and **P2** are **measured from the left from bk** and **must be noted on the dimensions sheet.**
P2 does not apply for the first additional cable.

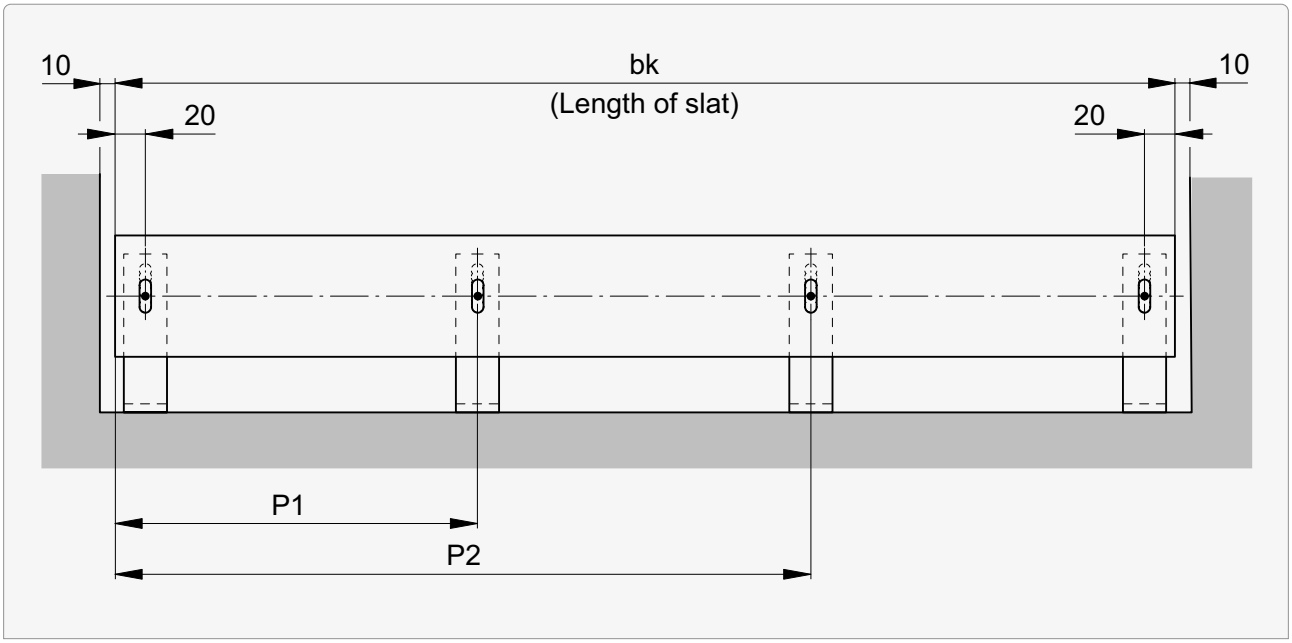

P1 Position of first cable or cable on left
P2 Position of cable on right

Number of additional cables

If no information is provided for P1 or P2, they are positioned according to the following table.

Width max. (bk)	**Number of additional cables**	**P1**	**P2**
≤3000	0	–	–
3001 ... 4000	1	(bk / 2)	–
>4000	2	(bk / 3)	2 (bk / 3)

Cable fastenings.....**292**

Vertical connections | Standard motor position

Number of bearings

Solomatic® II 70

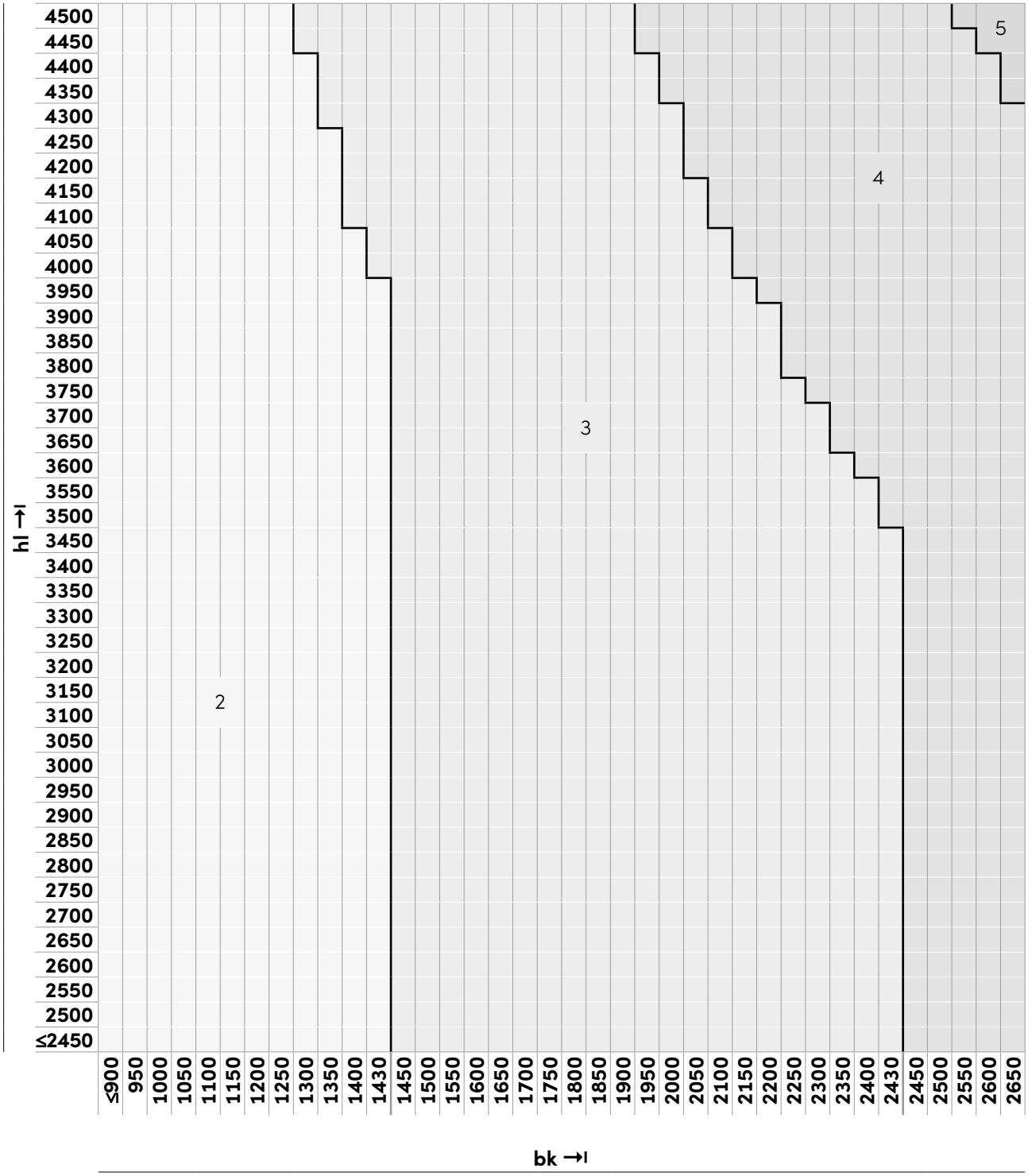

Standard motor position 291

Vertical connections | Standard motor position

Number of bearings

Solomatic® II 70



Vertical connections | Standard motor position

Number of bearings

Solomatic® II 80



Standard motor position 291

Vertical connections | Standard motor position

Number of bearings

Solomatic® II 80

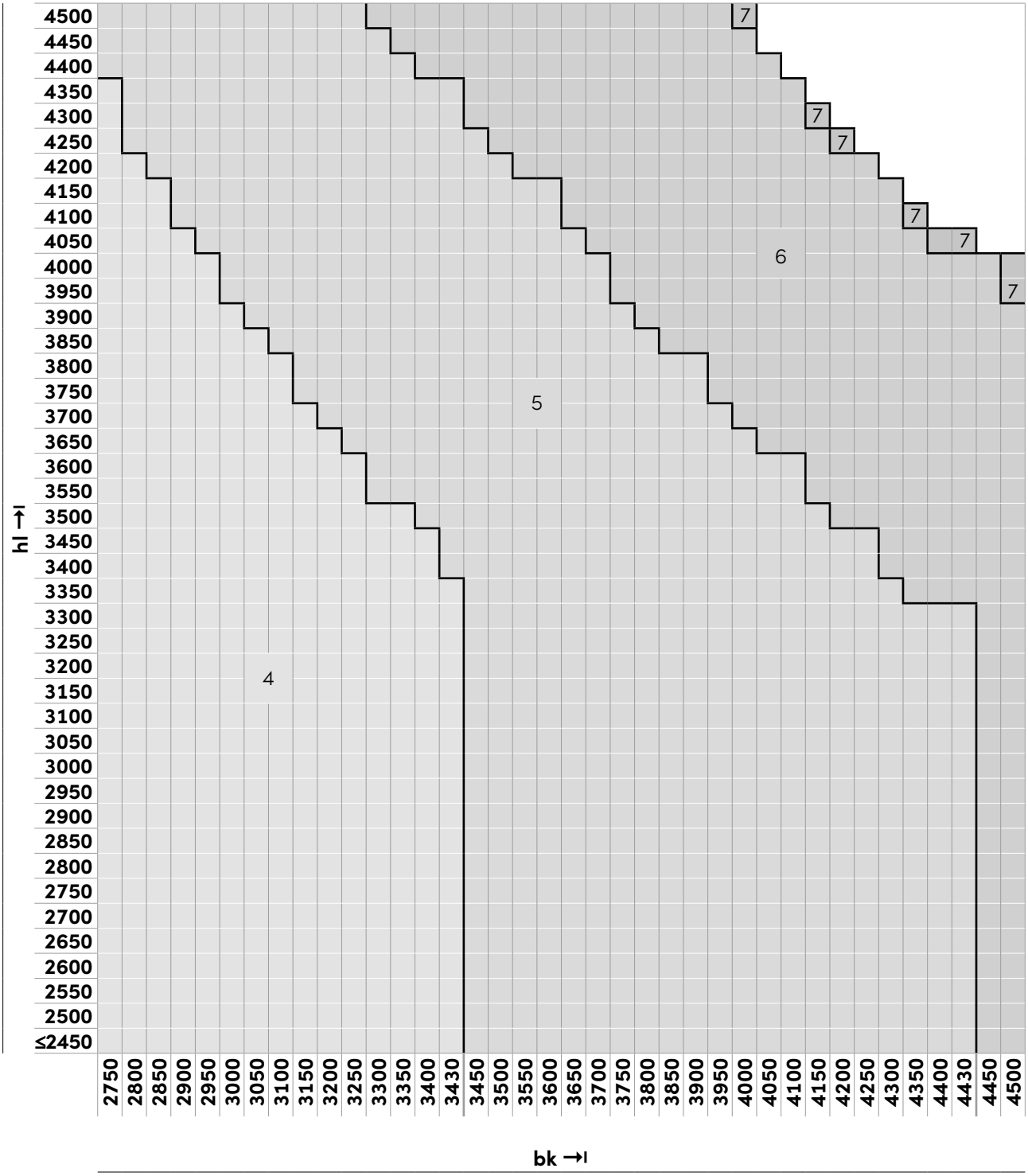

Vertical connections | Standard motor position

Standard motor position

Number of bearings	Standard motor position
2	
3	
4	
5	
6	
7	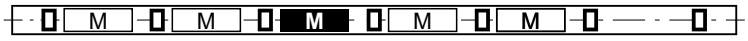

Bearing
M Standard motor position
M Possible motor position (on request)

Cable fastenings

Transverse and holding force

Projection	20 - 40	45 - 70
per fastening point at least	1000 N	1500 N

S Soffit or facade installation

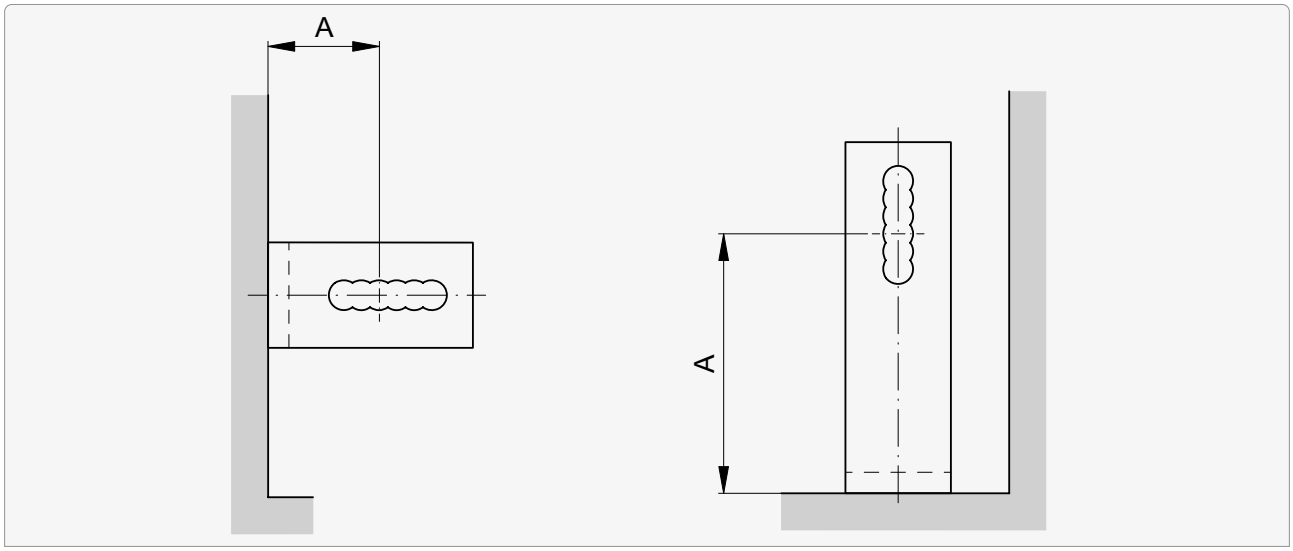

Tensioning bracket 20–40 for type S

Tensioning bracket 45–70 for type S

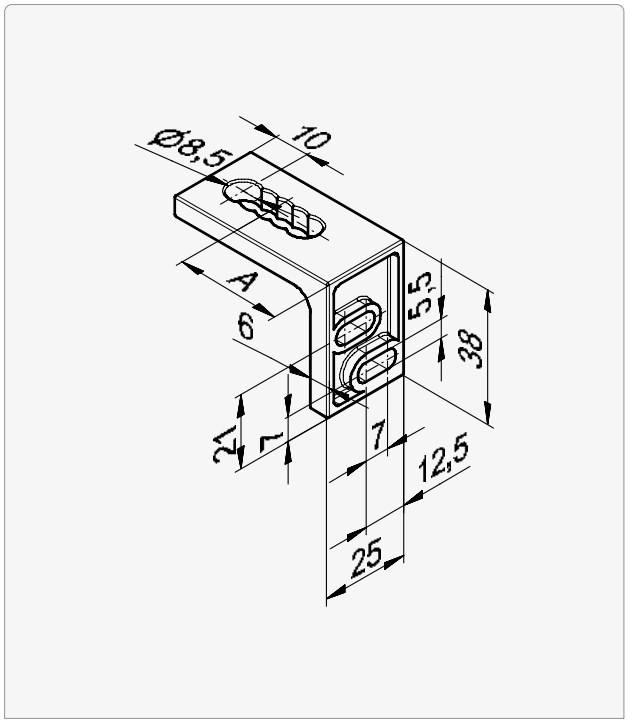

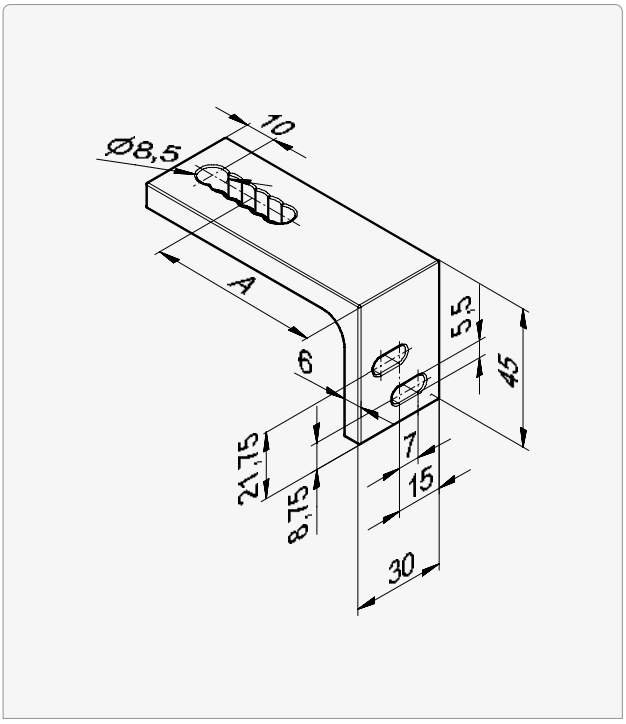

A*
20 ... 40

A*
45 ... 70

* in 5 mm steps

Cable fastenings

Transverse and holding force

Projection	75 - 130	135 - 190
per fastening point at least	2300 N	2800 N

Tensioning bracket 75–130 for type S

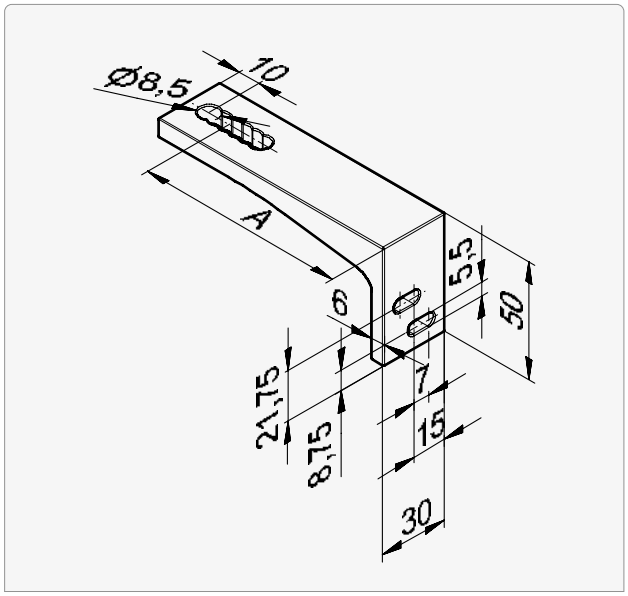

A*
75 ... 100
105 ... 130

Tensioning bracket 135–190 for type S

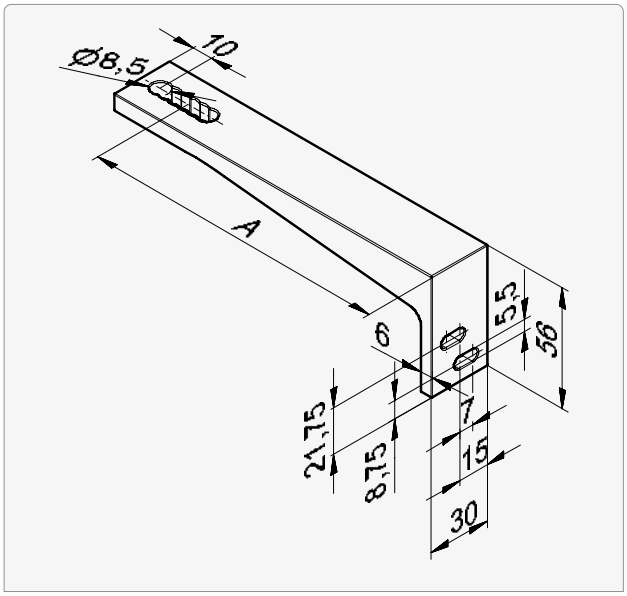

A*
135 ... 160
165 ... 190

* in 5 mm steps

NU Windowsill installation

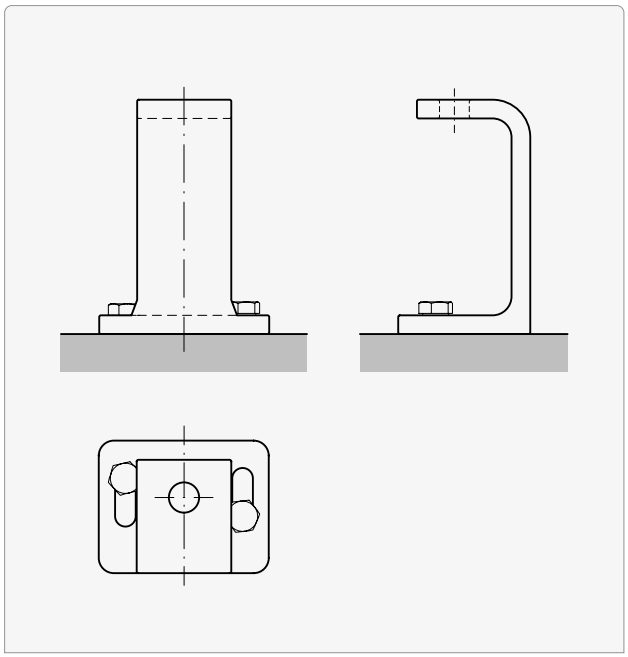

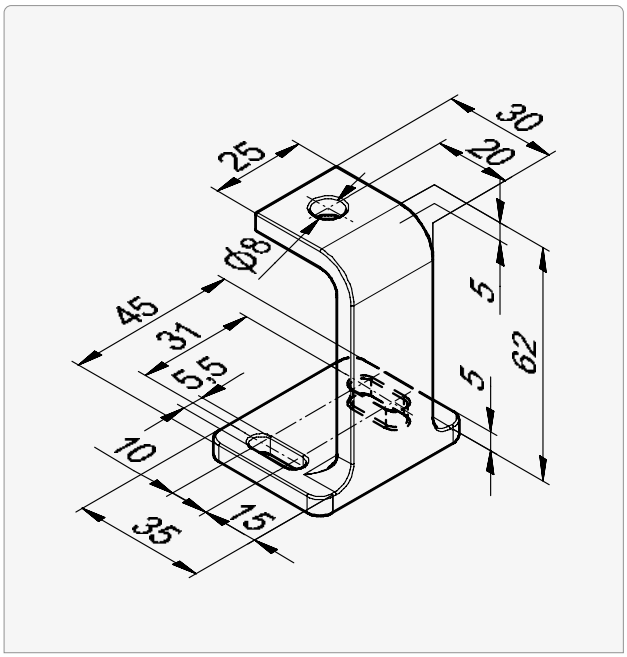

Transverse and holding force per fastening point at least 1200 N.

Connected systems

System width

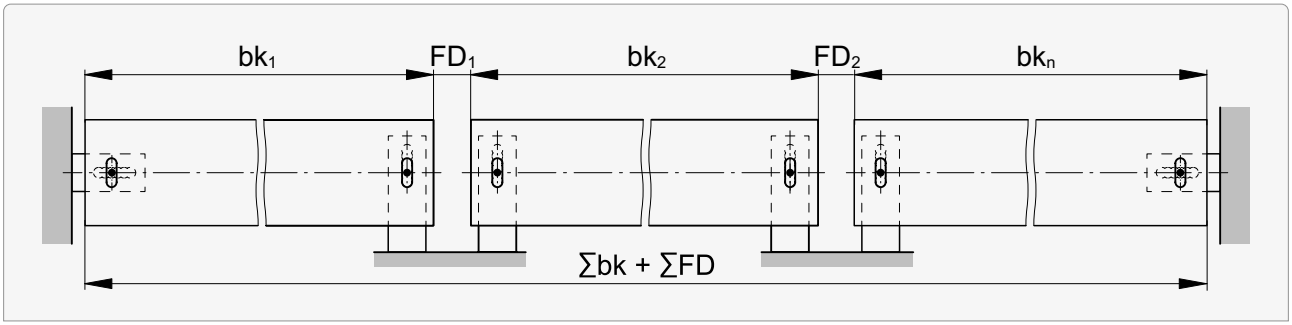

Distance between guides FD

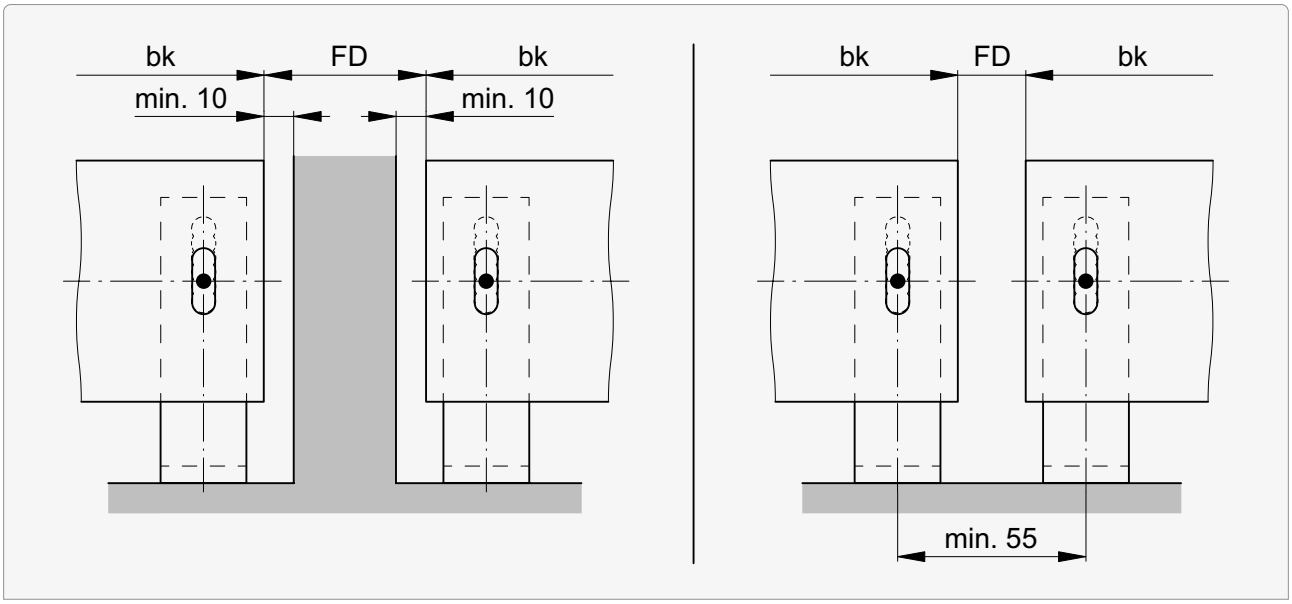

FD min.	FD max.
15	1000

Opening for connected blinds.....295

Connected systems

Drive position

Gearbox

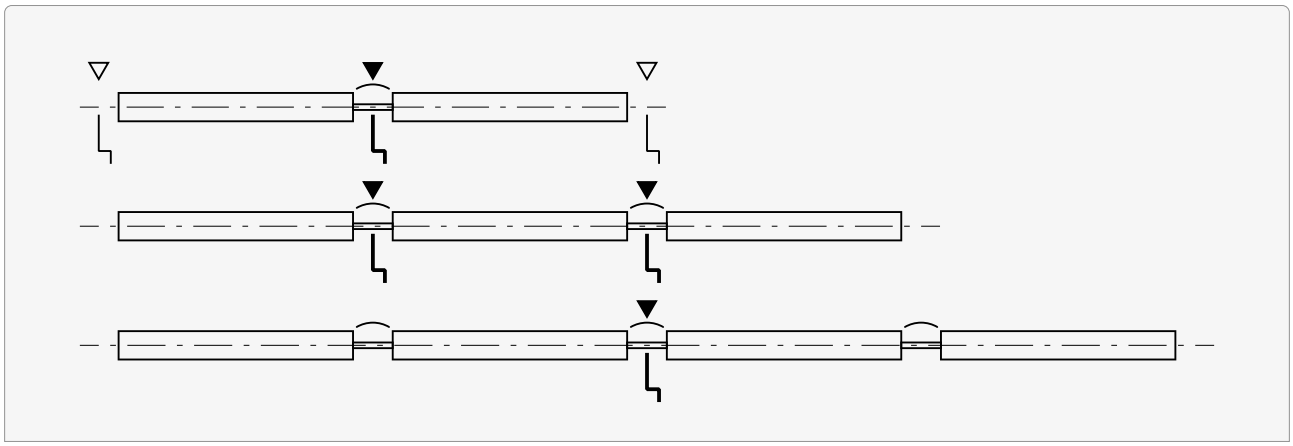

Motor

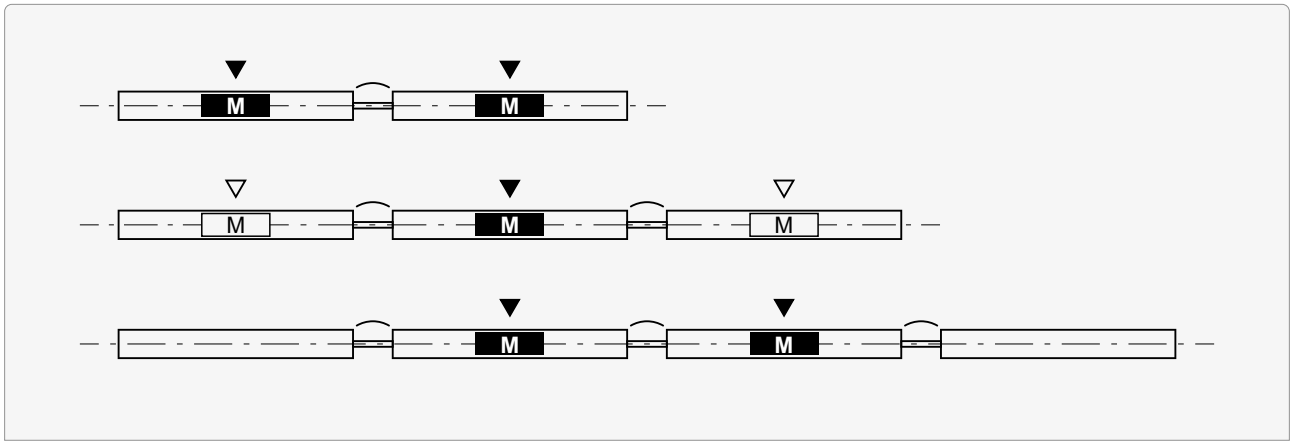

▼ Standard drive position
▽ Possible drive position

Opening for connected blinds

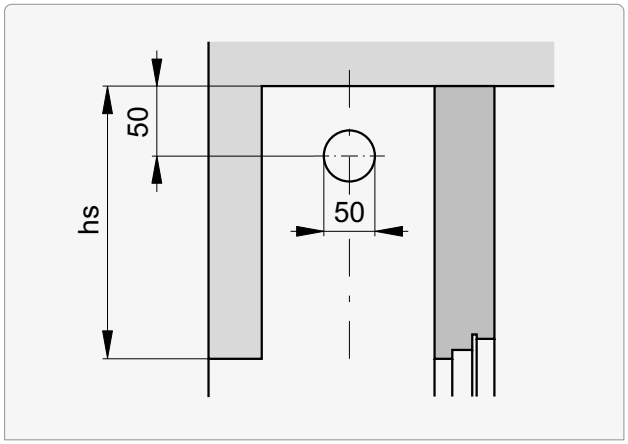

Solomatic® II System

Specifications	
Limit dimensions Solomatic® II System Profil	**297**
Limit dimensions Solomatic® II System Box	**297**

Mounting situations	
Built-in System	**298**
Installation system with box	**299**
Header dimensions | Heights of package	**300**
Slat profiles	**301**
End rails	**301**
Beginning distance | Slot spacing	**302**
Orientation of cable outlet	**303**
Guide rails	**304**
Sections | Details	**305**
Vertical connections | Standard motor position	**307**

Fastenings	
Guide rail installation (principle)	**312**
Guide rail fastenings (principle)	**313**
Guide extension and facet	**314**
Guide rail end for window sill installation	**316**
Guide rail end for suspended guide rails	**316**
Fastening points Solomatic® II System Profil	**317**
Fastening points Solomatic® II System Box	**321**

Drive	
Technical data of motors	**325**

20261109

Limit dimensions Solomatic® II System Profil

Single blind

Operation	Width min. (bk)	Width[1] max. (bk)	Height min. (hl)	Height max. (hl)	Surface max. [m²]
Motor drive	600	4500	440[2] 390[3]	4500[2] 5000[3]	15

Limit dimensions Solomatic® II System Box

Single blind

Operation	Width min. (bk)	Width[1] max. (bk)	Height min. (gh)	Height max. (gh)	Surface max. [m²]
Motor drive	600	4000	590[2] 630[3]	4845 4349[2] 4319[3]	15

[1] For buildings and high-rise structures, which are exposed to high winds, this maximum value should be decreased as required. Also see wind classes data sheet.

[2] Solomatic® II 70 System

[3] Solomatic® II 80 System

Definitions of dimensions 327

Built-in System

Vertical section: Solomatic® II 70 System Profil

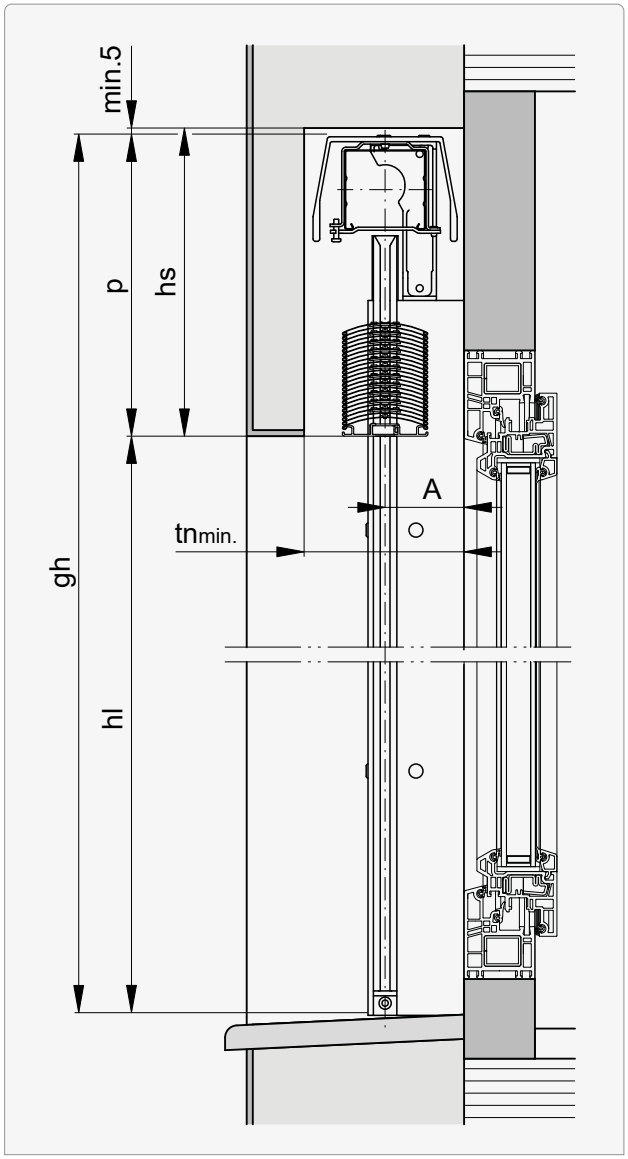

Vertical section: Solomatic® II 80 System Profil

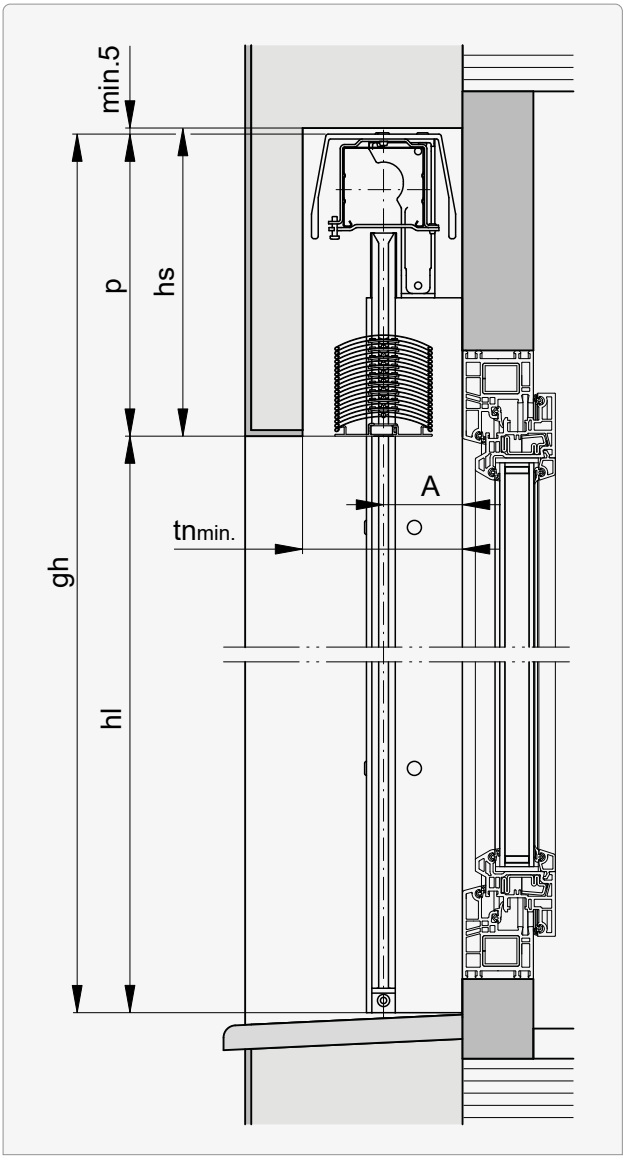

Horizontal section: Solomatic® II 70 System Profil

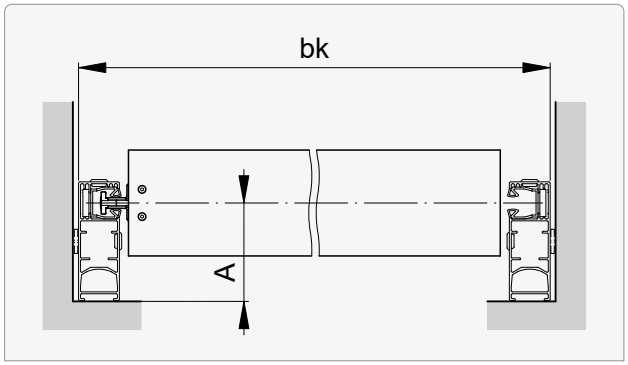

Horizontal section: Solomatic® II 80 System Profil

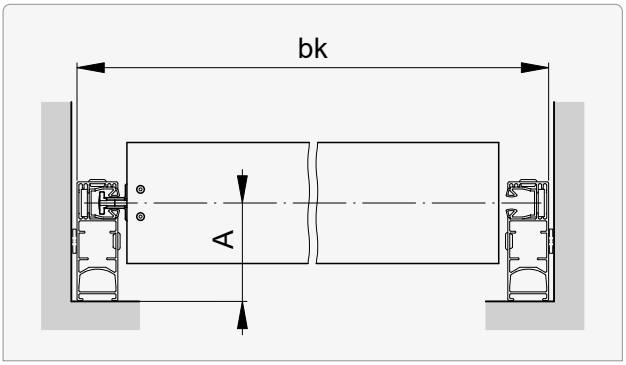

Sections | Details **305**

Values for **A** and **tn** **300**

Installation system with box

Vertical section: Solomatic® II 70 System Box

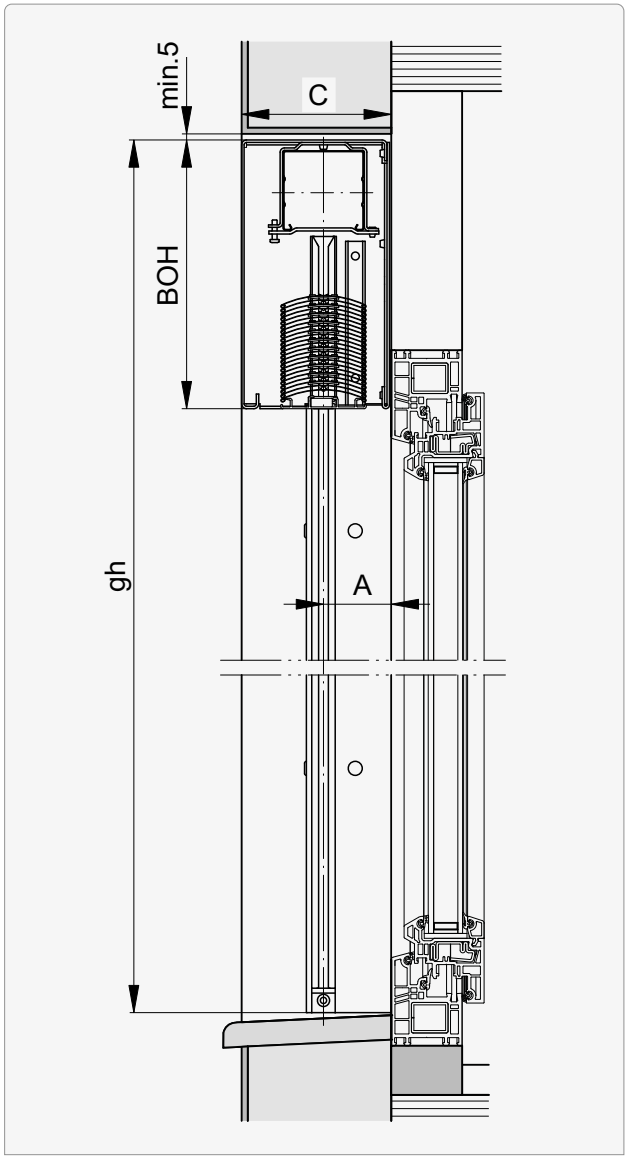

Box with slat package covered

Vertical section: Solomatic® II 80 System Box

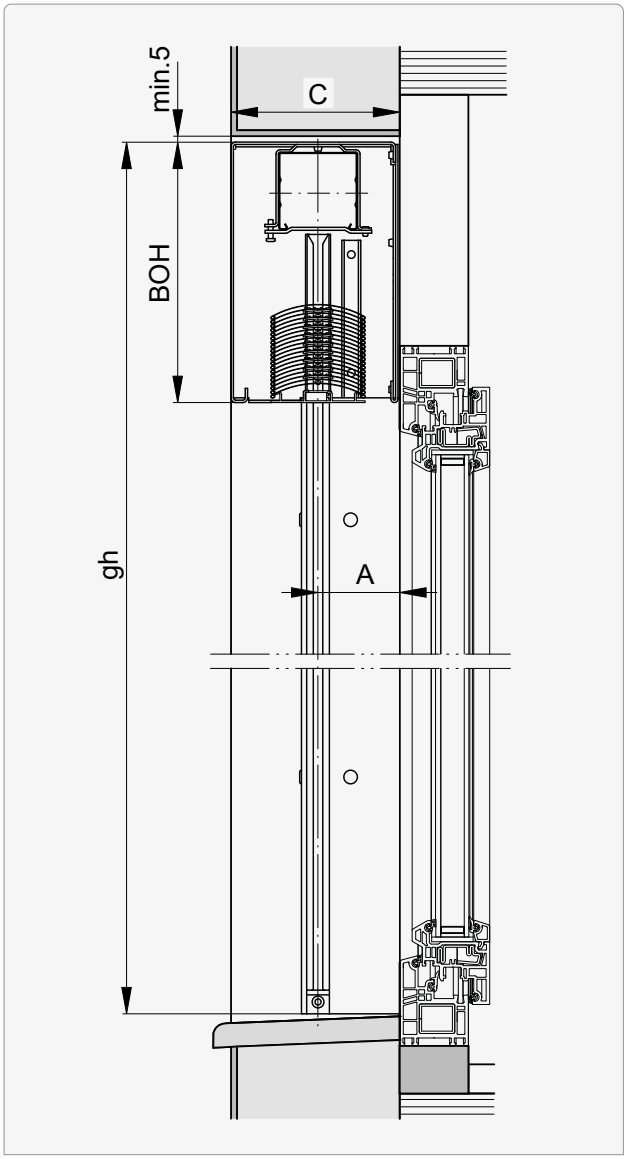

Box with slat package covered

Horizontal section: Solomatic® II 70 System Box

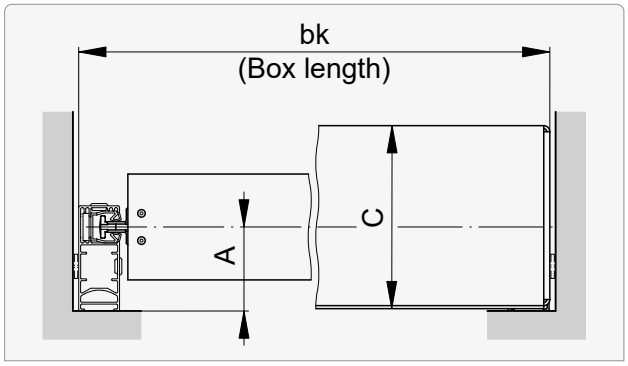

Horizontal section: Solomatic® II 80 System Box

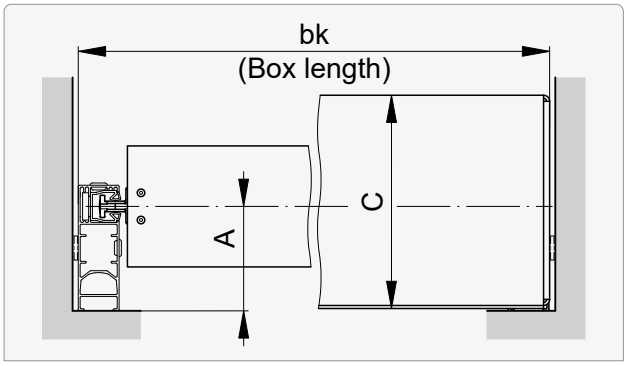

Sections | Details **305**

Values for **A**, **BOH** and **C** **300**

Header dimensions | Heights of package

Solomatic® II 70 System Profil

hl →I	P min.	hs	hl →I	P min.	hs
1000	175	180	**3000**	290	295
1250	195	200	**3250**	315	320
1500	210	215	**3500**	325	330
1750	220	225	**3750**	340	345
2000	235	240	**4000**	350	355
2250	250	255	**4250**	370	375
2500	265	270	**4500**	385	390
2750	280	285			

tn min.	A
130*	64.5

Solomatic® II 80 System Profil

hl →I	P min.	hs	hl →I	P min.	hs
1000	180	185	**3000**	270	275
1250	185	190	**3250**	280	285
1500	195	200	**3500**	295	300
1750	210	215	**3750**	305	310
2000	220	225	**4000**	320	325
2250	235	240	**4250**	335	340
2500	245	250	**4500**	345	350
2750	255	260			

tn min.	A
130*	64.5

Solomatic® II 70 System Box

gh →I	P	BOH	C	A
1490	188	190		
2020	218	220		
2760	258	260	121	55.5
3450	298	300		
4845		300[1]		

Solomatic® II 80 System Box

gh →I	P	BOH	C	A
1740	188	190		
2320	218	220		
3210	258	260	141	69
4000	298	300		
4845		300[1]		

[1] Slat package not covered (package projection)

* + possible addition for protruding weatherboard or doorknobs.

Header dimensions are approximate values which may exhibit **negative or positive deviations** depending on the technical circumstances. **A dimensional tolerance of ±5 mm** is observed for the header height.

Slat profiles

Solomatic® II 70 System

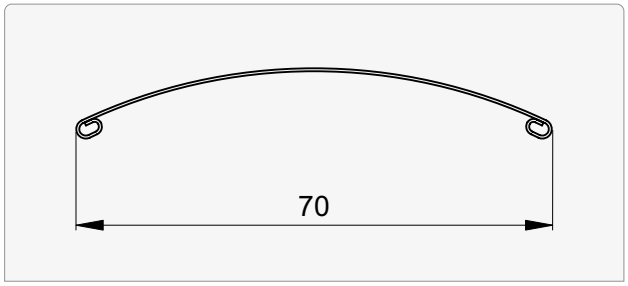

Solomatic® II 80 System

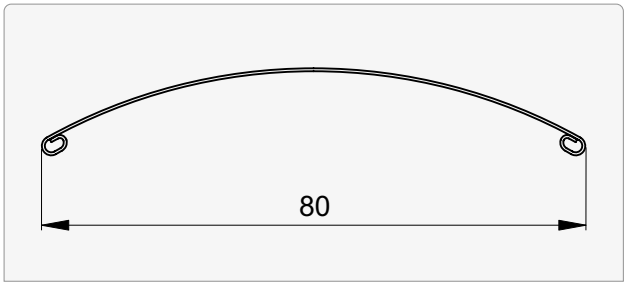

End rails

Solomatic® II 70 System

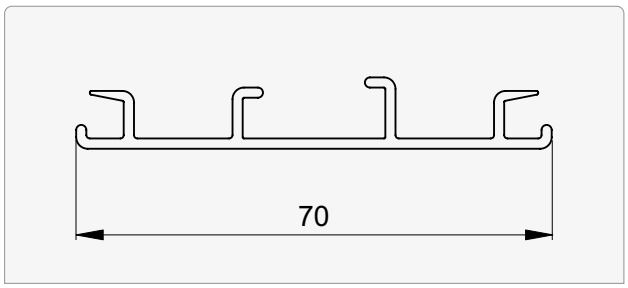

Solomatic® II 80 System

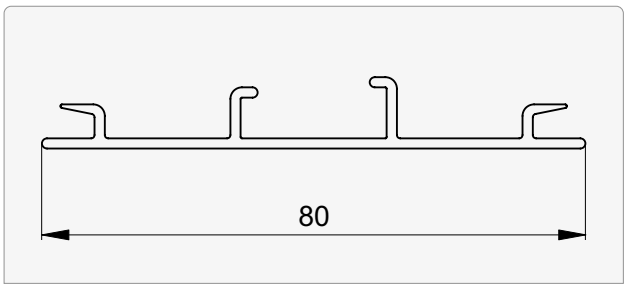

Beginning distance | Slot spacing

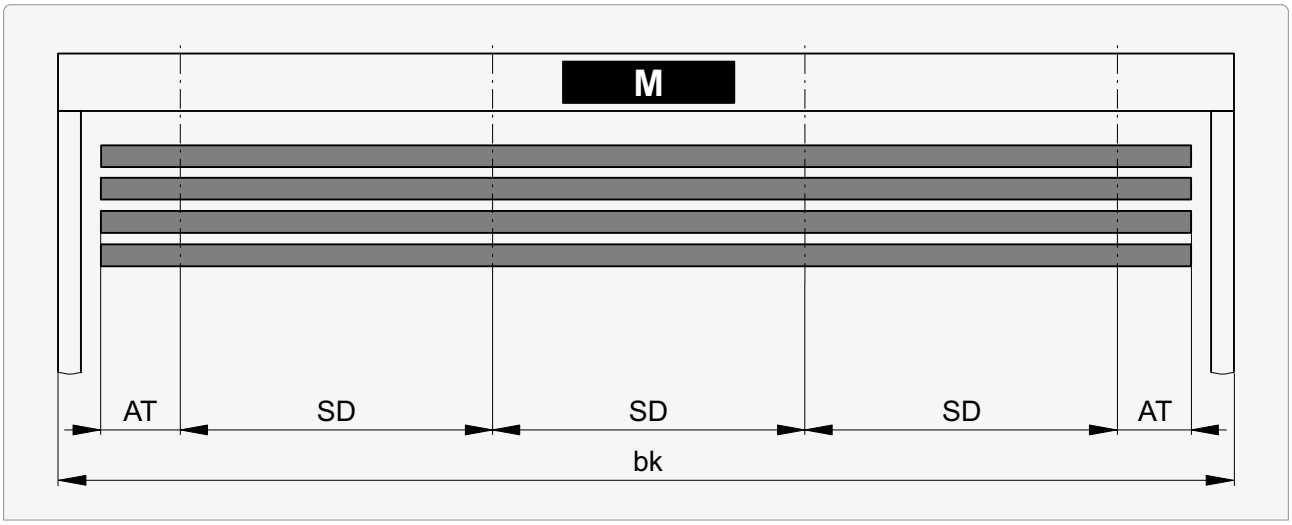

bk	AT min.	SD min.	SD max.
≤610	50		
611...1250	100	250*	1000*
>1250	200		

* Standard slot spacing machine fabrication

Deviations from the standard are posible when:

Deviation	Correction
Support loading too high	AS
Slot spacing < 250	AT + AS
With motor	AT + AS

Orientation of cable outlet

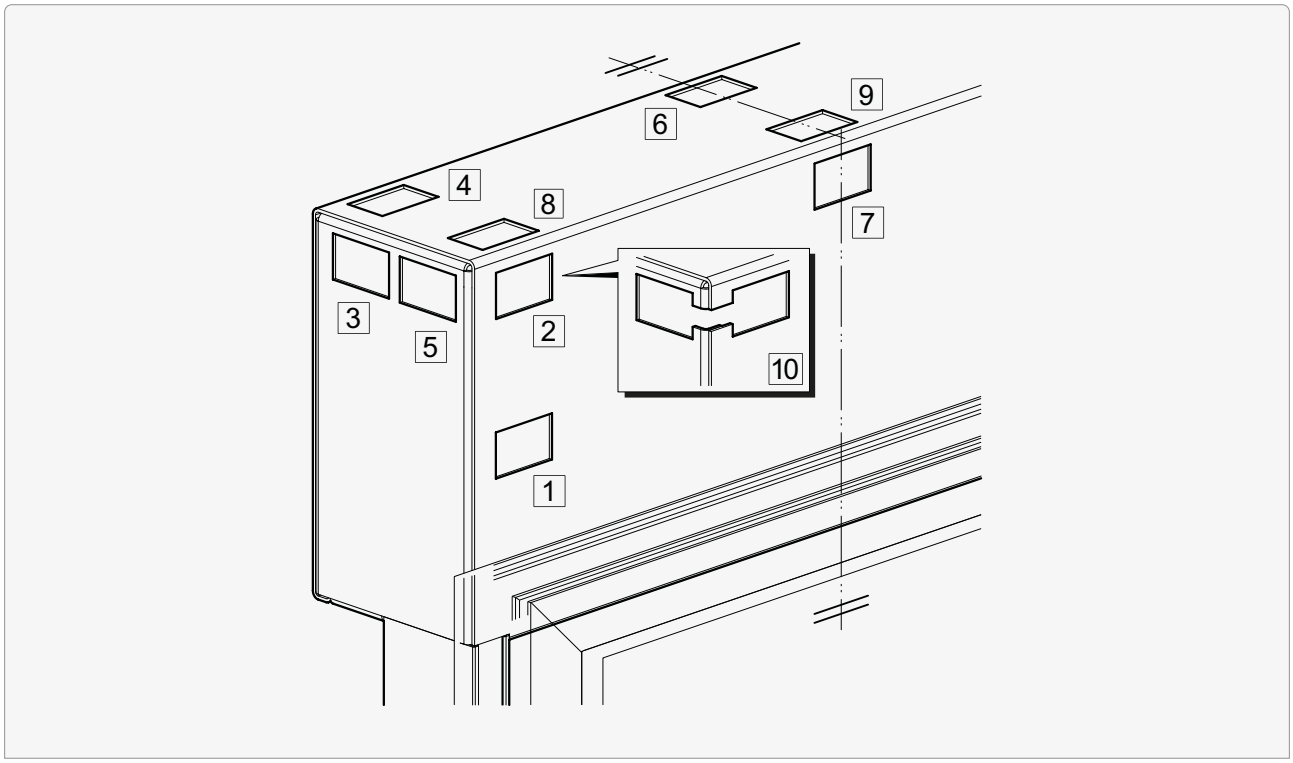

Solomatic® II 70 System

Position	Cable outlet Type									
	1	**2**	**3**	**4**	**5**	**6**	**7**	**8**	**9**	**10**
left	01L	02L*	03L	04L	05L	–	–	08L*	–	10L
centre	–	–	–	–	–	06M	07M*	–	09M*	–
right	01R	02R*	03R	04R	05R	–	–	08R*	–	10R

Solomatic® II 80 System

Position	Cable outlet Type									
	1	**2**	**3**	**4**	**5**	**6**	**7**	**8**	**9**	**10**
left	01L	02L*	03L	04L	05L	–	–	08L	–	10L
centre	–	–	–	–	–	06M	07M*	–	09M	–
right	01R	02R*	03R	04R	05R	–	–	08R	–	10R

***The plug cannot be passed through when assembled!**

Guide rails

Type P | Solomatic® II 70/80 System Profil

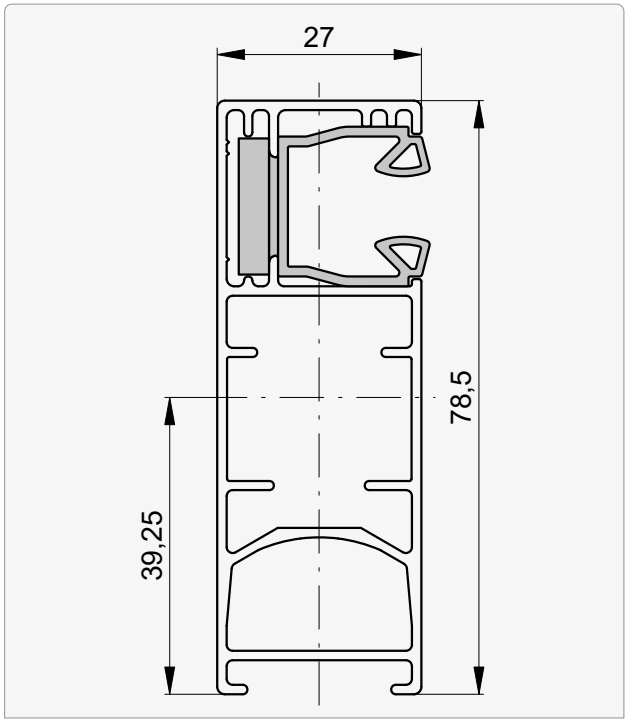

Type K | Solomatic® II 70 System Box

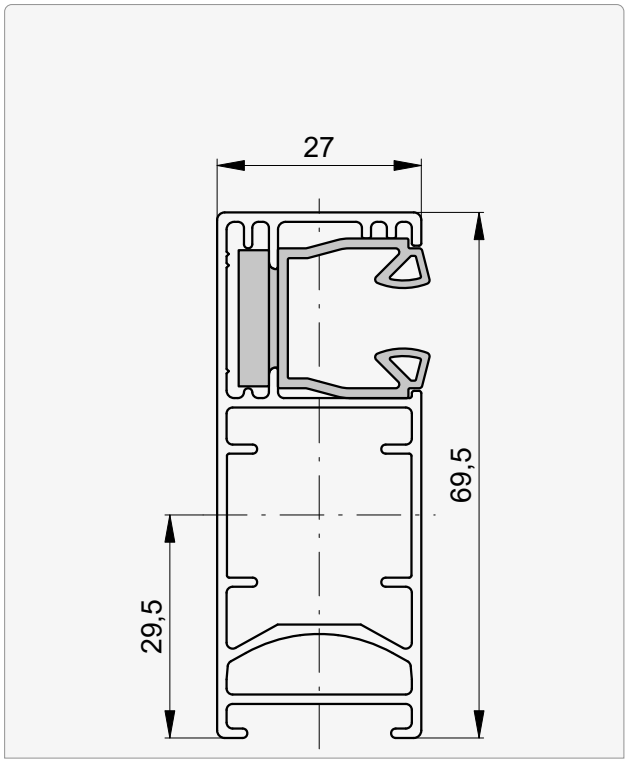

Type B | Solomatic® II 80 System Box

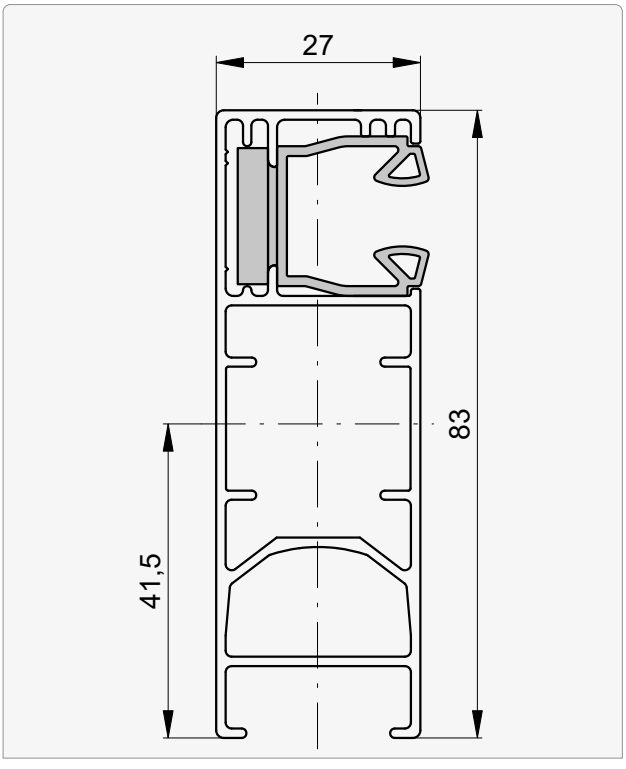

Fastening points ..... 317 | 321
Guide extension and facet 314
Guide rail fastenings 313

Sections | Details

Horizontal section: Solomatic® II 70 System Profil

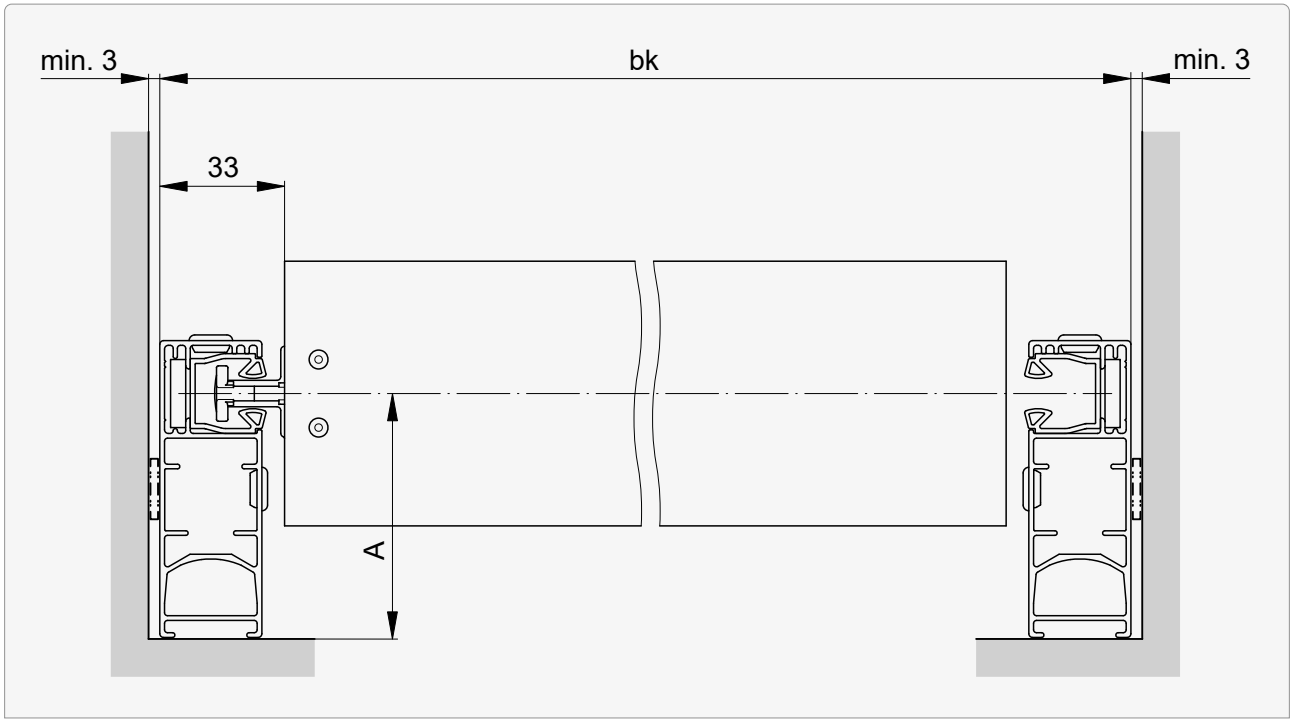

Horizontal section: Solomatic® II 80 System Profil

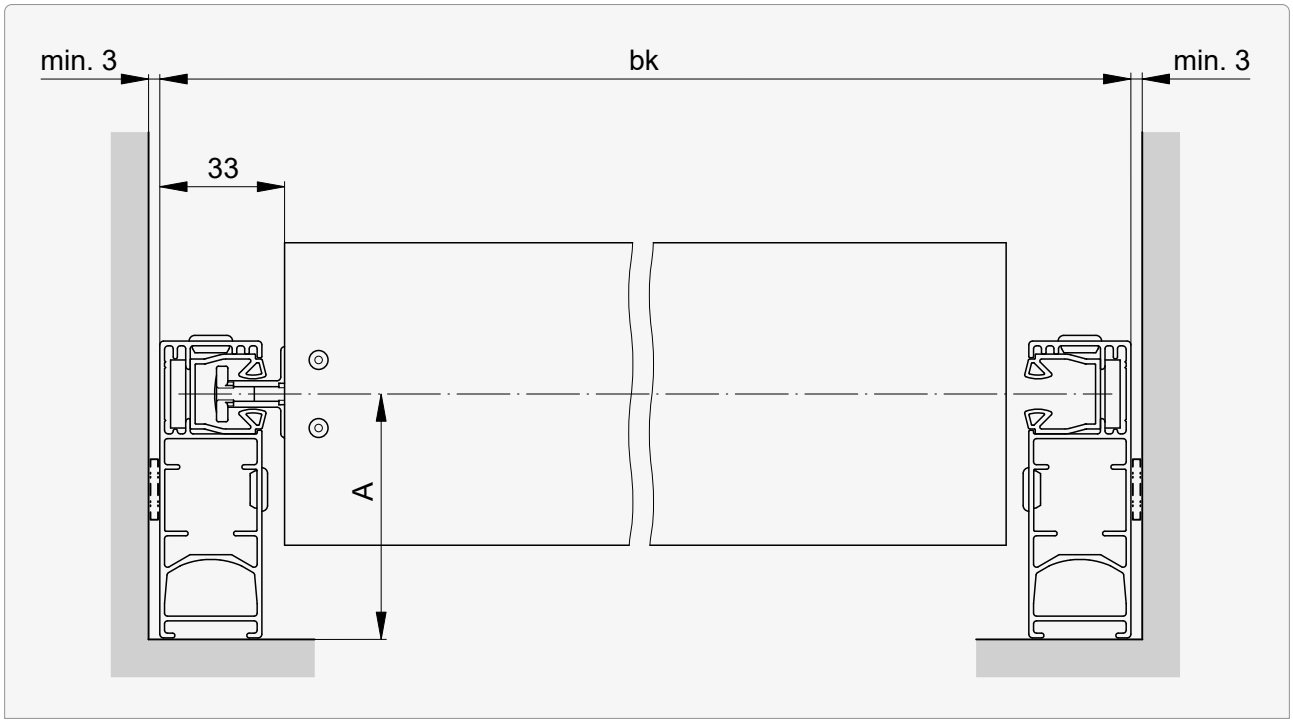

Value for **A**.....**300**

Sections | Details

Horizontal section: Solomatic® II 70 System Box

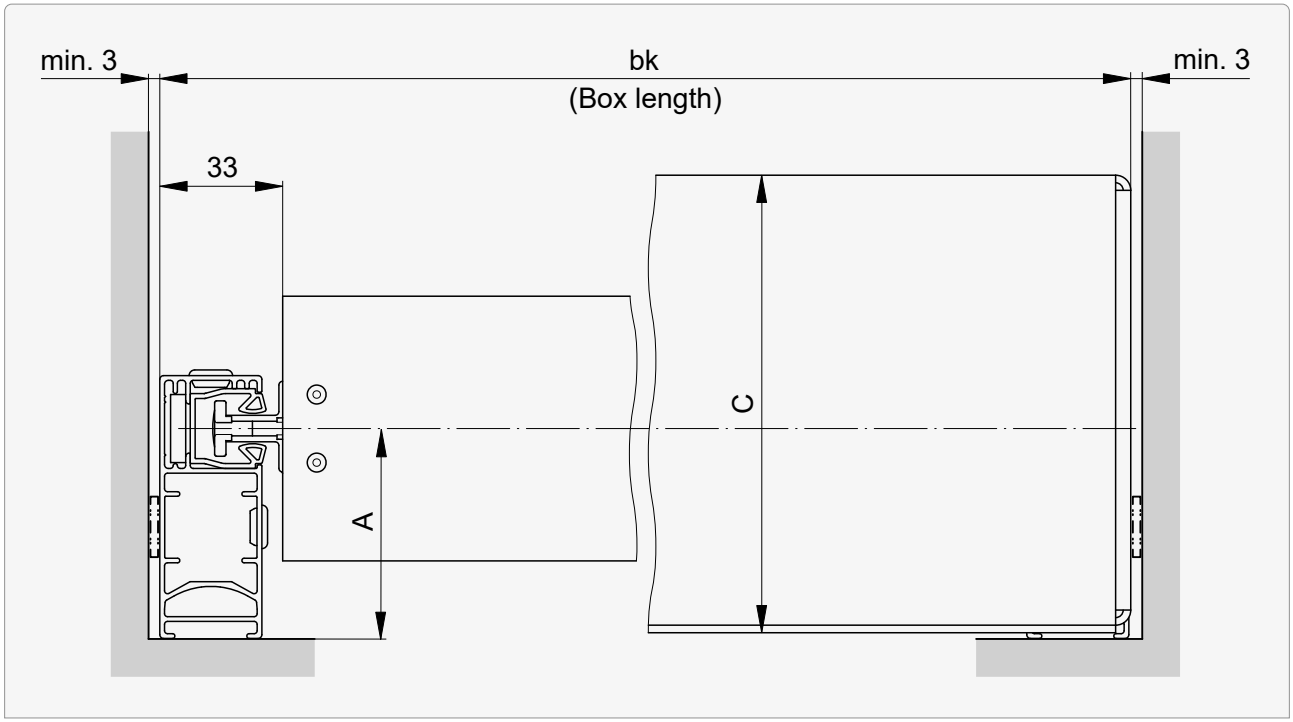

Horizontal section: Solomatic® II 80 System Box

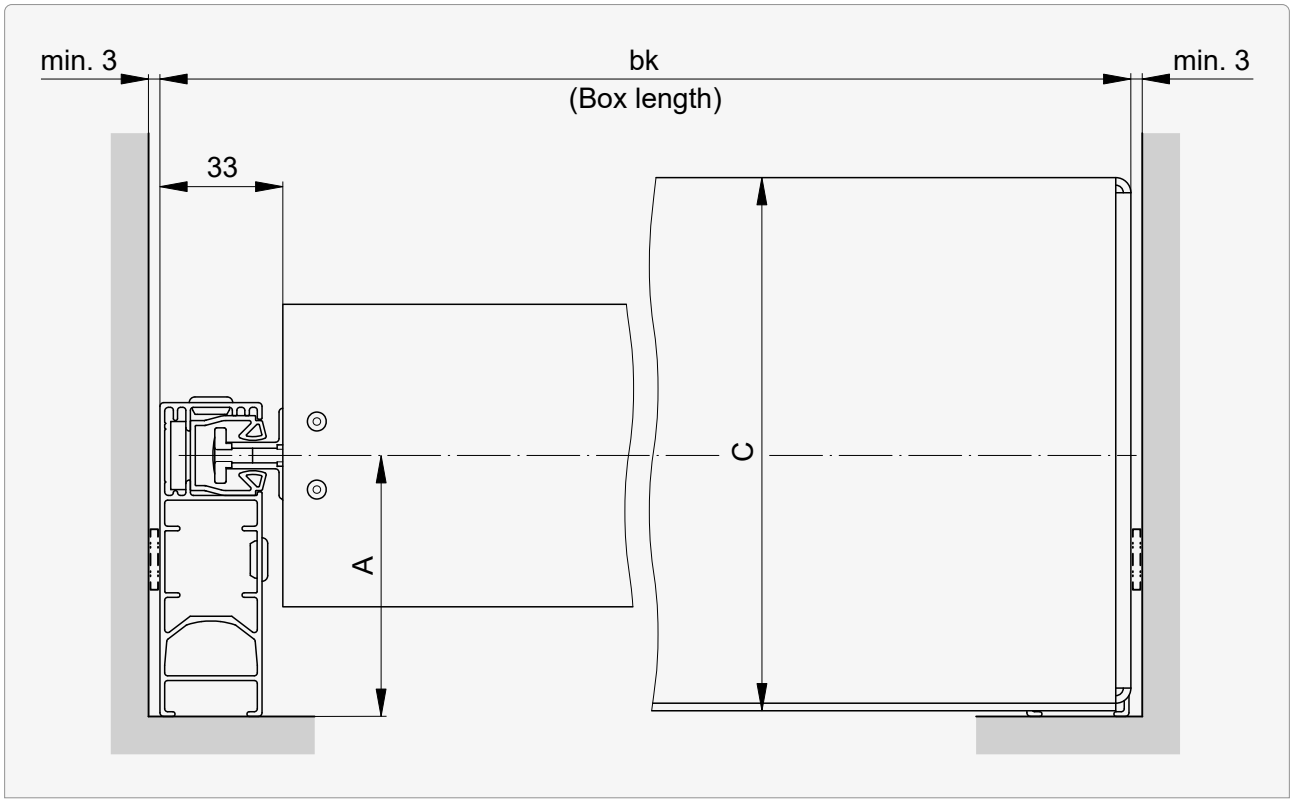

Values for **A** and **C** **300**

Vertical connections | Standard motor position

Number of bearings

Solomatic® II 70 System

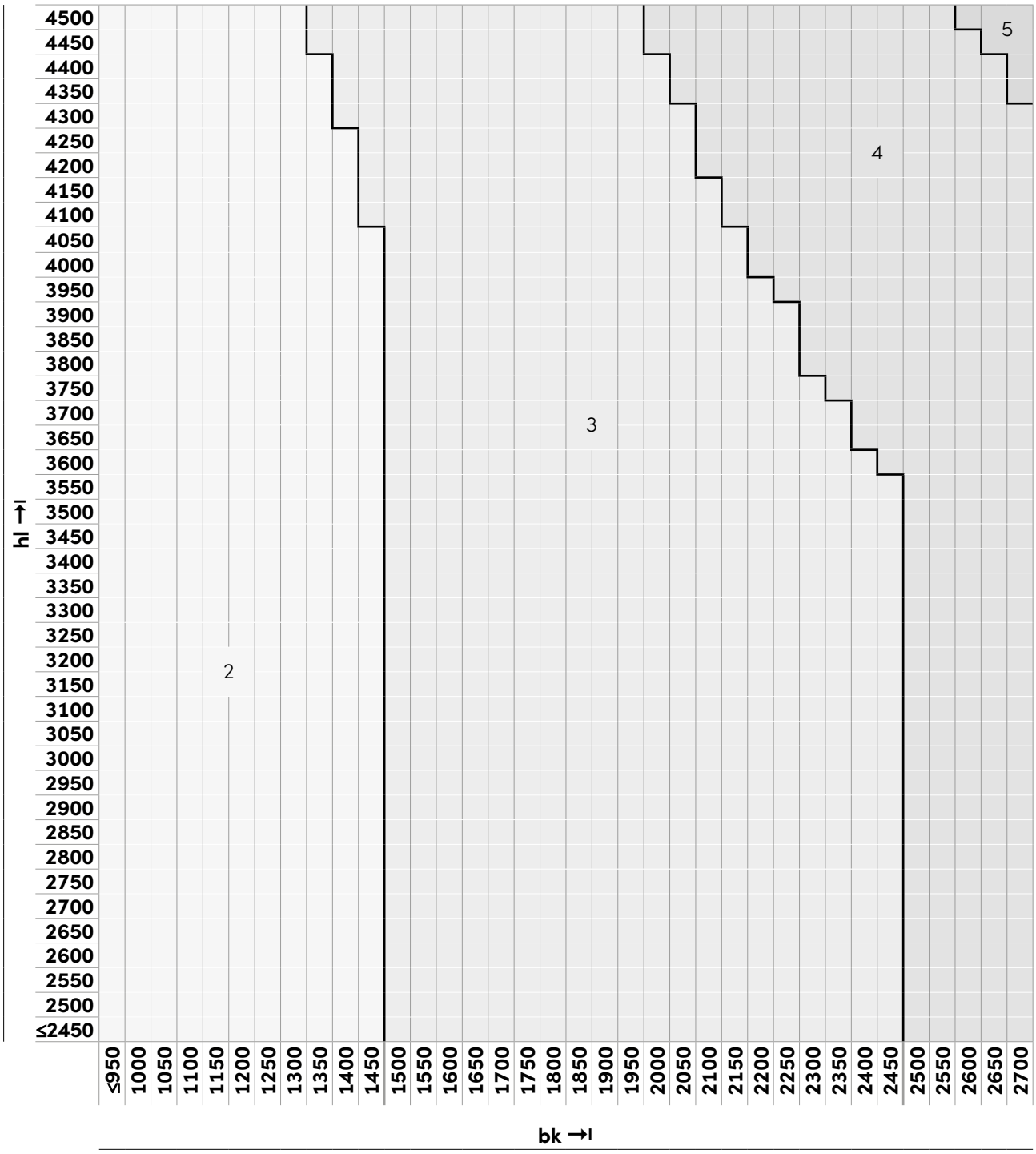

Standard motor position 311

Vertical connections | Standard motor position

Number of bearings

Solomatic® II 70 System

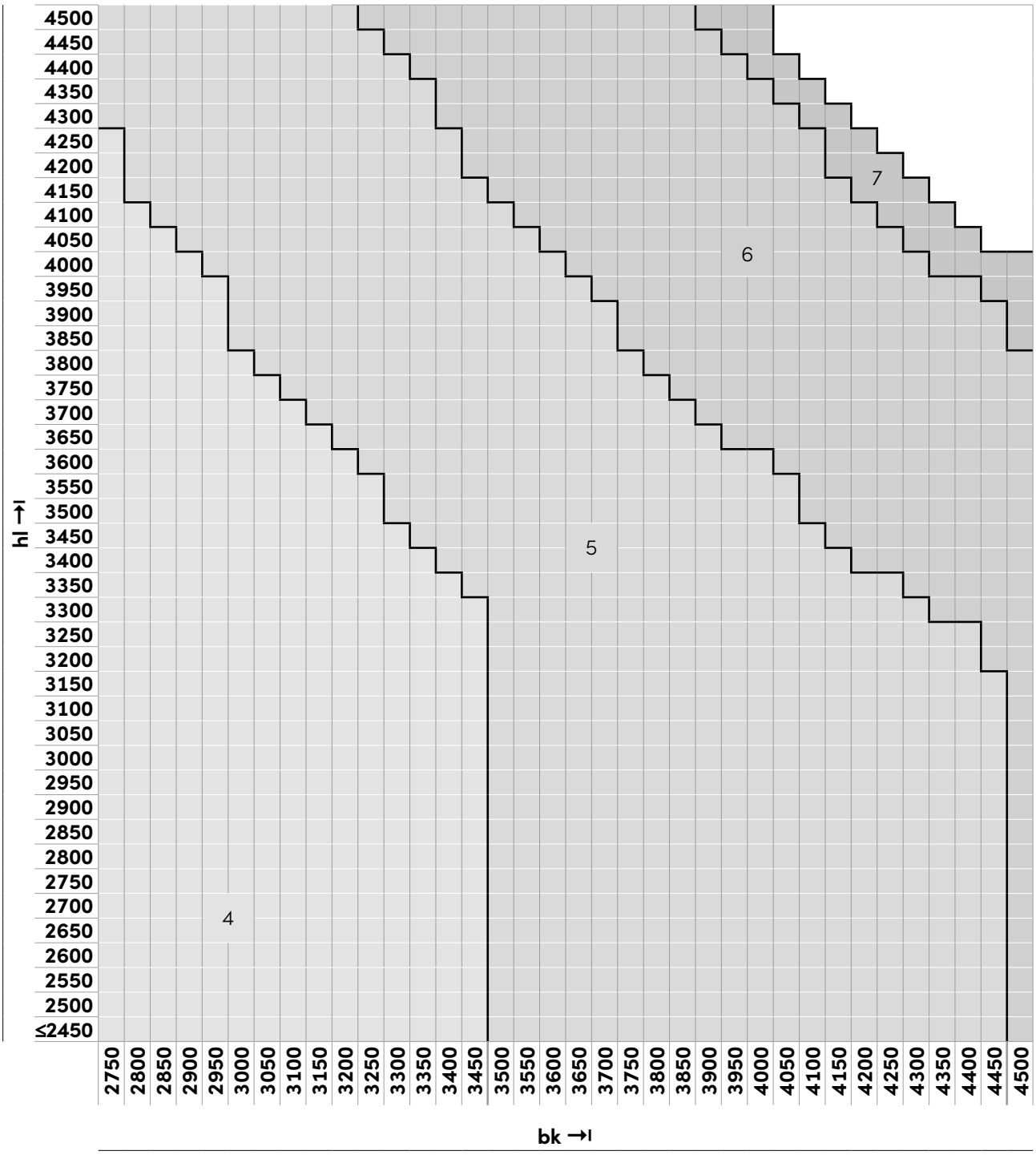

Vertical connections | Standard motor position

Number of bearings

Solomatic® II 80 System

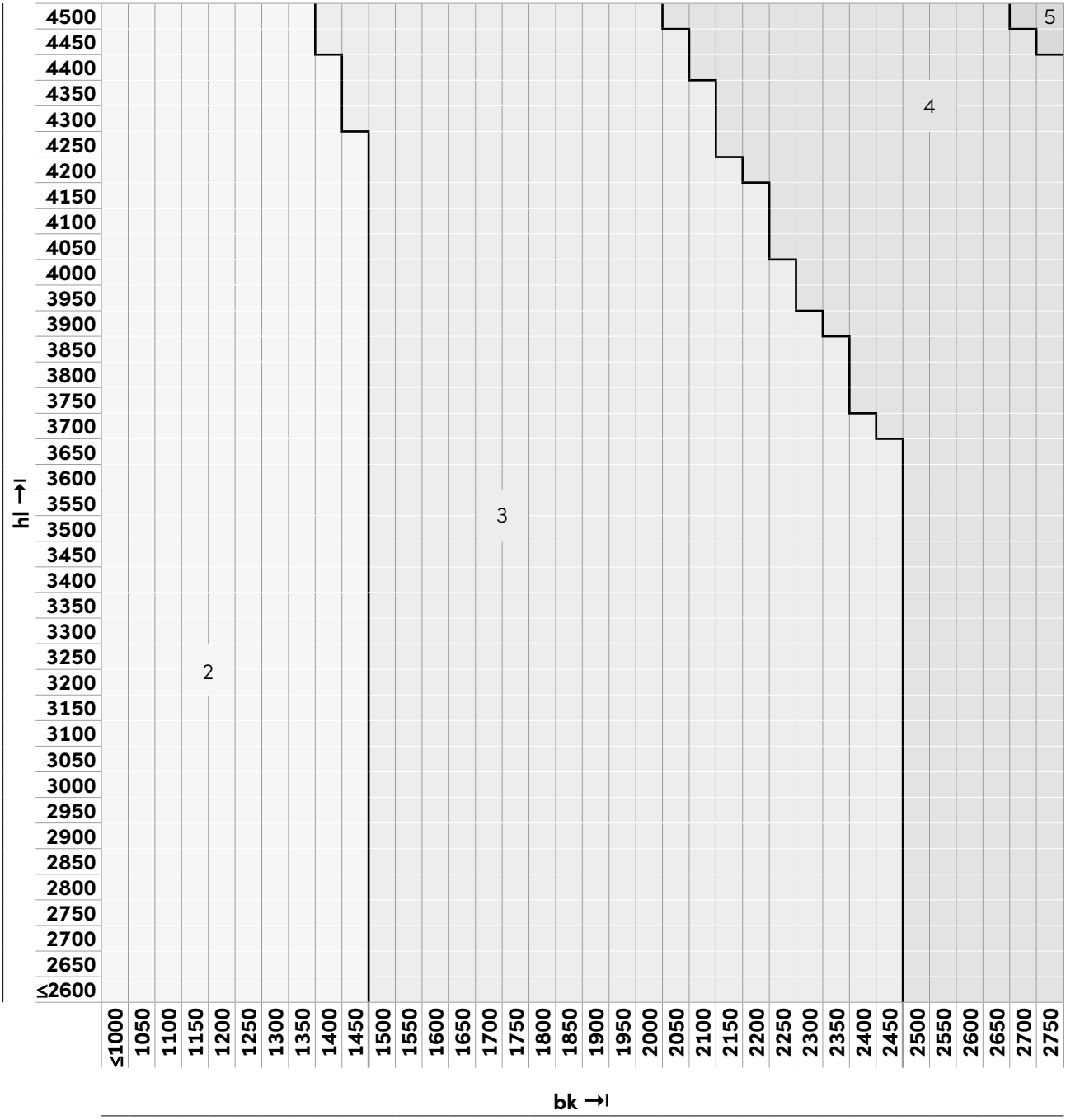

Standard motor position 311

Vertical connections | Standard motor position

Number of bearings

Solomatic® II 80 System



Vertical connections | Standard motor position

Standard motor position

Number of bearings	Standard motor position
2	
3	
4	
5	
6	
7	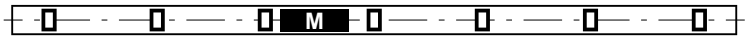

Bearing

M Standard motor position

Guide rail installation (principle)

Guides attached (to soffit) | Type A

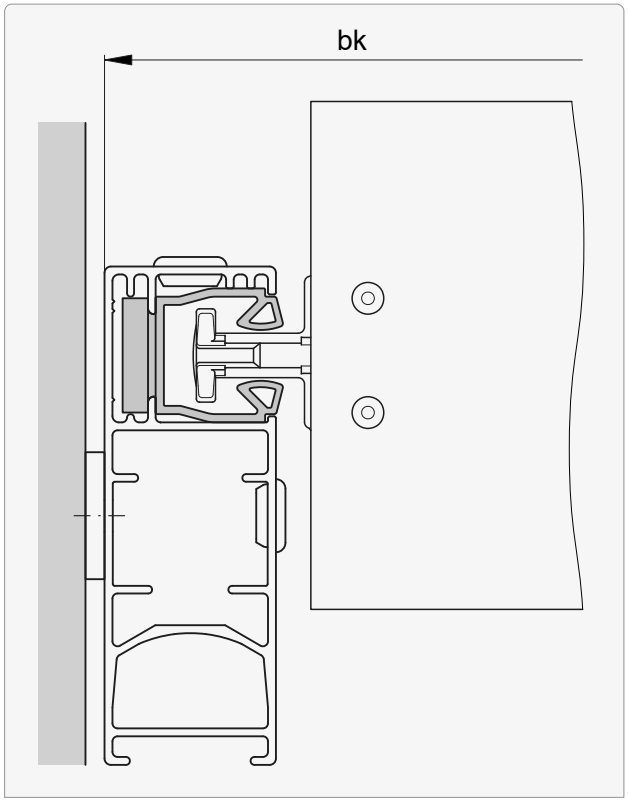

Observe possible guide rail spacer for **bk**.
Standard: 3 mm

Guide rail fastenings (principle)

Overview

Type														
A	B	Bd	C	Cd	E	F	G	H	Kv	M	T	Tv	V	Wv
●	–	–	–	–	–	–	●	–	–	–	–	–	–	–

● applicable without restrictions

A Soffit installation

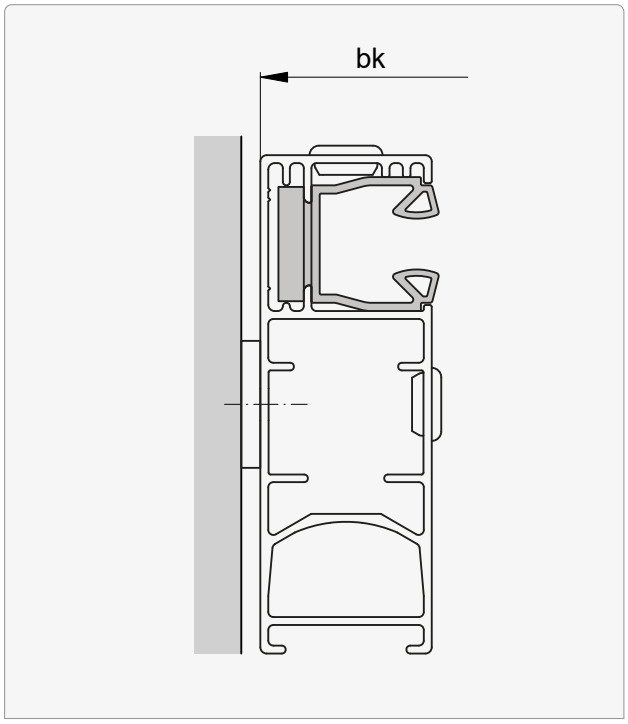

Transverse and holding force per fastening point at least 3500 N.

Observe possible guide rail spacer for **bk**.
Standard: 3 mm

G Facade installation

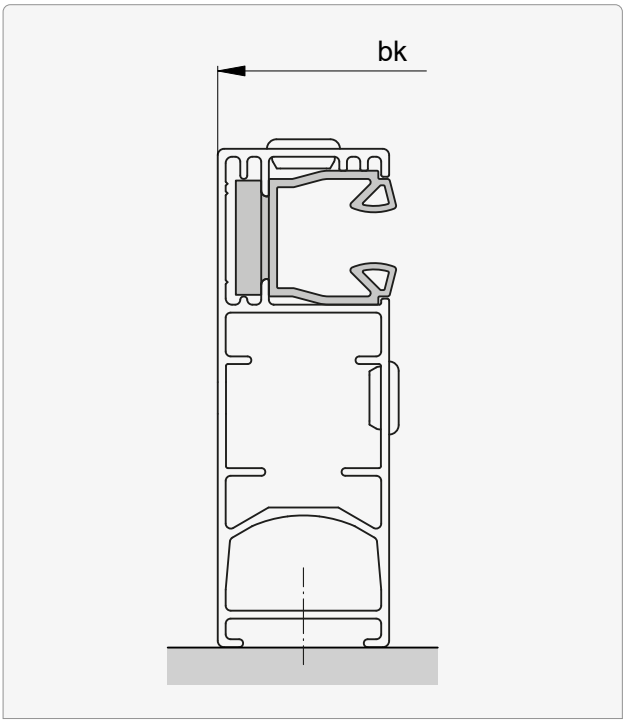

Transverse and holding force per fastening point at least 5500 N.

Guide extension and facet

Extension

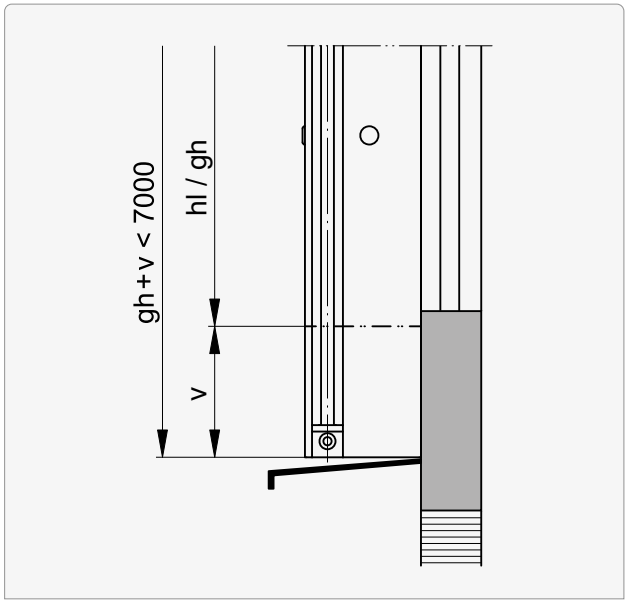

v
–20 ... 1000

Facet

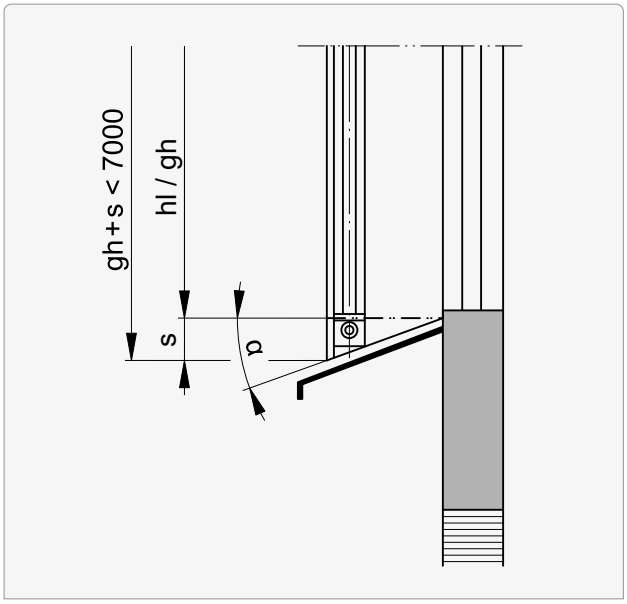

α
5 ... 50°

Extension and facet

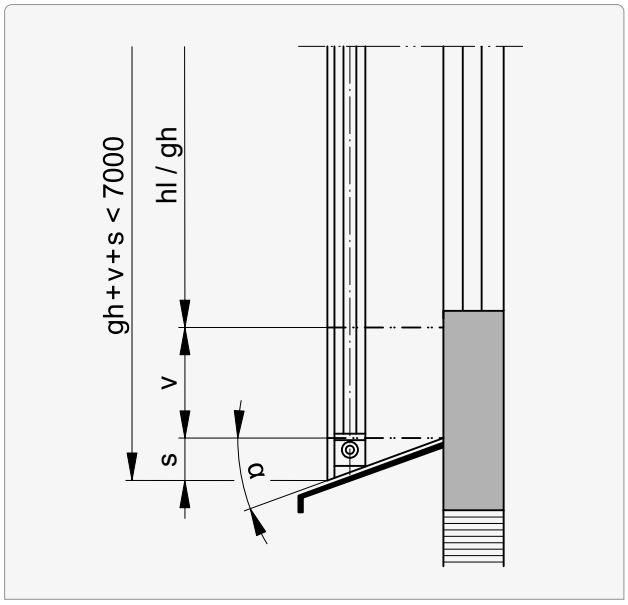

v	α
0 ... 1000	5 ... 50°

Value for **s** **315**

Angling at the guides

Type P | Solomatic® II System Profil

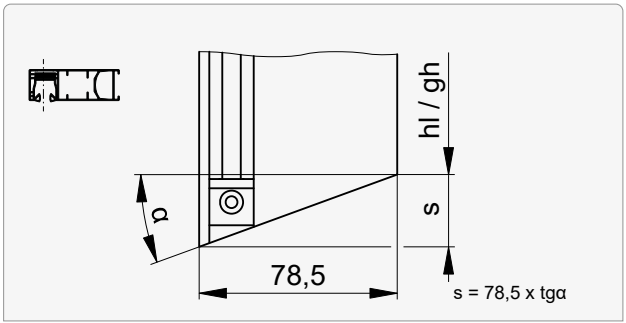

α	s	α	s	α	s	α	s	α	s
5	7	**15**	21	**25**	37	**35**	55	**45**	79
6	8	**16**	23	**26**	38	**36**	57	**46**	81
7	10	**17**	24	**27**	40	**37**	59	**47**	84
8	11	**18**	26	**28**	42	**38**	61	**48**	87
9	12	**19**	27	**29**	44	**39**	64	**49**	90
10	14	**20**	29	**30**	45	**40**	66	**50**	94
11	15	**21**	30	**31**	47	**41**	68		
12	17	**22**	32	**32**	49	**42**	71		
13	18	**23**	33	**33**	51	**43**	73		
14	20	**24**	35	**34**	53	**44**	76		

Type K | Solomatic® II 70 System Box

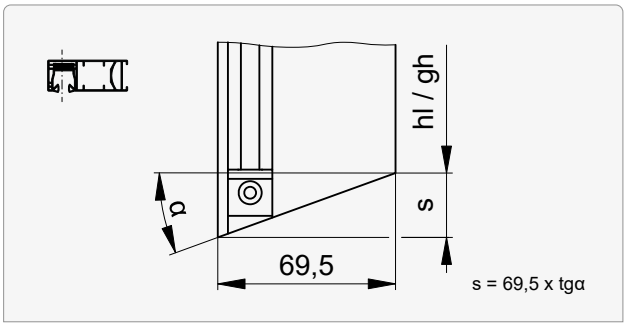

α	s	α	s	α	s	α	s	α	s
5	6	**15**	19	**25**	32	**35**	49	**45**	70
6	7	**16**	20	**26**	34	**36**	50	**46**	72
7	9	**17**	21	**27**	35	**37**	52	**47**	75
8	10	**18**	23	**28**	37	**38**	54	**48**	77
9	11	**19**	24	**29**	39	**39**	56	**49**	80
10	12	**20**	25	**30**	40	**40**	58	**50**	83
11	14	**21**	27	**31**	42	**41**	60		
12	15	**22**	28	**32**	43	**42**	63		
13	16	**23**	30	**33**	45	**43**	65		
14	17	**24**	31	**34**	47	**44**	67		

Type B | Solomatic® II 80 System Box

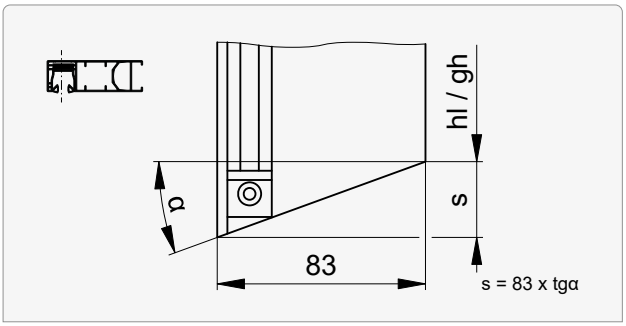

α	s	α	s	α	s	α	s	α	s
5	7	**15**	22	**25**	39	**35**	58	**45**	83
6	9	**16**	24	**26**	40	**36**	60	**46**	86
7	10	**17**	25	**27**	42	**37**	63	**47**	89
8	12	**18**	27	**28**	44	**38**	65	**48**	92
9	13	**19**	29	**29**	46	**39**	67	**49**	95
10	15	**20**	30	**30**	48	**40**	70	**50**	99
11	16	**21**	32	**31**	50	**41**	72		
12	18	**22**	34	**32**	52	**42**	75		
13	19	**23**	35	**33**	54	**43**	77		
14	21	**24**	37	**34**	56	**44**	80		

Guide rail end for window sill installation

FA Guide end

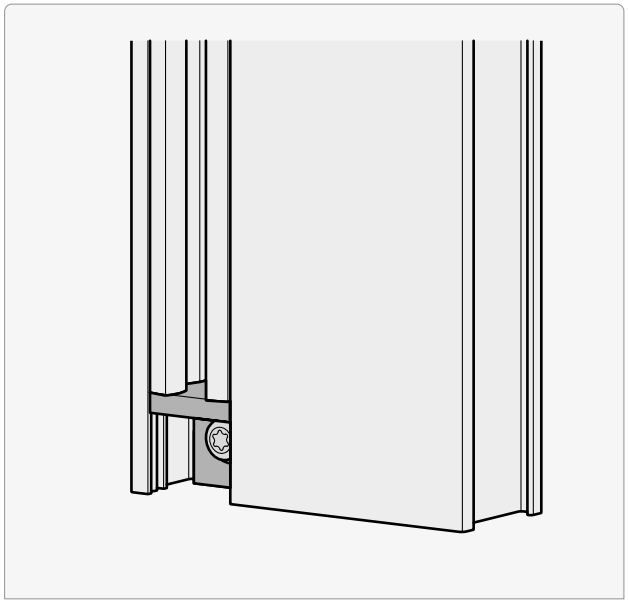

Guide type		
B	**K**	**P**
●	●	●

Guide rail end for suspended guide rails

SFA Safety guide end

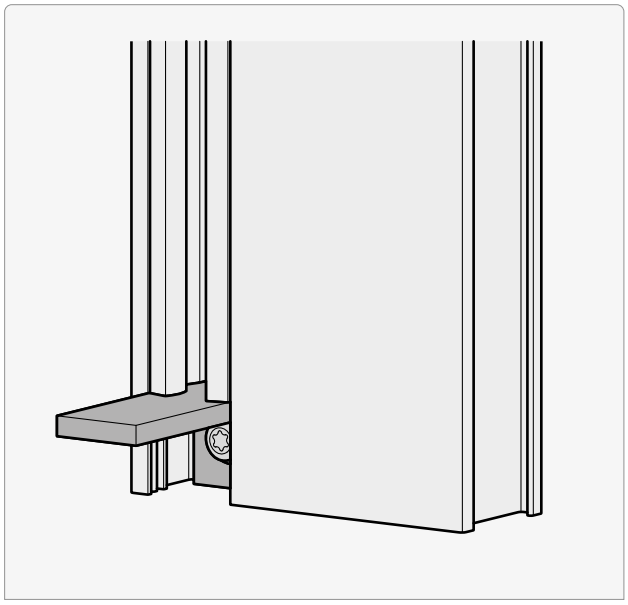

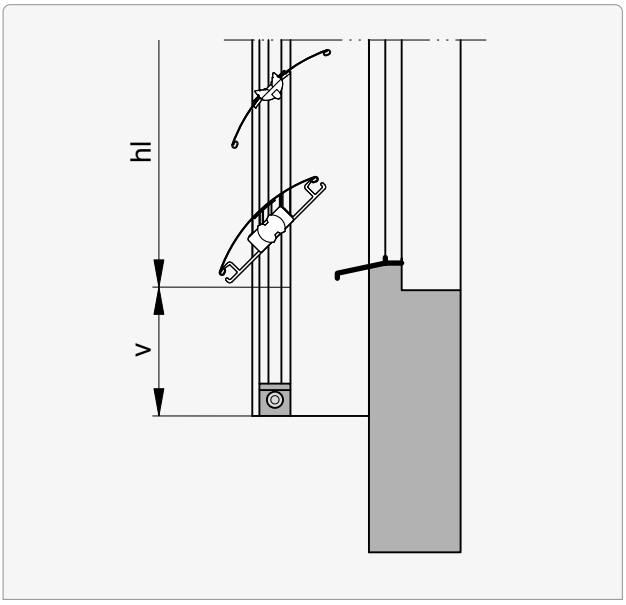

Guide type		
B	**K**	**P**
●	●	●

v
≥ 25

Fastening points Solomatic® II System Profil

Transverse and holding force per fastening point at least 300 N.

Without guide rail extension

hl	**AS** min.
≤ 1500	2
1501 ... 2700	3
2701 ... 3900	4
3901 ... 5100	5
> 5100	6

Regular

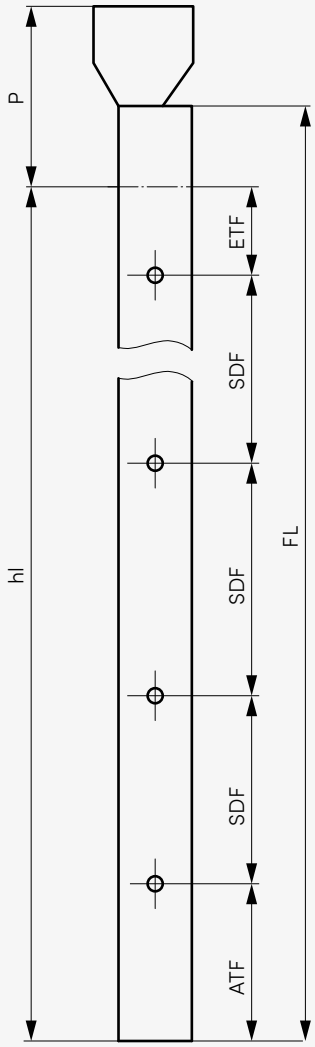

Irregular

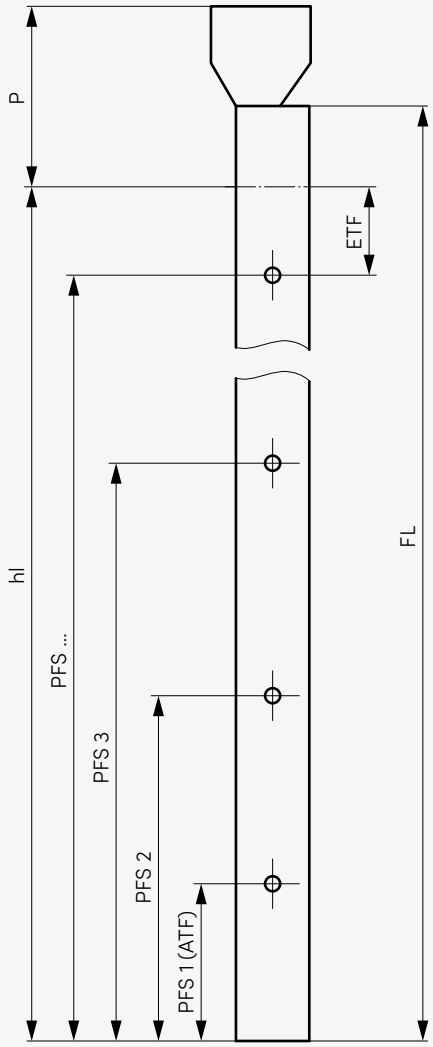

AS Number of slits
ATF Initial spacing guide rail (standard 200)
ETF Endspacing guide rail (standard 100)
FL Guide length
PFS Slot position
SDF Slot distance guide rail: 100 ... 1200

Guide rail fastenings **313**

Fastening points Solomatic® II System Profil

Transverse and holding force per fastening point at least 300 N.

With guide rail extension

Z	AS min.
≤ 1500	2
1501 ... 2700	3
2701 ... 3900	4
3901 ... 5100	5
> 5100	6

Regular

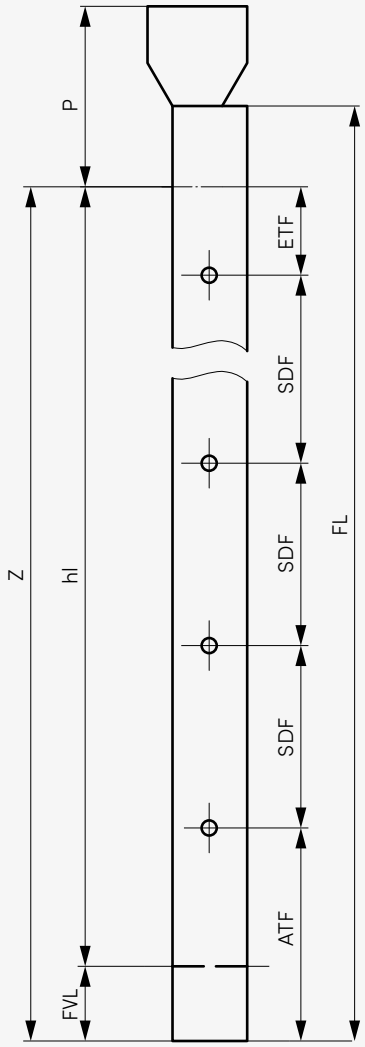

Irregular

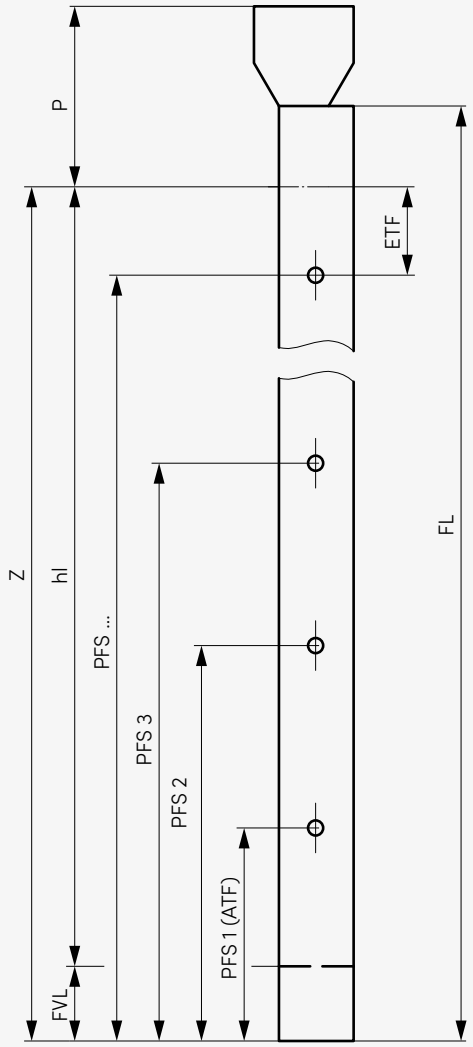

AS Number of slits
ATF Initial spacing guide rail (standard 200)
ETF Endspacing guide rail (standard 100)
FL Guide length
FVL Guide rail extension
PFS Slot position
SDF Slot distance guide rail: 100 ... 1200

Guide extension and facet 314
Guide rail fastenings 313

Fastening points Solomatic® II System Profil

Transverse and holding force per fastening point at least 300 N.

Without guide rail extension, with facet

Z	AS min.
≤ 1500	2
1501 ... 2700	3
2701 ... 3900	4
3901 ... 5100	5
> 5100	6

Regular

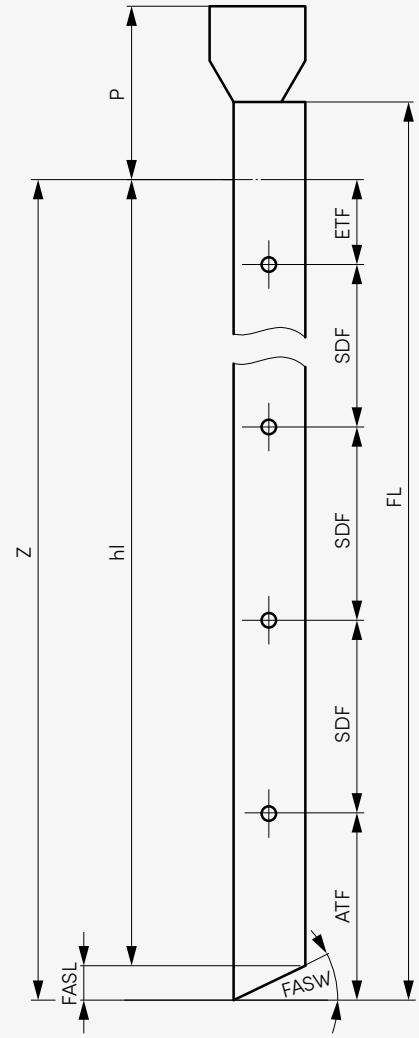

Irregular

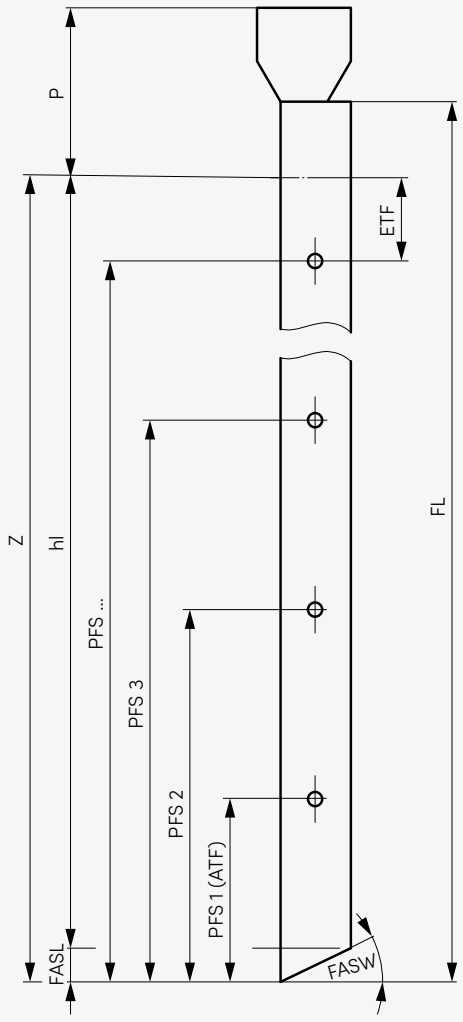

AS Number of slits
ATF Initial spacing guide rail (standard 200)
ETF Endspacing guide rail (standard 100)
FASL Guide rail facet length
FASW Guide rail facet angle
FL Guide length
PFS Slot position
SDF Slot distance guide rail: 100 ... 1200

Guide extension and facet 314
Guide rail fastenings 313

Fastening points Solomatic® II System Profil

Transverse and holding force per fastening point at least 300 N.

With guide rail extension and facet

Z	AS min.
≤ 1500	2
1501 ... 2700	3
2701 ... 3900	4
3901 ... 5100	5
> 5100	6

Regular

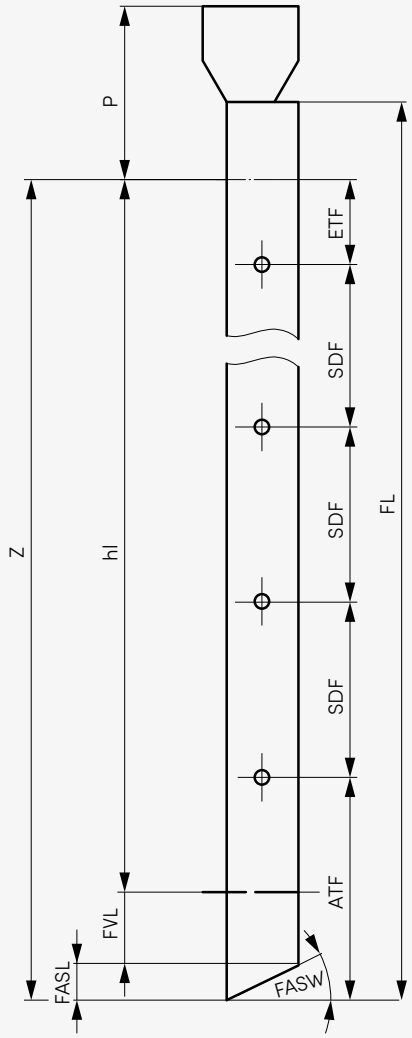

Irregular

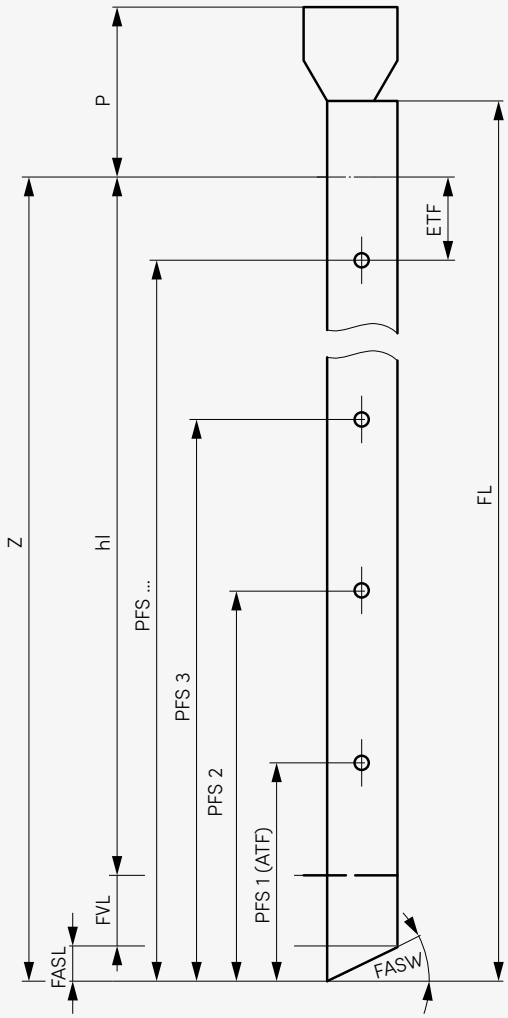

AS Number of slits
ATF Initial spacing guide rail (standard 200)
ETF Endspacing guide rail (standard 100)
FASL Guide rail facet length
FASW Guide rail facet angle

FL Guide length
FVL Guide rail extension
PFS Slot position
SDF Slot distance guide rail: 100 ... 1200

Guide extension and facet 314

Guide rail fastenings 313

Fastening points Solomatic® II System Box

Transverse and holding force per fastening point at least 300 N.

Without guide rail extension

hl	**AS** min.
≤ 1450	2
1451 ... 2450	3
2451 ... 3450	4
> 3450	5

Regular

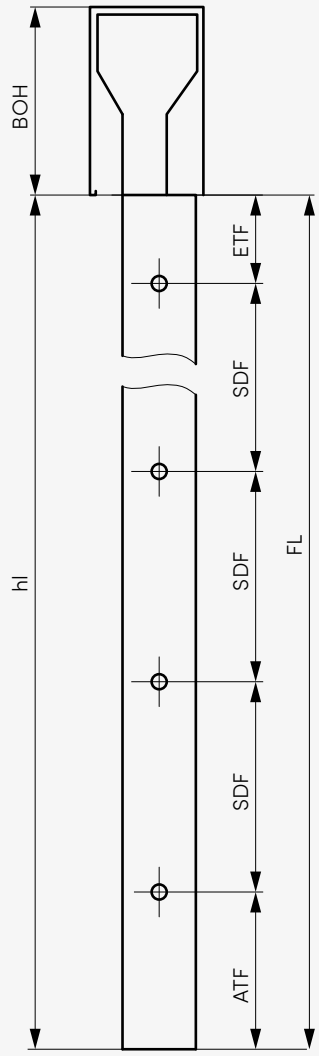

Irregular

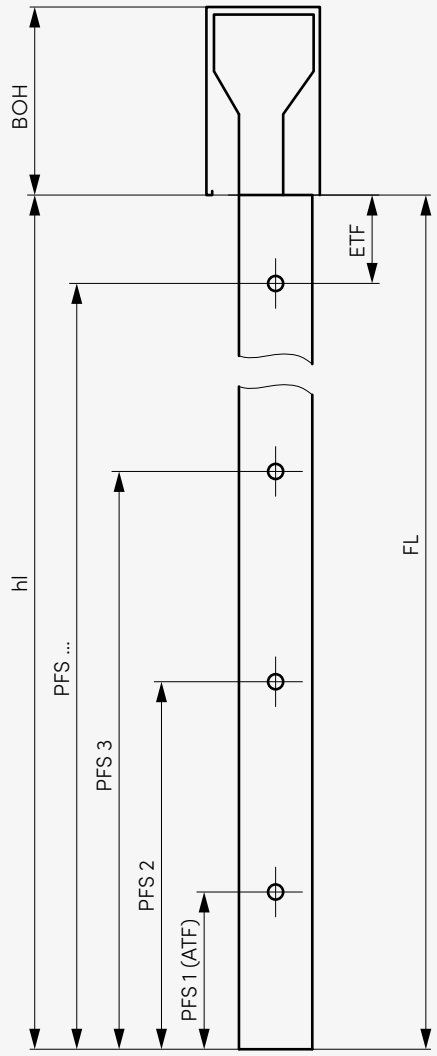

AS Number of slits
ATF Initial spacing guide rail (standard 200)
BOH Box height
ETF Endspacing guide rail (standard 100)
FL Guide length
PFS Slot position
SDF Slot distance guide rail: 100 ... 1200

Guide rail fastenings **313**

Fastening points Solomatic® II System Box

Transverse and holding force per fastening point at least 300 N.

With guide rail extension

Z	AS min.
≤ 1450	2
1451 ... 2450	3
2451 ... 3450	4
> 3450	5

Regular

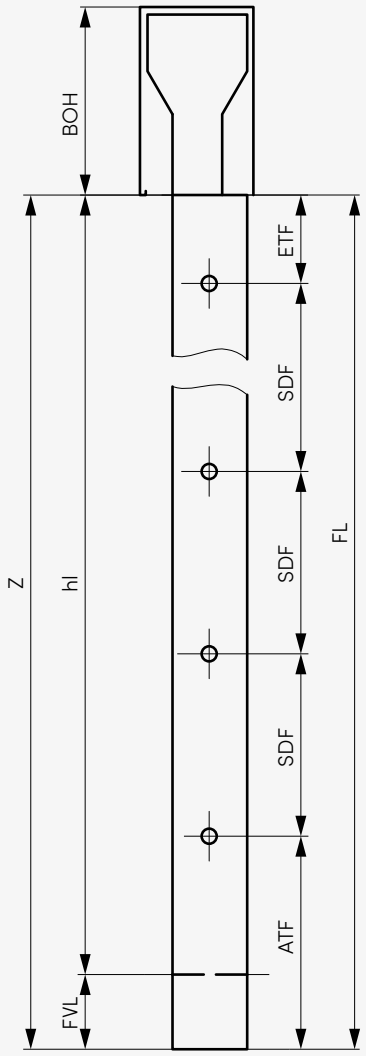

Irregular

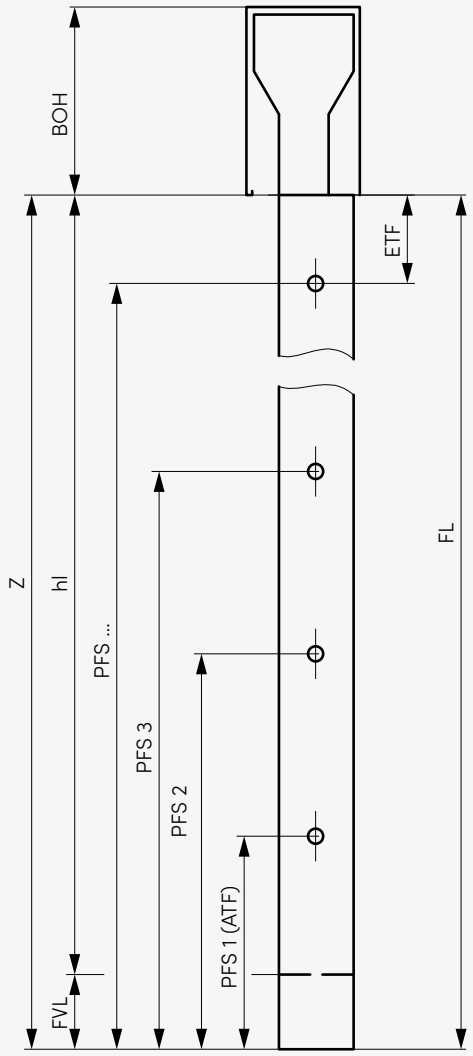

AS Number of slits
ATF Initial spacing guide rail (standard 200)
BOH Box height
ETF Endspacing guide rail (standard 100)
FL Guide length
FVL Guide rail extension
PFS Slot position
SDF Slot distance guide rail: 100 ... 1200

Guide extension and facet 314
Guide rail fastenings 313

Fastening points Solomatic® II System Box

Transverse and holding force per fastening point at least 300 N.

Without guide rail extension, with facet

Z	AS min.
≤ 1450	2
1451 ... 2450	3
2451 ... 3450	4
> 3450	5

Regular

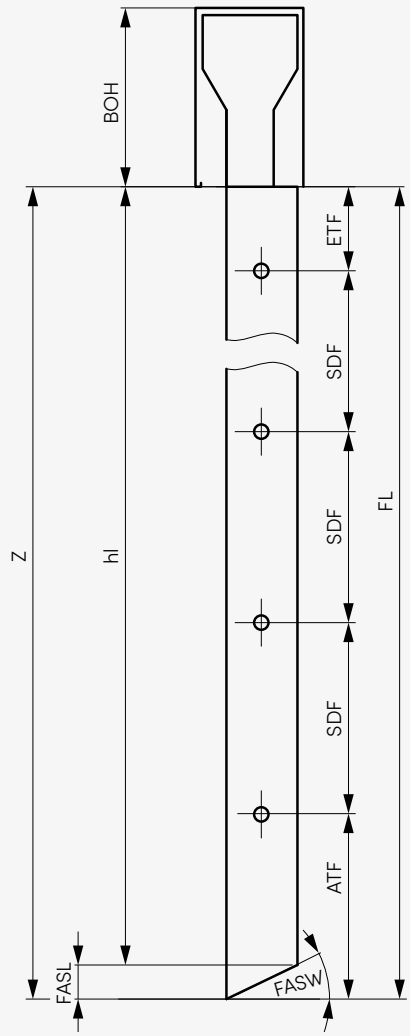

Irregular

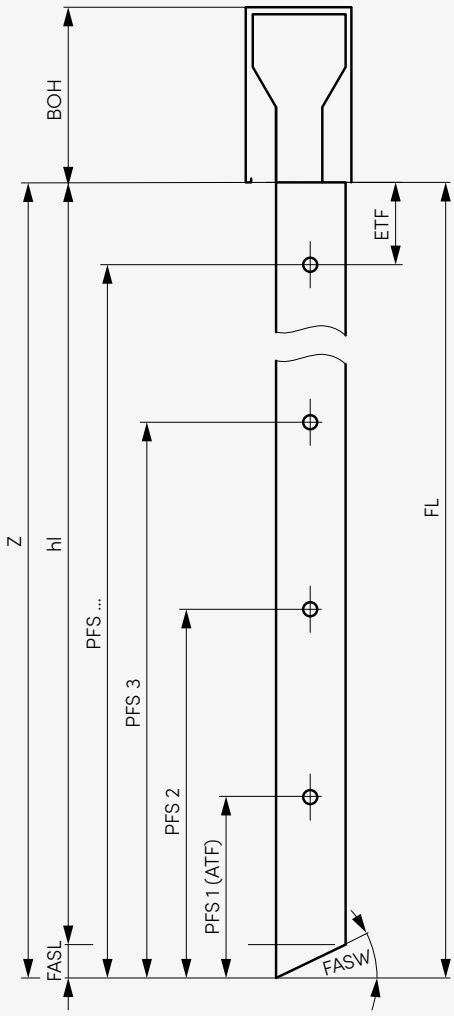

AS Number of slits
ATF Initial spacing guide rail (standard 200)
BOH Box height
ETF Endspacing guide rail (standard 100)
FASL Guide rail facet length
FASW Guide rail facet angle
FL Guide length
PFS Slot position
SDF Slot distance guide rail: 100 ... 1200

Guide extension and facet 314
Guide rail fastenings 313

Fastening points Solomatic® II System Box

Transverse and holding force per fastening point at least 300 N.

With guide rail extension and facet

Z	AS min.
≤ 1450	2
1451 ... 2450	3
2451 ... 3450	4
> 3450	5

Regular

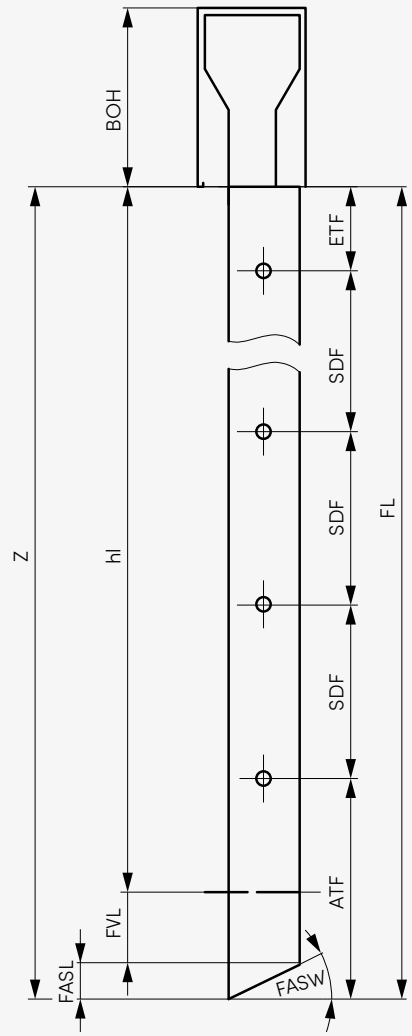

Irregular

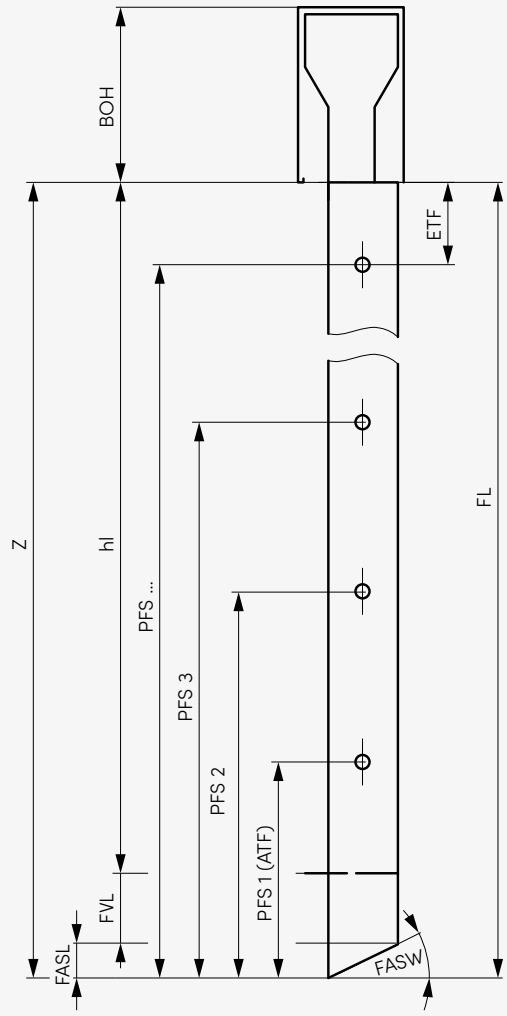

AS Number of slits
ATF Initial spacing guide rail (standard 200)
BOH Box height
ETF Endspacing guide rail (standard 100)
FASL Guide rail facet length
FASW Guide rail facet angle
FL Guide length
FVL Guide rail extension
PFS Slot position
SDF Slot distance guide rail: 100 ... 1200

Guide extension and facet 314
Guide rail fastenings 313

Technical data of motors

Performance characteristics

Type		Limit switch Type	Number of	M [Nm]	n [1/min.]	P [W]	I [A]
Standard							
Elero							
ES...	06.01	mechanical	2	6	26	110	0.50
	09.01			9		170	0.75
E0...	20.01			20		190	1.05
ES...	06.51	mechanical	3	6	26	110	0.50
	09.51			9		170	0.75
E0...	20.51			20		190	1.05
Option							
Somfy							
SH...	06.01	mechanical	2	6	24	95	0.40
	10.01			10		110	0.65
	18.01			18		155	1.00
SW...	06.01	electronic	2	6	24	95	0.40
SI...	10.01			10		110	0.65
SR...	18.01			18		155	1.00
Elero Comfort							
ECM...	06.01	electronic	2	6	26	115	0.50
	09.01			9		156	0.68
	06.51		3	6		115	0.50
	09.51			9		156	0.68
ECB...	06.01	electronic	2	6	26	115	0.50
	09.01			9		156	0.68
	06.51		3	6		115	0.50
	09.51			9		156	0.68

I Current consumption
M Torque
n Rotational speed
P Power consumption

Annex

Definitions of dimensions **327**
Installation base **330**

Definitions of dimensions

Dimensions should always be viewed **from inside to outside**.
Unspecified dimensions are **defined by the products**.
Situations designed with **uniform guide profiles**.

bk

For rail guide

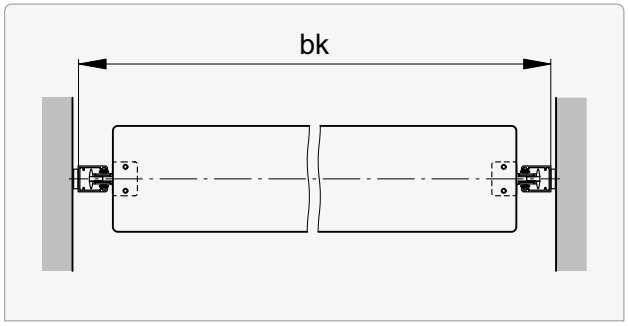

For cable guide

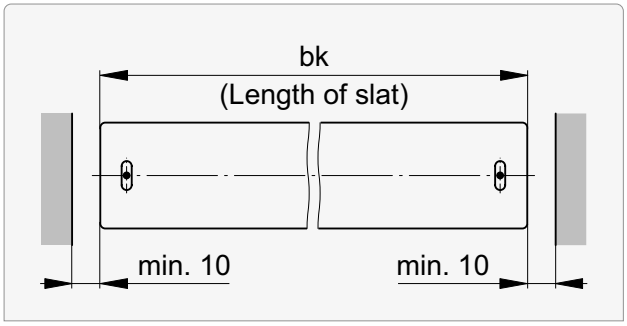

System width (Connected Systems)

For rail guide

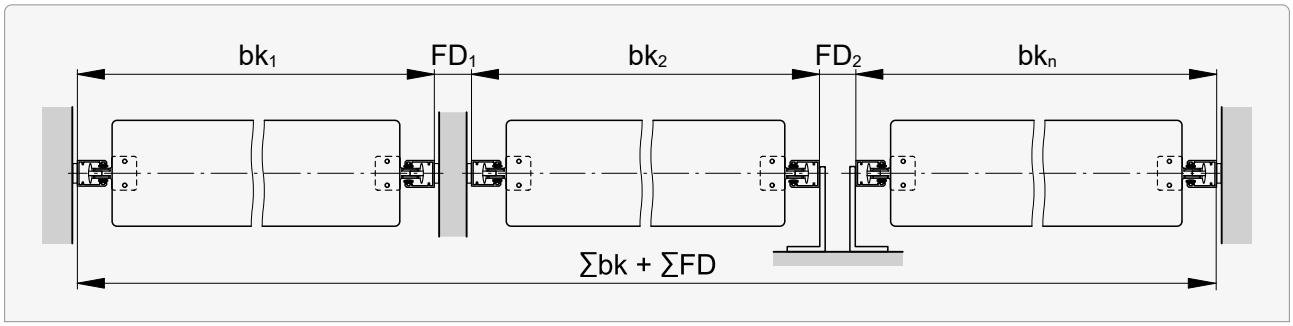

For cable guide

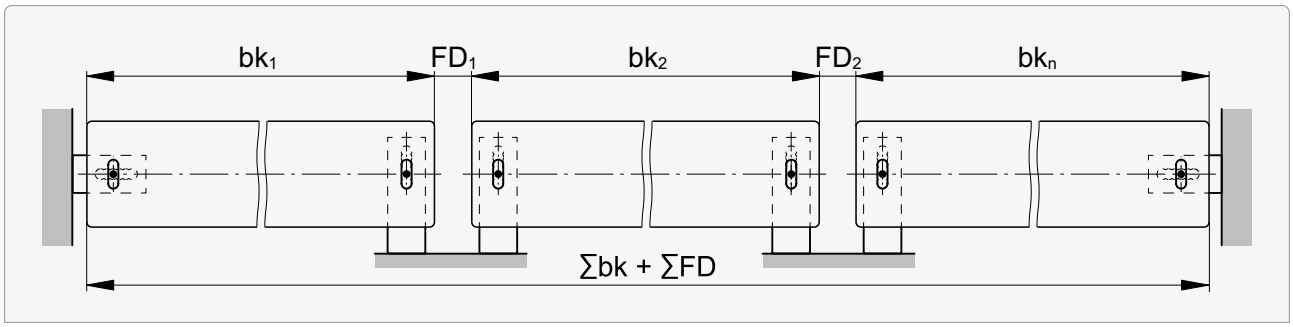

bk Construction width
FD Distance between guides

Definitions of dimensions

hl, hs, gh, p

For rail guide

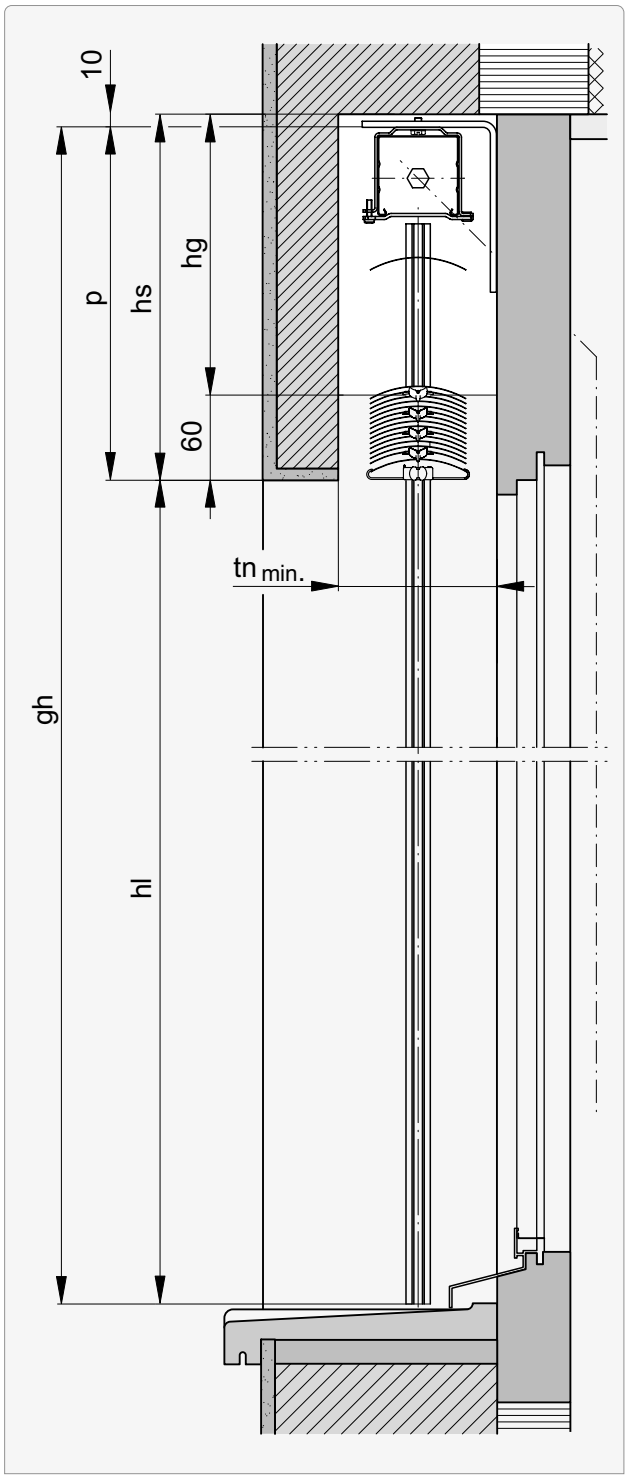

hl, **gh** at bottom: Bottom edge of guide rail

For cable guide

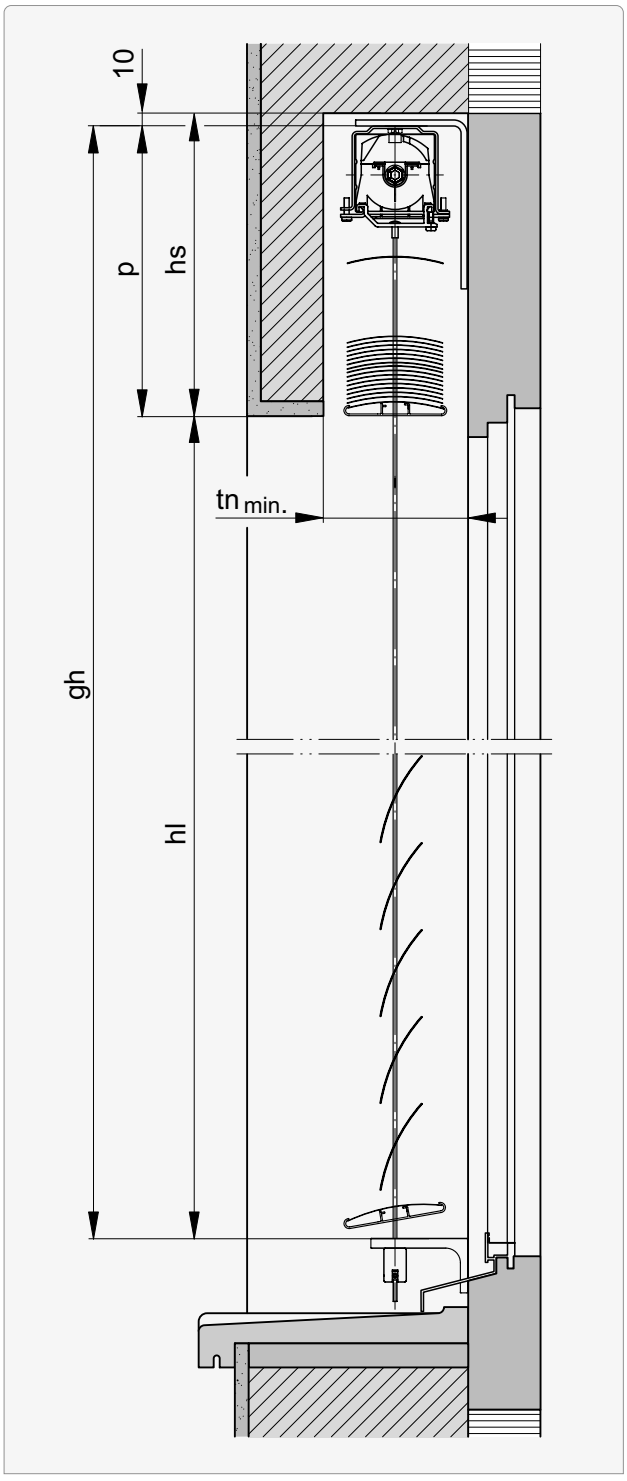

hl, **gh** at bottom: Top edge of cable fastening

gh Overall height (**hl + p**)
hg Height of gearbox recess
hl Finished clear height
hs Header height
p Height of package
tn Niche depth

Definitions of dimensions

Distance between guides FD

For rail guide

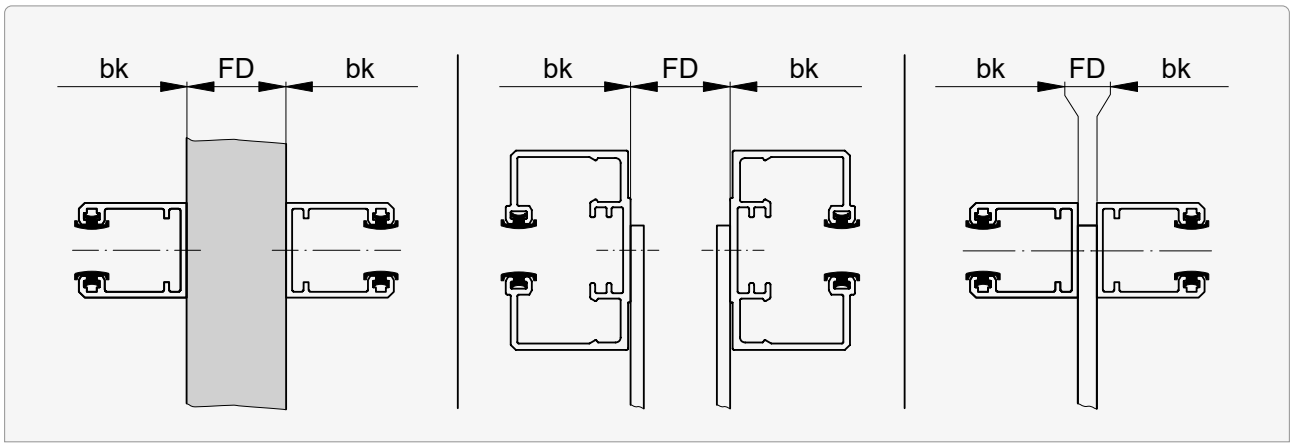

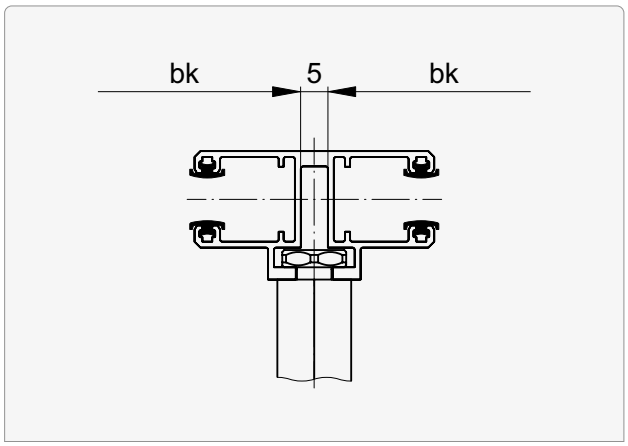

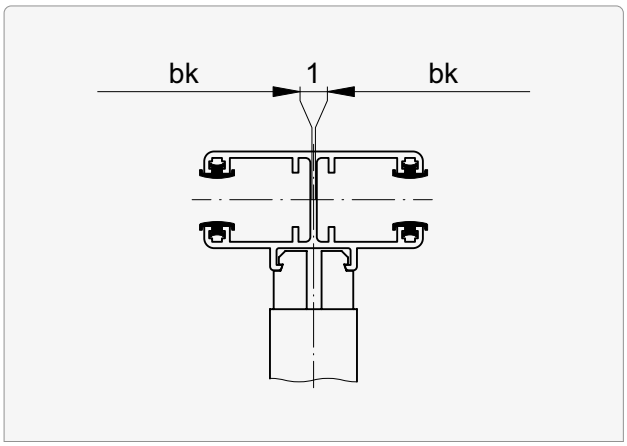

FD Rear edge of guide rails

For cable guide

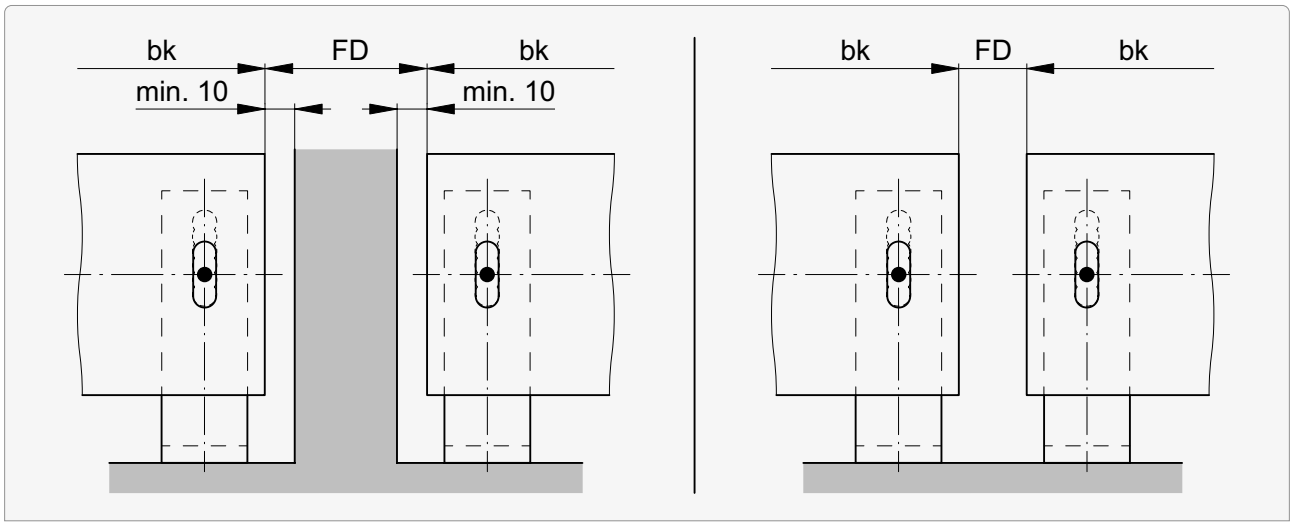

FD Slat end – slat end

For blinds situated directly next to each other: horizontal distance between the slats: **min. 15**

Installation base

1 Wood
2 Stone
3 Metal, Aluminum >4 mm, Steel >3 mm
4 Sheet metal, Aluminum 2 ... 4 mm, Steel 2 ... 3 mm
5 External insulation*
6 Plastic
7 Chipboard
8 Aerated concrete
10 Concrete
13 Eternit
14 Built-in plate
15 Sheet metal Al | Cu 2 ... 4 mm
16 Insulation EPS 150

* Insulation d: 5 ... 110 mm

Index

A

Additional cables
- Aluflex®
  - cable guide 224
  - guide rail 195
- Solomatic® II
  - cable guide 286

Aluflex® 172

AT
- Aluflex® 183
- Grinotex® III | Grinotex® III Sinus 36
- Lamisol® III 78
- Lamisol® III System 122
- Lamisol® III Vento 151
- Solomatic® II 244
- Solomatic® II System 302

B

Beginning distance ▸ AT

bk (definition) 327

Box base profile
- Aluflex® 187
- Solomatic® II 248

Box extensions
- Aluflex® 180

Box fastening
- Aluflex® 187
- Solomatic® II 248

Box supports, number of
- Aluflex® 186
- Grinotex® III | Grinotex® III Sinus 39
- Lamisol® III 81
- Lamisol® III Vento 154
- Solomatic® II 247

C

Cable fastenings
- Aluflex® 228
- Solomatic® II 292

Cable outlet
- Lamisol® III System 123
- Solomatic® II System 303

Connected systems
- Aluflex®
  - cable guide 230
  - guide rail 219
- Grinotex® III | Grinotex® III Sinus 68
- Lamisol® III 113
- Metalunic® V | Metalunic® V Sinus 27
- Solomatic® II
  - cable guide 294
  - guide rail 281

Construction width (definition) ▸ bk (definition)

D

d – dimension
- Aluflex® 191
- Grinotex® III | Grinotex® III Sinus 42
- Lamisol® III 84
- Lamisol® III Vento 157
- Metalunic® V | Metalunic® V Sinus 10
- Solomatic® II 251

Darkening
- Grinotex® III 40
- Metalunic® V 8

Darkening profile
- Metalunic® V 8

Definitions of dimensions 327

Distance between guides ▸ FD

Distance between guides (definition) ▸ FD (definition)

Double lip-seal
- Grinotex® III 40

E

End rails
- Aluflex® 182
- Grinotex® III | Grinotex® III Sinus 35
- Lamisol® III 77
- Lamisol® III System 121
- Lamisol® III Vento 150
- Solomatic® II 243
- Solomatic® II System 301

F

Fastening points
- Aluflex® 217
- Grinotex® III | Grinotex® III Sinus 63
- Lamisol® III 109
- Lamisol® III System 137
- Lamisol® III Vento 167
- Metalunic® V | Metalunic® V Sinus 23

Solomatic® II 277
Solomatic® II System 317

FD

Aluflex®
cable guide 230
guide rail 219
Grinotex® III | Grinotex® III Sinus 68
Lamisol® III 113
Metalunic® V | Metalunic® V Sinus 27
Solomatic® II
cable guide 294
guide rail 281

FD (definition) 329

Finished clear height (definition) ▸ hl (definition)

G

gh (definition) 328

Grinotex® III | Grinotex® III Sinus 30

Guide extension

Aluflex® 209
Grinotex® III | Grinotex® III Sinus 57
Lamisol® III 102
Lamisol® III System 134
Lamisol® III Vento 165
Metalunic® V | Metalunic® V Sinus 20
Solomatic® II 270
Solomatic® II System 314

Guide facet

Aluflex® 209
Grinotex® III | Grinotex® III Sinus 57
Lamisol® III 102
Lamisol® III System 134
Metalunic® V | Metalunic® V Sinus 20
Solomatic® II 270
Solomatic® II System 314

Guide rails

Aluflex® 190
Grinotex® III | Grinotex® III Sinus 41
Lamisol® III 83
Lamisol® III System 124
Lamisol® III Vento 156
Metalunic® V | Metalunic® V Sinus 9
Solomatic® II 250
Solomatic® II System 304

Guide rail cut-outs in windowsill area

Aluflex® 212
Grinotex® III | Grinotex® III Sinus 58
Lamisol® III 105
Metalunic® V | Metalunic® V Sinus 21
Solomatic® II 273

Guide rail end for suspended guide rails

Aluflex® 216
Lamisol® III 107
Solomatic® II 275

Guide rail fastenings (principle)

Aluflex® 201
Grinotex® III | Grinotex® III Sinus 51
Lamisol® III 94
Lamisol® III System 133
Lamisol® III Vento 162
Metalunic® V | Metalunic® V Sinus 14
Solomatic® II 262
Solomatic® II System 313

Guide rail installation (principle)

Aluflex® 199
Grinotex® III | Grinotex® III Sinus 49
Lamisol® III 92
Lamisol® III System 132
Lamisol® III Vento 160
Metalunic® V | Metalunic® V Sinus 12
Solomatic® II 260
Solomatic® II System 312

H

Header dimensions

Aluflex® 181
Grinotex® III | Grinotex® III Sinus 33 | 34
Lamisol® III 76
Lamisol® III System 120
Lamisol® III Vento 149
Metalunic® V | Metalunic® V Sinus 6
Solomatic® II 241
Solomatic® II System 300

Header height (definition) ▸ hs (definition)

Height of gearbox recess (definition) ▸ hg (definition)

Height of package ▸ Header dimensions

Height of package (definition) ▸ p (definition)

hg (definition) 328

hl (definition) 328

Housing fastening

Aluflex® 184
Grinotex® III | Grinotex® III Sinus 37
Lamisol® III 79
Lamisol® III Vento 152

Solomatic® II 245

hs ▸ Header dimensions

hs (definition) 328

I

Installation base 330

Installation window

Aluflex® 213
Grinotex® III | Grinotex® III Sinus 62
Lamisol® III 108
Lamisol® III Vento 166
Solomatic® II 276

L

Lamisol® III 71

Lamisol® III System 116

Lamisol® III Vento 146

Limit dimensions

Aluflex® 174
Grinotex® III | Grinotex® III Sinus 31
Lamisol® III 72
Lamisol® III System 117
Lamisol® III Vento 147
Metalunic® V | Metalunic® V Sinus 4
Solomatic® II 234
Solomatic® II System 300

M

MBMA

Aluflex®
cable guide 223
guide rail 194
Grinotex® III | Grinotex® III Sinus 43
Lamisol® III 86
Metalunic® V | Metalunic® V Sinus 11
Solomatic® II
cable guide 285
guide rail 254

Metalunic® V | Metalunic® V Sinus 3

O

Opening for connected blinds

Aluflex®
cable guide 231
guide rail 220
Grinotex® III | Grinotex® III Sinus 69
Lamisol® III 114
Metalunic® V | Metalunic® V Sinus 28
Solomatic® II
cable guide 295
guide rail 282

Overall height (definition) ▸ gh (definition)

P

p (definition) 328

Package projection box

Aluflex® 180

R

Reflect

Lamisol® III 82
Lamisol® III Vento 155

S

SD

Aluflex® 183
Grinotex® III | Grinotex® III Sinus 36
Lamisol® III 78
Lamisol® III System 122
Lamisol® III Vento 151
Solomatic® II 244
Solomatic® II System 302

Sections for crank drive ▸ MBMA

Slat profiles

Aluflex® 182
Grinotex® III | Grinotex® III Sinus 35
Lamisol® III 77
Lamisol® III System 121
Lamisol® III Vento 150
Metalunic® V | Metalunic® V Sinus 7
Solomatic® II 243
Solomatic® II System 301

Slot spacing ▸ SD

Solomatic® II 232

Solomatic® II System 296

Standard motor position
Aluflex®
cable guide 225
guide rail 196
Grinotex® III | Grinotex® III Sinus 44
Lamisol® III 87
Lamisol® III System 127
Lamisol® III Vento 158
Solomatic® II
cable guide 287
guide rail 255
Solomatic® II System 307
System width (definition) 327

T

Technical data of motors
Aluflex® 188
Grinotex® III | Grinotex® III Sinus 70
Lamisol® III 115
Lamisol® III System 145
Lamisol® III Vento 171
Metalunic® V | Metalunic® V Sinus 29
Solomatic® II 249
Solomatic® II System 325
tn ▸ Header dimensions
tn (definition) 328

V

Vertical connections
Aluflex®
cable guide 225
guide rail 196
Grinotex® III | Grinotex® III Sinus 44
Lamisol® III 87
Lamisol® III System 127
Lamisol® III Vento 158
Solomatic® II
cable guide 287
guide rail 255
Solomatic® II System 307

Inspired by the **Sun.**

griesser.com

Subject to change without prior notice 20261109 Item no. 185048