GRIESSER

External venetian blinds from Griesser.
Solomatic® II System





Solomatic® II System

Solomatic® II System is a self-supporting, motorized system designed for positioning on window frames with two options for installation. The system comes as a box version for front installation or as a profile version for building into the niche. Guides and box are flush to the rear and sides. Solomatic® II System can be easily planned and measured and, because the curtain is pre-installed, is exceptionally easy to install. Solomatic® II System can be ordered with Solomatic® II 80 curtain or with Solomatic® II 70 curtain for narrow spaces. The operating position makes it possible to prevent the dark phase when the blind is lowered.





Self-supporting



Measure competently – order and install easily

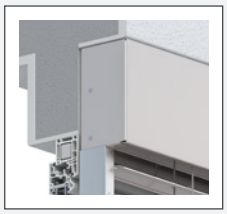

Solomatic® II System Box

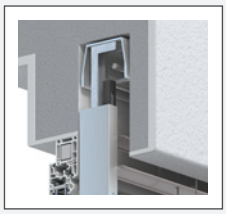

Solomatic® II System Profil



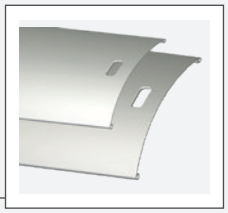

Two different slat widths

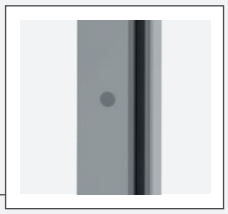

Screw fastened cover (black / white / gray)

Product-Highlights Solomatic® II System



Adjusting cords with Kevlar



Operating position (option)

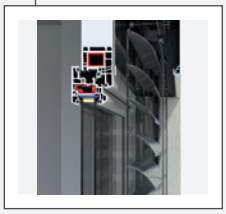

Guides attached to window frames

Product advantages in detail

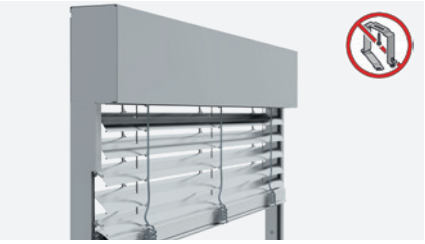

Self-supporting blind system

Solomatic® II System is a self-supporting system and is positioned on the window frame. Mounting holes are available on the side or at the rear for fastening the guides which reduces thermal bridges around the lintel area.



Measure competently – order and install easily

Measurements must be taken such that the product fits completely into the application in width, height and depth because of the compact blind design. This will make it easy to order and quick to install.

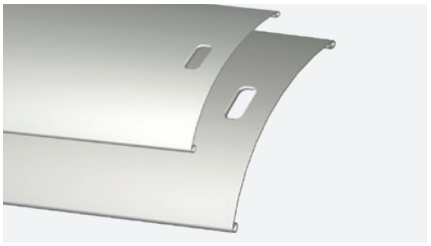

Two slat widths

Solomatic® II 80 meets today's installation conditions in renovations and remodels. Solomatic® II 70 is geared to the tight installation conditions found in renovation and remodeling situations.



Operating position (option)

When a blind is first lowered, there is often a moment of disruption – especially on a work space. The operating position of approximately 48 degrees prevents this dark phase when the blind is lowered.



Adjusting cords with Kevlar

Yellow Kevlar fibers ensure that there is barely any expansion and shrinkage – the blind closure stays perfect for many years.



Solomatic® II System Box

The box inserts smoothly into the facade. No additional fasteners are needed up to a width of 4 m.



Solomatic® II System Profil

Solomatic® II System profil is used for concealed installation in a niche. No additional fasteners are needed up to a width of 4.5 m.

Our color scheme

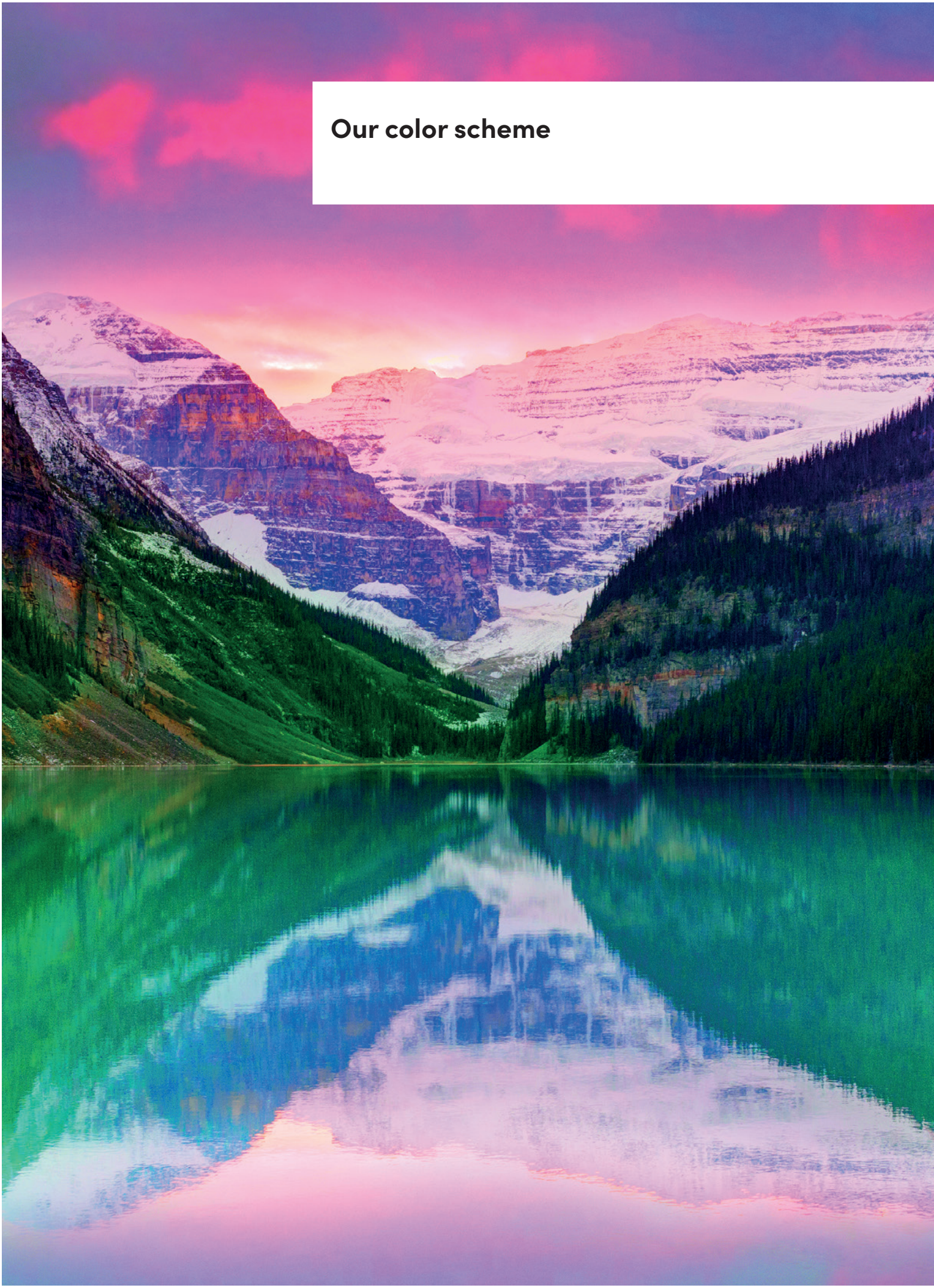

Our colors

Griesser Bestseller Colors

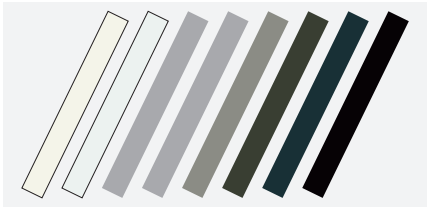

Surface structure
Semi-gloss

RAL 9010 | RAL 9016 | RAL 9006 | VSR 140 - Metallic

RAL 9007/VSR 907 | RAL 7022 | RAL 7016 | RAL 8019

Premium Colors



GriRal Colors

Our GriRal color collection has an assortment of 50 different RAL shades of color. From sand yellow to standard white, we offer a complete selection of hues for every color family. We're convinced that with our color palette, you will find exactly the right shade of color for your needs.



Surface structure
Semi-gloss

GriColors

The GriColors range includes 100 color shades in four collections, Glass & Stone, Sun & Fire, Water & Moss and Earth & Wood – from cool white and sunny red to natural blue and earthy brown.



BiColor

External venetian blinds get a new color accent: When bright color is dominant outside, a neutral light can optimize the shading function inside. Create your own preferred color combination using our two color collections, GriColors and GriRal (excluding standard colors).
The exterior color shows as a border along the edge of the interior view. Our color recommendations for interior colors: white (VSR 901), light gray (VSR 904) or medium gray (VSR 130).

Our comfort



Controls

Solomatic® II System can be operated through a variety of control systems, from a simple hand-held transmitter to a master control or a building management system, depending on the time, position of the sun and the weather.

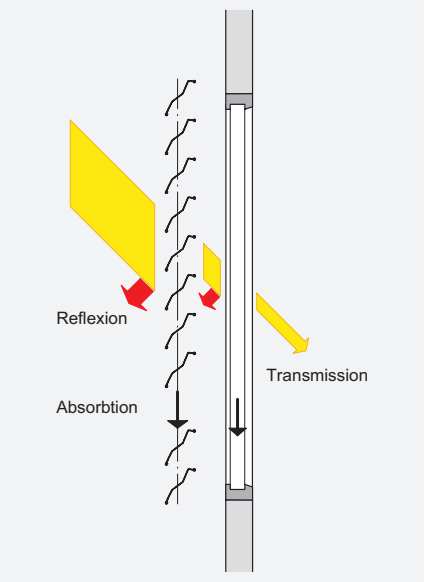

Thermal comfort

The ambient conditions change over the course of the day and during the seasons. With a blinds control device from Griesser, you can adjust your solar shading to match your personal requirements in accordance with changing exterior circumstances. And making these adjustments is so simple that you will still have time to take care of the important things in your life.

An optimal daylight concept makes artificial air conditioning superfluous in the summer. You save energy costs and may well also avoid one or another unwanted summer cold. In the winter, on the other hand, a solar shading system can protect you against cold and allow the scarce rays of the sun into the room, thus saving once again on energy costs, not to mention facial tissues.

Visual comfort

Having a sense of well-being also means being able to decide for oneself, particularly within one's own four walls, just how much one wants to reveal to the outside world. With Solomatic® II System, you are sheltered from uninvited glances from the outside world.



BiLine hand-held transmitter

BiLine - Remote control

The control system Griesser BiLine provides contemporary design and high functional security through routing technology. Wireless systems have the advantage of being installed quickly, not only in new buildings but also when refitting an automated system in existing buildings.



Centero Home for smartphone and tablet operation



KNX / gBUS home and building automation

The Griesser KNX and gBUS solar shading controls are integrated master controls with extensive functionalities for any building of any size. With proven functions such as solar tracking and horizon limitation, it meets the highest expectations for solar shading control.



KNX / gBUS controls per iPad







Technology in detail

Vertical section

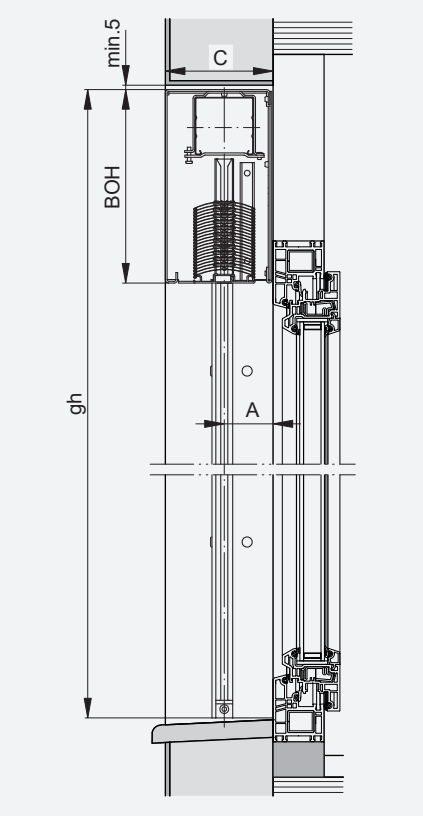

Solomatic® II System Box



System box

Box Fix made of profild aluminum, square, in four different box heights for connection with the guide rails and for the holder of the slat package and the fastening of the housing.

Box height

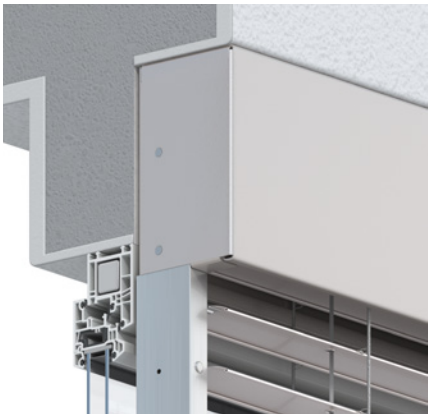

Box dimensions

Solomatic® II 70 System Box		Solomatic® II 80 System Box	
Total height gh	**Box height BOH**	**Total height gh**	**Box height BOH**
590–1490	190	630–1740	190
1491–2020	220	1741–2320	220
2021–2760	260	2321–3210	260
2761–3450	300	3211–4000	300
3451–4845	300[1)]	4001–4845	300[1)]
Depth of box C	121	Depth of box C	141

[1)] Slat package not fully covered

Lateral guide rails

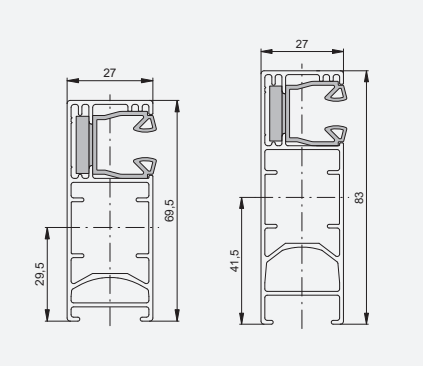

Guide rails

Fix guide rails made of extruded aluminum in two different depths for guiding the curtain and fastening the blinds to the side or to the rear. Embedded beading reduces transmission of the sounds of wind. The guide end prevents the curtain from falling in the event of damage.

	Solomatic® II 70 System Box	Solomatic® II 80 System Box
Deep guide rails	69,5	83

Vertical section

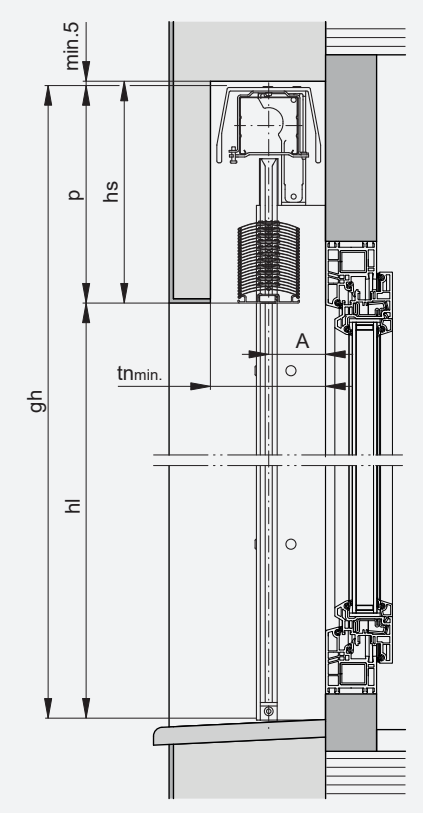

Support profil

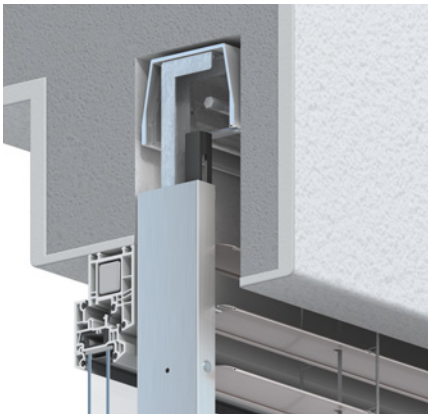

Lateral guide rails

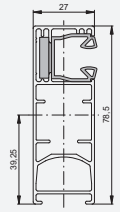

Solomatic® II System Profil



System profil for niche installation
Fix profil made of profild aluminum for fastening the housing.

Header dimensions

	Solomatic® II 70 System Profil	Solomatic® II 80 System Profil
Depth of niche (tn)	130	130
Opening height (hl)	**Header height (hs)**	
400–1000	180	185
1001–1250	200	190
1251–1500	215	200
1501–1750	225	215
1751–2000	240	225
2001–2250	255	240
2251–2500	270	250
2501–2750	285	260
2751–3000	295	275
3001–3250	320	285
3251–3500	330	300
3501–3750	345	310
3751–4000	355	325
4001–4500	390	350

Header dimensions are approximate values which may exhibit negative or positive deviations depending on the technical circumstances.

Guide rails
Fix guide rails, 27 x 78,5 mm, made of extruded aluminum for guiding the curtain and fastening the blinds to the side or to the rear. Embedded beading reduces transmission of the sounds of wind.

Limit dimensions Version Box

bk Width of construction (rear edge of guide rails)

Minimum	
Solomatic® II 70 System Box	600
Solomatic® II 80 System Box	600
Maximum	
Solomatic® II System Box	4000

Buildings and high-rise structures which are exposed to high wind should decrease this maximum value as required (see operating instructions).

gh Total height

Minimum	
Solomatic® II 70 System Box	590
Solomatic® II 80 System Box	630
Maximum	
Solomatic® II 70 System Box	4845
Solomatic® II 80 System Box	4845

bk × hl Maximum surface area

Single blind	
Solomatic® II System Box	15 m²

Solomatic® II System motorized only, no coupling possible.

Limit dimensions Version Profil

bk Width of construction (rear edge of guide rails)

Minimum	
Solomatic® II 70 System Profil	600
Solomatic® II 80 System Profil	600
Maximum	
Solomatic® II 70 System Profil	4500
Solomatic® II 80 System Profil	4500

Buildings and high-rise structures which are exposed to high wind should decrease this maximum value as required (see operating instructions).

hl Opening height

Minimum	
Solomatic® II 70 System Profil	400
Solomatic® II 80 System Profil	440
Maximum	
Solomatic® II 70 System Profil	4500
Solomatic® II 80 System Profil	4500

bk × hl Maximum surface area

Single blind	
Solomatic® II System Profil	15 m²

Solomatic® II System motorized only, no coupling possible.

Key

bk = Width of construction
gh = total height
hl = Opening height
p = Height of package
hs = Header height (p + min. 5)
tn = Depth of niche
All dimensions in mm.





Your partner:

Griesser solar shading – Quality since 1882.
www.griesser.com

MIX
Paper from responsible sources
FSC® C018740
FSC www.fsc.org

01.2024 – Subject to change without prior notice