GRIESSER

External venetian blinds from Griesser.
Solomatic® II



Solomatic® II

Solomatic® II is available in two versions: as Solomatic® II 80 and as Solomatic® II 70 for narrow installation conditions.



Guide system
Type L



Self-supporting



Built-in system



Front mounted
system





Adjusting cords with
Kevlar

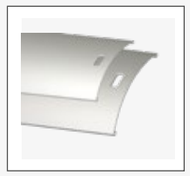

Two different slat
widths

Product-Highlights Solomatic® II

Operating position
(option)

Product advantages in detail

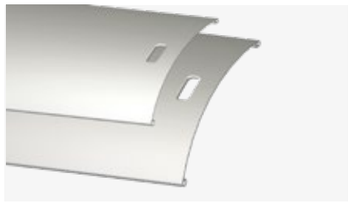

Two slat widths
Solomatic® II 80 meets the current installation standard for new buildings. Solomatic® II 70 is oriented towards the narrow installation situations encountered in renovations and retrofitting.



Operating position (option)
The shade produced when lowering the blinds is often annoying – particularly in the work place. The slat operating position of around 48 degrees prevents the room from getting dark when the blind is lowered.



Self-supporting with the slim guide Type L
The self-supporting blind design protects the insulation in the header and reduces service costs. The system needs no fastening for the housing for widths of up to 2500 mm – the insulation remains intact and noise transmission is reduced. The slim Type L fixed guide with a flexible beading stands out for being a low-cost and unobtrusive guide system with a high reliability.



Adjusting cords
Yellow Kevlar fibers ensure low stretch and shrinkage levels – the slat end remains in optimum condition for years.



Installation system
We offer you the Solomatic® II in two different installation versions. One for the header situation and one for the version with a screen.



Installation system with Box
Box made from extruded aluminum, transparently anodized or baked enamel finish, square or round.

Our color scheme

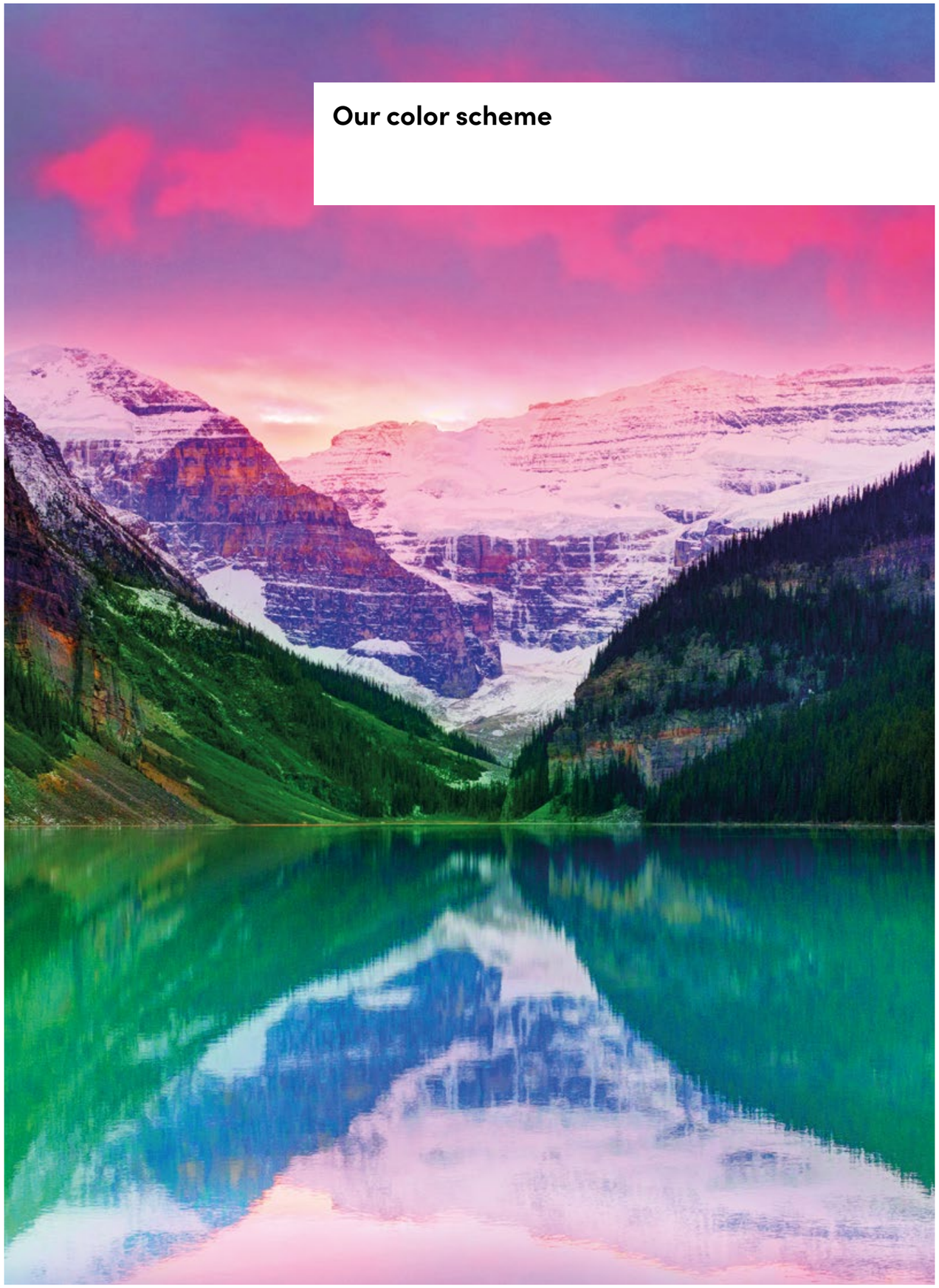

Our colors

Griesser Bestseller Colors

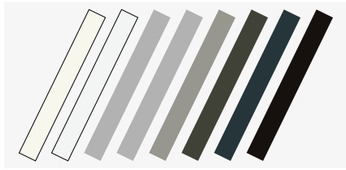

Surface structure
Semi-gloss

RAL 9010 | RAL 9016 | RAL 9006 | VSR 140 - Metallic

RAL 9007/VSR 907 | RAL 7022 | RAL 7016 | RAL 8019

Premium Colors



GriRal Colors
Our GriRal color collection has an assortment of 50 different RAL shades of color. From sand yellow to standard white, we offer a complete selection of hues for every color family. We're convinced that with our color palette, you will find exactly the right shade of color for your needs.



GriColors
The GriColors range includes 100 color shades in four collections, Glass & Stone, Sun & Fire, Water & Moss and Earth & Wood – from cool white and sunny red to natural blue and earthy brown.

Surface structure
Semi-gloss



BiColor
External venetian blinds get a new color accent: When bright color is dominant outside, a neutral light can optimize the shading function inside. Create your own preferred color combination using our two color collections, GriColors and GriRal (excluding standard colors).
The exterior color shows as a border along the edge of the interior view. Our color recommendations for interior colors: white (VSR 901), light gray (VSR 904) or medium gray (VSR 130).

Our comfort

Controls

Solomatic® II can be operated through a variety of control systems, from a simple hand-held transmitter to a master control or a building management system, depending on the time, position of the sun and the weather.

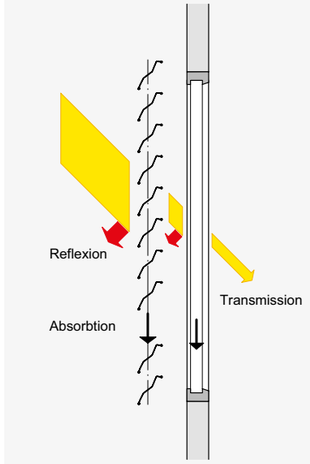

Thermal comfort

The ambient conditions change over the course of the day and during the seasons. With a blinds control device from Griesser, you can adjust your solar shading to match your personal requirements in accordance with changing exterior circumstances. And making these adjustments is so simple that you will still have time to take care of the important things in your life.

An optimal daylight concept makes artificial air conditioning superfluous in the summer. You save energy costs and may well also avoid one or another unwanted summer cold. In the winter, on the other hand, a solar shading system can protect you against cold and allow the scarce rays of the sun into the room, thus saving once again on energy costs, not to mention facial tissues.

Visual comfort

Having a sense of well-being also means being able to decide for oneself, particularly within one's own four walls, just how much one wants to reveal to the outside world. With Solomatic® II, you are sheltered from uninvited glances from the outside world.



BiLine hand-held transmitter

BiLine - Remote control

The control system Griesser BiLine provides contemporary design and high functional security through routing technology. Wireless systems have the advantage of being installed quickly, not only in new buildings but also when refitting an automated system in existing buildings.



Centero Home for smartphone and tablet operation



KNX / gBUS home and building automation

The Griesser KNX and gBUS solar shading controls are integrated master controls with extensive functionalities for any building of any size. With proven functions such as solar tracking and horizon limitation, it meets the highest expectations for solar shading control.



KNX / gBUS controls per iPad





Technology in detail

Vertical section: Example of header

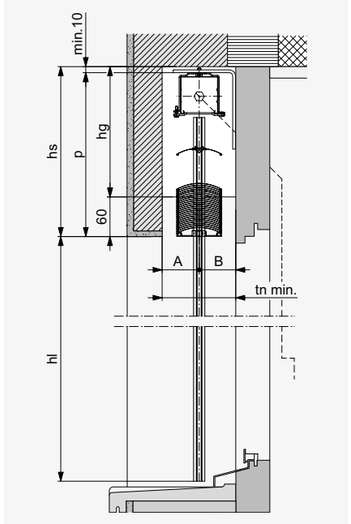

Installation system in header



Horizontal sections

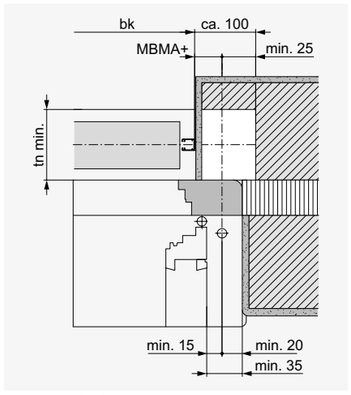

For crank drive

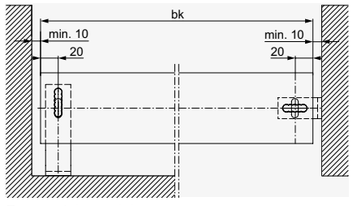

For guide cables

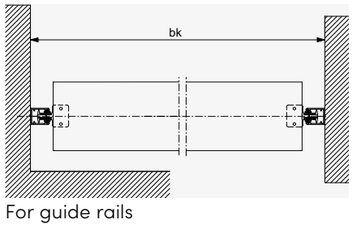

For guide rails

Horizontal section for crank drive

With recess (white) for gearbox (not necessary for motor drive). MBMA+ = Dimension from rear edge of guide rails to centre of drive. With gearbox in slat area: hs +20 mm. A dimensional tolerance of ±5 mm is observed for the header height.

Depth of niche

Type	tn	A	B
Solomatic® II 70	min. 100* mm	50 mm	50 mm
Solomatic® II 80	min. 120* mm	60 mm	60 mm

* + possible addition for protruding weatherboard or doorknobs.

Key

bk = Width of construction
hl = Opening height
gh = Total height
p = Height of package
hs = Header height (p + min. 10)
hg = Height of gearbox recess (hs -60)
tn = Depth of niche
All dimensions in mm.

Vertical section: Example of cover

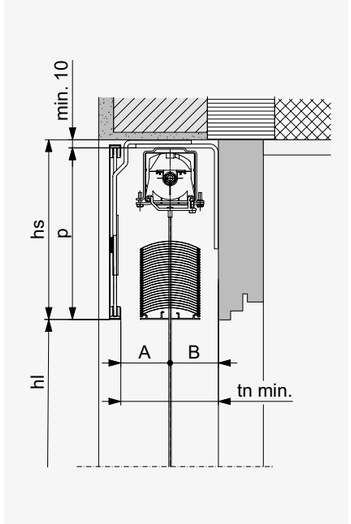

Installation system with cover



Vertical section: Example of box

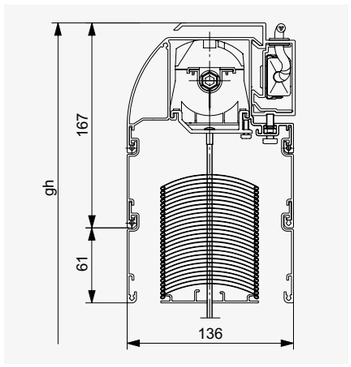

Box with slat package covered (standard)

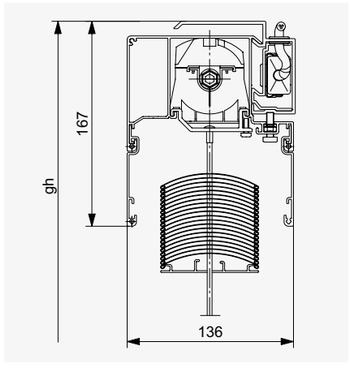

Box with slat package visible

Installation system with Box

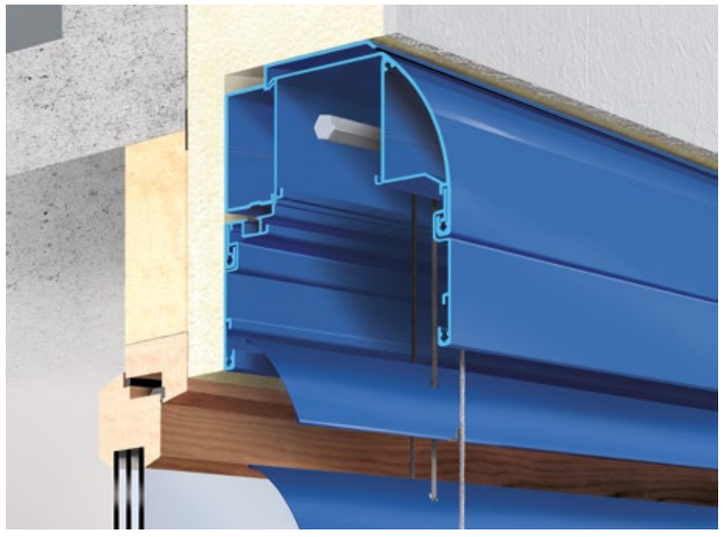

Solomatic® II Box
Box made from extruded aluminium,transparently anodized or baked enamel finish, square or round.

Version slat package covered (Standard)*
Box with extensions of 61 mm depending on height of package.

Version slat package visible*
For all those who prefer to show technology.

* For both Box versions: hs + 7 mm

Guide rails

Type L (for self-supporting system)

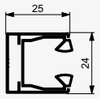

Type E



Type C



Type D

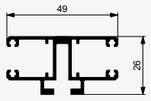

Type T

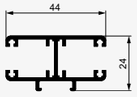

Guide cable



Limit dimensions

bk Width of construction (rear edge of guide rails)

Minimum	
crank drive	500
motor drive	600
Maximum	4500

Buildings and high-rise structures which are exposed to high wind should decrease this maximum value as required (see operating instructions).

hl Opening height

Minimum	
Solomatic® II 70	440
Solomatic® II 80	440
Maximum	4500

bk × hl Maximum surface area

Single blind	
with Crank drive	11 m²
with Motor drive	15 m²
Connected systems (Max. system width 10 m)	
with crank drive (max. 4 blinds)	11 m²
A max. of 2 blinds may be connected on each side of the gearbox.	
with motor drive (max. 4 blinds)	24 m²

For 3 or 4 blinds, the motor should be positioned in the center.

Header dimensions

Opening height (hl)	Header height (hs)	
	Solomatic® II 80	Solomatic® II 70
400–1000	185	180
1001–1250	205	210
1251–1500	205	210
1501–1750	230	240
1751–2000	230	240
2001–2250	255	270
2251–2500	255	270
2501–3000	280	310
3001–3500	300	340
3501–4000	325	370
4001–4500	350	390

Solomatic® II Box system +7 mm.
Header dimensions are approximate values which may exhibit negative or positive deviations depending on the technical circumstances.



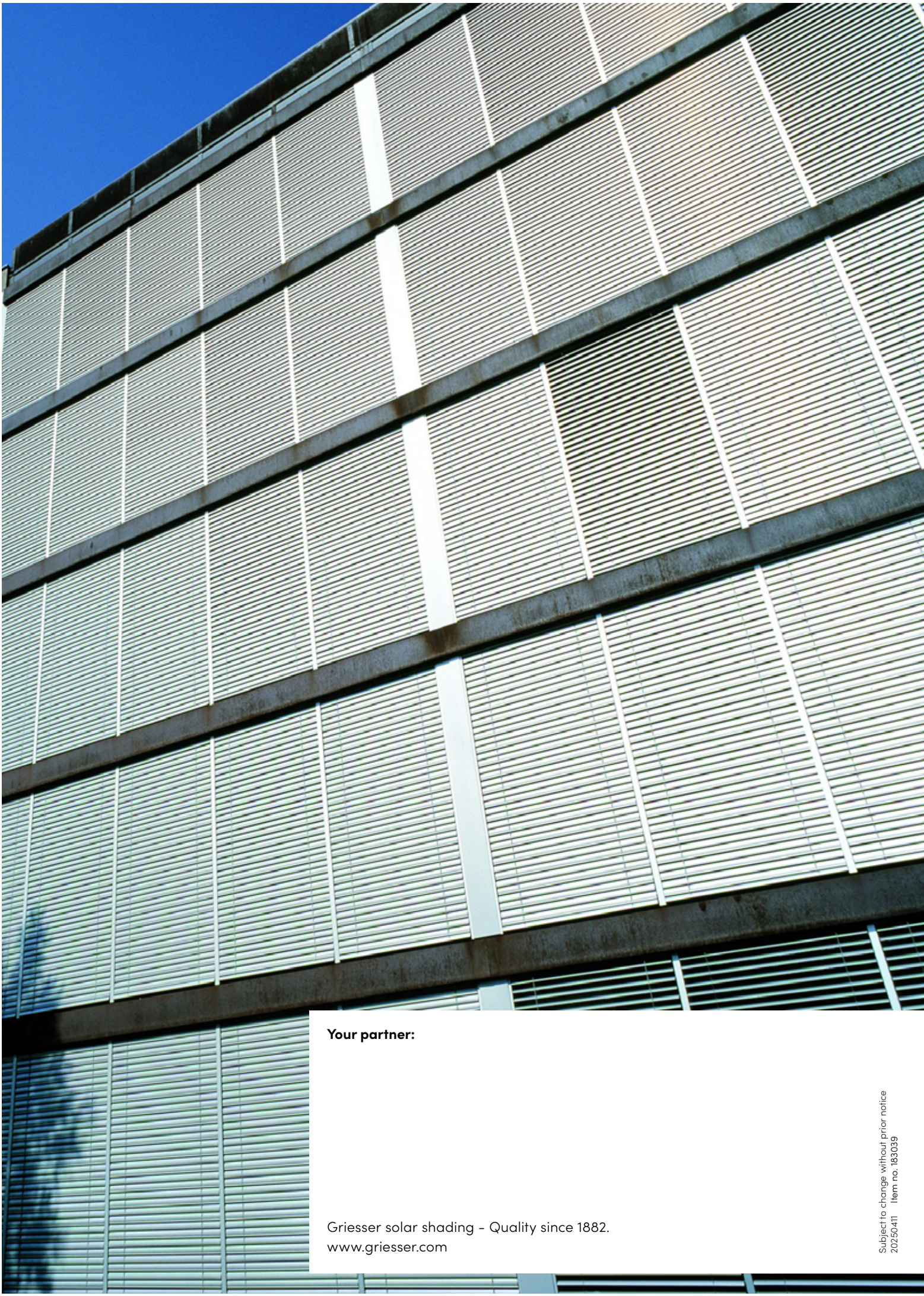

Your partner:

Griesser solar shading – Quality since 1882.
www.griesser.com

Subject to change without prior notice
20250411 Item no. 183039